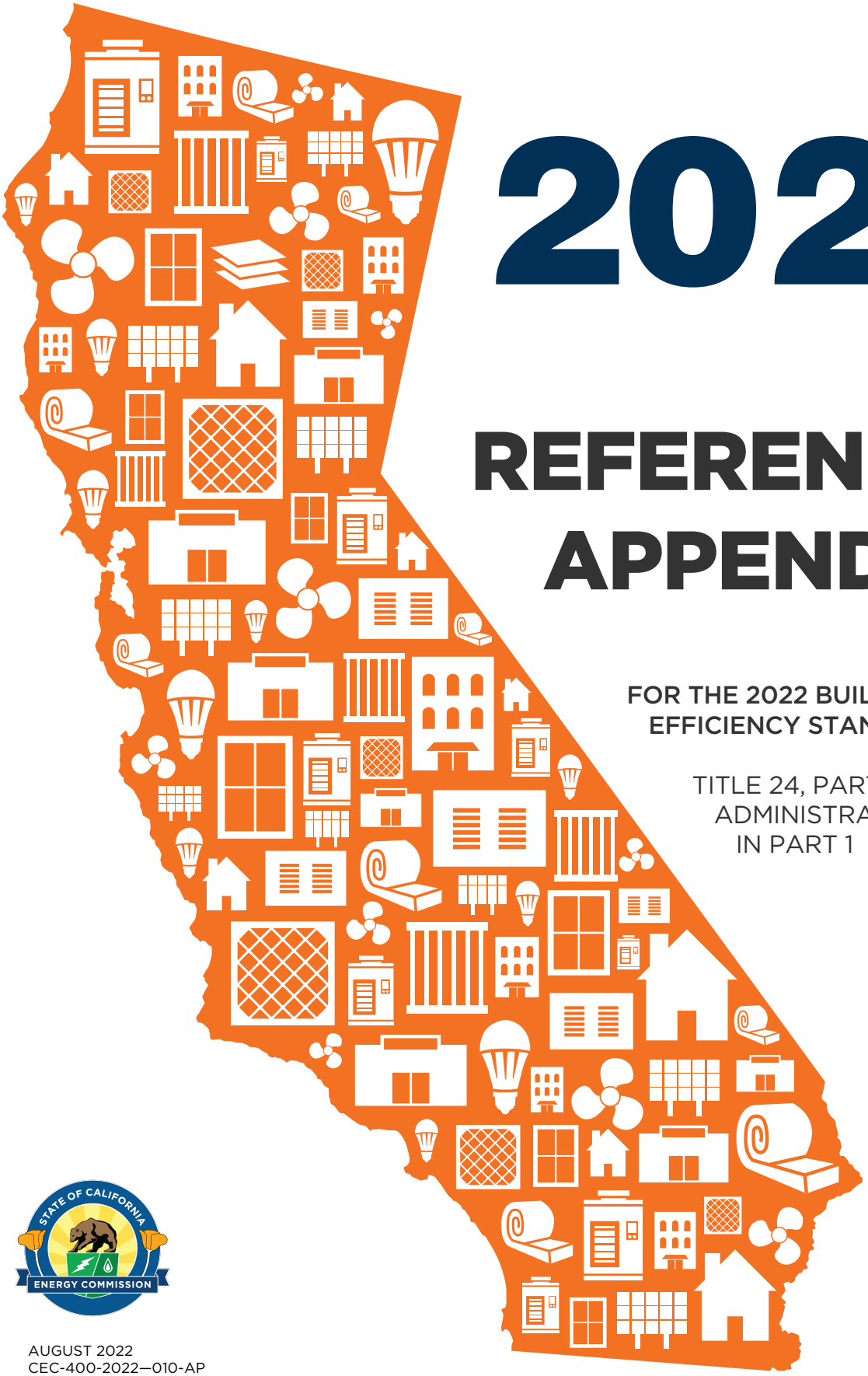

2022

REFERENCE APPENDICES

FOR THE 2022 BUILDING ENERGY EFFICIENCY STANDARDS

TITLE 24, PART 6, AND ASSOCIATED ADMINISTRATIVE REGULATIONS IN PART 1

AUGUST 2022
CEC-400-2022—010-AP

CALIFORNIA ENERGY COMMISSION
Gavin Newsom, Governor

California Energy Commission

David Hochschild
Chair

Commissioners
Karen Douglas, J.D.
Siva Gunda
J. Andrew McAllister, Ph.D.
Patty Monahan

Payam Bozorgchami, P.E.
Project Manager

Will Vicent
Office Manager
Building Standards Office

Michael J. Sokol
Deputy Director
Efficiency Division

Drew Bohan
Executive Director

DISCLAIMER

Staff members of the California Energy Commission prepared this report. As such, it does not necessarily represent the views of the Energy Commission, its employees, or the State of California. The Energy Commission, the State of California, its employees, contractors and subcontractors make no warrant, express or implied, and assume no legal liability for the information in this report; nor does any party represent that the uses of this information will not infringe upon privately owned rights. This report has not been approved or disapproved by the Energy Commission nor has the Commission passed upon the accuracy or adequacy of the information in this report.

This page intentionally left blank.

ACKNOWLEDGEMENTS

We would like to acknowledge the following staff and leaders:

Leadership - Commissioner Andrew McAllister and his advisor, Bill Pennington, for unwavering leadership throughout the standards development process; Payam Bozorgchami, P.E., senior engineer and overall project manager; Maziar Shirakh, P.E., senior engineer and building decarbonization lead; Haile Bucaneg, senior engineer and lead for mechanical measures; Javier Perez, senior specialist and lead for multifamily measures; Peter Strait, supervisor of the Standards Development Unit and interim acting manager of the Building Standards Office; Che Geisler, supervisor of the Standards Tools Unit; Chris Olvera, supervisor of the Outreach & Education Unit; and Will Vicent, manager of the Building Standards Office.

Legal Counsel - Under the leadership of the chief counsel, Linda Barrera, the following staff provided legal counsel: James Qaqundah; Matt Chalmers; Michael Murza; Justin Delacruz; and Josephine Crosby.

Efficiency Division Staff - In the Building Standards Office: Thao Chau, P.E.; Cheng Moua, P.E.; Simon Lee, P.E.; Jeff Miller, P.E.; Ronald Balneg; Danuta Drozdowicz, Adrian Ownby; Michael Shewmaker; Alexis Markstrum; Danny Tam; RJ Wichert; Haider Alhabibi; Amie Brousseau; and Allen Wang. In the Standards Compliance Office: Lorraine White, Joe Loyer; Matthew Haro, P.E.; and Daniel Wong, P.E. The following staff provided administrative support and editing: Christine Collopy; Corrine Fishman; Amber Beck; Tajanee Ford-Whelan; and Mary Trojan.

Energy Commission Consultants - Key consultants include NORESCO, Bruce Wilcox, the California Statewide Codes and Standards Program – which is funded by California utility customers and administered by Pacific Gas and Electric Company, Southern California Edison Company, San Diego Gas and Electric Company, Los Angeles Department of Water and Power, and Sacramento Metropolitan Utility District, under the auspices of the California Public Utilities Commission – and their consultants. We would also like to acknowledge the California Energy Alliance for the submission of their code change proposal relating to lighting in existing buildings.

ABSTRACT

Serving as a precursor to the first generation of building standards, the Department of Housing and Community Development adopted rudimentary energy conservation standards under their State Housing Law authority in 1975. However, the Warren-Alquist Act was passed one year earlier with explicit direction to the California Energy Commission (CEC, formally titled the State Energy Resources Conservation and Development Commission) to adopt and implement standards.

The Building Energy Efficiency Standards (Energy Code) were first adopted in 1976 by the CEC and have been updated periodically since then, as directed by statute. The CEC's statute created separate authority and specific direction regarding what the standards are to address, development criteria, and provided implementation tools, aids, and technical assistance.

The Energy Code contains energy and water efficiency requirements (and indoor air quality requirements) for newly constructed buildings, additions to existing buildings, and alterations to existing buildings. Public Resources Code Sections 25402 subdivisions (a)-(b) and 25402.1 emphasize the importance of building design and construction flexibility by requiring the CEC to establish performance standards, in the form of an "energy budget" in terms of the energy consumption per square foot of floor space. For this reason, the Energy Code includes both a prescriptive option, allowing builders to comply by using methods known to be efficient, and a performance option, allowing builders complete freedom in their designs provided the building achieves the same overall efficiency as an equivalent building using the prescriptive option. Reference Appendices are adopted along with the Energy Code that contain data and other information that helps builders comply.

The 2022 Energy Code development and adoption process continues a long-standing practice of combining technical rigor, challenging but achievable design and construction practices, public engagement, and full consideration of the views of stakeholders.

The 2022 Energy Code builds on California's technology innovations, encouraging energy efficient approaches to encourage building decarbonization, emphasizing in particular on heat pumps for space heating and water heating. This set of Energy Codes also extends the benefits of photovoltaic and battery storage systems and other demand flexible technology to work in combinations with heat pumps to enable California buildings to be responsive to climate change. This Energy code also strengthens ventilation standards to improve indoor air quality. This update provides crucial steps in the state's progress toward 100 percent clean carbon neutrality by midcentury.

Public Resources Code Section 25402.1 also requires the CEC to support the performance standards with compliance tools for builders and building designers. The Alternative Calculation Method (ACM) Approval Manual adopted by regulation as an appendix of the Energy Code establishes requirements for input, output, and calculational uniformity in the computer programs used to demonstrate compliance. From this, the CEC develops and makes publicly available free, public domain building modeling software in order to enable compliance based on modeling of building efficiency and performance. The ACM Approval Manual also includes provisions for private entities seeking to develop

compliance software for approval by the CEC, which further encourages flexibility and innovation.

The Energy Code is conceptually divided into three basic sets. First, there is a basic set of mandatory requirements that apply to all buildings. Second, there is a set of performance standards – the energy budgets – that vary by climate zone (of which there are 16 in California) and building type; thus the Energy Code are tailored to local conditions, and provide flexibility in how energy efficiency in buildings can be achieved. Finally, the third set constitutes an alternative to the performance standards, which is a set of prescriptive packages that provide a recipe or a checklist compliance approach.

Keywords:

California Energy Commission	Performance	HVAC
California Building Code	Time Dependent	Building Commissioning
California Building Energy Efficiency Standards	Valuation	Process Load
Title 24, Part 6	TDV	Refrigeration
Building Energy Efficiency Standards	Ducts in Conditioned Spaces	Data Center
Residential	High Performance Attics	Exhaust
Nonresidential	High Performance Walls	Compressed Air
Newly Constructed	High Efficacy Lighting	Acceptance Testing
Additions and Alterations to Existing Buildings	Water Heating	Data Collection
Mandatory	Windows	Cool Roof
Prescriptive	Envelope Insulation	On-site Renewable
Source Energy	Controlled Environment Horticulture (CEH)	Fan Energy Index (FEI)

This page intentionally left blank

Joint Appendix JA1

APPENDIX JA1 – Definitions

Terms, phrases, words and their derivatives in the Reference Appendices shall be defined as specified in Title 24, Part 6, Section 100.1. Below are additional definitions for terms used in the Reference Appendices and not defined in Title 24, Part 6.

ACM See Alternative Calculation Method in Section 100.1 of Title 24, Part 6.

ACP See Alternative Component Package.

AFUE See Annual Fuel Utilization Efficiency in Section 100.1 of Title 24, Part 6.

AIR LEAKAGE ~~I~~is a measure of how much outside air comes into a home or building through a manufactured fenestration or exterior door products.

AIR POROSITY is a measure of the air-tightness of infiltration barriers in units of cubic feet per hour per square foot per inch of mercury pressure difference.

AIRFLOW ACROSS THE EVAPORATOR is the rate of airflow, usually measured in cfm across a heating or cooling coil. The efficiency of air conditioners and heat pumps is affected by the airflow across the evaporator (or condenser in the case of a heat pump).

ALTERNATIVE CALCULATION METHOD (ACM) REFERENCE MANUAL or ACM REFERENCE MANUAL contains the specific procedures to implement Sections 140.1 and 150.1 of Title 24, Part 6 of the California Code of Regulations in Compliance Software.

ALTERNATIVE COMPONENT PACKAGE is a set of building measures whose aggregate calculated energy use is less than or equal to the maximum allowed Energy Budget.

ANSI C78.377 is the American National Standards Institute document titled "Specifications for the Chromaticity of Solid State Lighting Products." (ANSI C78.377-2017).

ANSI C79.1 is the American National Standards Institute document titled "Nomenclature for Glass Bulbs Intended for Use with Electric Lamps." (ANSI C79.1-2002).

ANSI C82.2 is the American National Standard for Lamp Ballasts –Method of Measurement for Fluorescent Lamp Ballasts (ANSI C82.2-2002(R2016)).

ANSI C82.77 is the American National Standard for Harmonic Emission Limits - Related Power Quality Requirements for Lighting Equipment (ANSI C82.77-2002).

APPLIANCE STANDARDS are the Standards contained in the Appliance Efficiency Regulations.

APPROVED as to a home energy rating provider or home energy rating system, ~~is~~ means reviewed and approved by the Commission under Title 20, Section 1675 of the California Code of Regulations.

APPROVED BY THE COMMISSION means approval under Section 25402.1 of the Public Resources Code.

APPROVED CALCULATION METHOD is compliance software, or alternative component packages, or exceptional methods approved under Section 10-109.

AREAL HEAT CAPACITY See Heat Capacity.

AHRI is the Air-Conditioning, Heating and Refrigeration Institute.

AHRI 210/240 is the Air-conditioning, Heating, and Refrigeration Institute document titled "Performance Rating of Unitary Air-Conditioning and Air-Source Heat Pump Equipment," 2008 (ANSI/AHRI Standard 210/240-2017 with Addenda 1).

AHRI 310/380 is the Air-Conditioning, Heating, and Refrigeration Institute document titled "Standard for Packaged Terminal Air-Conditioners and Heat Pumps (CSA-C744-17)," 2017 (AHRI 310/380-2017).

AHRI 340/360 is the Air-Conditioning, Heating and Refrigeration Institute document titled "Performance Rating of Commercial and Industrial Unitary Air-Conditioning and Heat Pump Equipment," 2019 (AHRI Standard 340/360-(I-P) 2019).

AHRI 365 is the Air-Conditioning, Heating and Refrigeration Institute document titled "Commercial and Industrial Unitary Air-Conditioning Condensing Units," 2009 (ANSI/AHRI Standard 365 (I-P)-2009).

AHRI 390 is the Air-Conditioning, Heating and Refrigeration Institute document titled "Performance Rating of Single Package Vertical Air-Conditioners and Heat Pumps," 2003 (ANSI/AHRI Standard 390-2003).

AHRI 400 is the Air-Conditioning, Heating and Refrigeration Institute document titled "Liquid to Liquid Heat Exchangers," 2015 (ANSI/AHRI Standard 400 (I-P)-2015)

AHRI 460 is the Air-Conditioning, Heating and Refrigeration Institute document titled "Performance Rating of Remote Mechanical-Draft Air-Cooled Refrigerant Condensers," 2005 (ANSI/AHRI Standard 460-2005).

AHRI 550/590 is the Air-Conditioning, Heating and Refrigeration Institute document titled "Performance Rating of Water Chilling Packages Using the Vapor Compression Cycle," 2020 (AHRI Standard 550/590(I-P)-2020).

AHRI 560 is the Air-Conditioning, Heating and Refrigeration Institute document titled "Absorption Water Chilling and Water Heating Packages," 2000 (AHRI Standard 560-2000).

AHRI 680 is the Air-Conditioning, Heating and Refrigeration Institute document titled "Performance Rating of Residential Air Filter Equipment," 2017 (AHRI Standard 680 (I-P)-2017).

AHRI 1230 is the Air-Conditioning, Heating and Refrigeration Institute document titled "Performance Rating of Variable Refrigerant Flow (VRF) Multi-Split Air-Conditioning and Heat Pump Equipment," 2014 (AHRI Standard 1230-2014) with Addendum 1.

ASHRAE is the American Society of Heating, Refrigerating, and Air-conditioning Engineers.

ASHRAE CLIMATIC DATA FOR REGION X is the American Society of Heating, Refrigerating and Air-Conditioning Engineers document titled "ASHRAE Climatic Data for Region X, Arizona, California, Hawaii and Nevada," Publication SPCDX, 1982 and "Supplement," 1994.

ASHRAE HANDBOOK, APPLICATIONS VOLUME is the American Society of Heating, Refrigerating and Air-Conditioning Engineers document titled "ASHRAE Handbook: Heating, Ventilating, and Air-Conditioning Applications" (I-P)(2019).

ASHRAE HANDBOOK, EQUIPMENT VOLUME is the American Society of Heating, Refrigerating and Air-Conditioning Engineers document titled "ASHRAE Handbook: Heating, Ventilating, and Air-Conditioning Systems and Equipment" (I-P)(2020).

ASHRAE HANDBOOK, FUNDAMENTALS VOLUME is the American Society of Heating, Refrigerating and Air-Conditioning Engineers document titled "ASHRAE Handbook: Fundamentals" (I-P)(2017).

ASHRAE STANDARD 52.2 is the American Society of Heating, Refrigerating and Air-Conditioning Engineers document titled "Method of Testing General Ventilation Air-Cleaning Devices for Removal Efficiency by Particle Size," 2017 (ANSI/ASHRAE Standard 52.2-2017).

ASHRAE STANDARD 55 is the American Society of Heating, Refrigerating and Air-Conditioning Engineers document titled " Thermal Environmental Conditions for Human Occupancy," 2020 (ASHRAE Standard 55-2020).

ASHRAE STANDARD 62.2 is the American Society of Heating, Refrigerating and Air-Conditioning Engineers document titled "Ventilation and Acceptable Indoor Air Quality in Low-Rise Residential Buildings," 2019 (ANSI/ASHRAE Standard 62.2-2019 including ANSI/ASHRAE Addenda v and published in the 2020).

ASHRAE STANDARD 193 is the American Society of Heating, Refrigerating and Air-Conditioning Engineers document titled "Method of Test for Determining the Airtightness of HVAC Equipment," R2014 (ANSI/ASHRAE Standard 193-RA2014).

ASTM E2357 is the American Society for Testing and Materials document titled, "Standard Test Method for determining air leakage Rate of air barrier assemblies" 2018 (ASTM E2357-18).

AUTO REPAIR See Nonresidential Functional Area or Type of Use.

AUTOMATIC is capable of operating without human intervention.

BACK is the back side of the building as one faces the front façade from the outside (see Front). This designation is used on the Certificate of Compliance (CF-1R form) to indicate the orientation of fenestration (e.g., Back-West).

BATTERY SYSTEM, STATIONARY STORAGE. A rechargeable energy storage system consisting of electrochemical storage batteries, battery chargers, controls, and associated electrical equipment designed to provide electrical power to a building. The system is typically used to provide standby or emergency power, and uninterruptable power supply, load shedding, load sharing or similar capabilities.

BRITISH THERMAL UNIT (BTU) is the amount of heat needed to raise the temperature of one pound of water one degree Fahrenheit.

BTU/H is the amount of heat in Btu that is removed or added during one hour. Used for measuring heating and cooling equipment output.

BUILDER is the general contractor responsible for construction.

BUILDING ENERGY EFFICIENCY STANDARDS are the California Building Energy Efficiency Standards as set forth in the California Code of Regulations, Title 24, Part 6, also known as the California Energy Code.

BUILDING LOCATION DATA is the specific outdoor design temperatures shown in Reference Joint Appendix JA2 used in calculating heating and cooling loads for the particular location of the building.

BUILDING OWNER is the owner of the building or dwelling unit.

BUILDING PERMIT is an electrical, plumbing, mechanical, building, or other permit or approval, that is issued by an enforcement agency, and that authorizes any construction that is subject to Part 6.

BUILDING TYPES is the classification of buildings defined by the CBC and applicable to the requirements of the Building Energy Efficiency Standards.

CALIFORNIA ELECTRICAL CODE is the 2019 California Electrical Code.

CALIFORNIA ENERGY CODE See Building Energy Efficiency Standards.

CALIFORNIA ENERGY COMMISSION Is the California State Energy Resources Conservation and Development Commission.

CALIFORNIA FLEXIBLE INSTALLATION (CFI) is a set of criteria that allows a PV system to be modeled under the performance method without providing more specific orientations and tilts. In order to meet the requirements of CFI, the PV system must be installed with an azimuth ranging from 150 to 270 degrees from true north, with all modules at the same tilt as the roof pitches between 0:12 and 7:12. Additionally, each system must also meet minimal shading criterion outlined in JA11.3.

CALIFORNIA PUBLIC UTILITIES COMMISSION (CPUC) RULE 21 is the CPUC rule that that describes the interconnection, operating and metering requirements for generation facilities to be connected to a utility's distribution system.

CBC is the 2019 California Building Code.

CEILING is the interior upper surface of a space separating it from an attic, plenum, indirectly or directly conditioned space or the roof assembly, which has a slope less than 60 degrees from horizontal.

CERTIFICATE OF COMPLIANCE is a document with information required by the Commission that is prepared by the Documentation Author that indicates whether the building includes measures that require field verification and diagnostic testing.

CERTIFICATE OF INSTALLATION is a document with information required by the Commission that is prepared by the builder or installer verifying that the measure was installed to meet the requirements of the Standards.

CERTIFICATE OF VERIFICATION is a document with information required by the Commission that is prepared by the HERS Rater to certify that measures requiring field verification and diagnostic testing comply with the requirements.

CERTIFICATION is certification by the manufacturer to the Commission, as specified the Appliance Efficiency Regulations, that the appliance complies with the applicable standard for that appliance. The term certification is also used in other ways in the standards. Many of the compliance forms are certificates, whereby installers, HERS testers and others certify that equipment was correctly installed and/or tested.

CERTIFIED as to a home energy rater, is having been found by a certified home energy rating provider to have successfully completed the requirements established by that home energy rating provider.

CIE 53 is the International Commission on Illumination (Commission Internationale de l'Eclairage) document titled "Methods of Characterizing the Performance of Radiometers and Photometers," (CIE 053-1982).

COLOR RENDERING INDEX (CRI) is a measure of the degree of color shift that objects undergo when illuminated by the lighting source as compared with the color of the same objects when illuminated by a reference source of comparable color temperature. CRI is calculated according to CIE 13.3.

CORRELATED COLOR TEMPERATURE (CCT) is the absolute temperature of a blackbody whose chromaticity most nearly resembles that of the light source.

CODES, CFR is the Code of Federal Regulations.

CLTD is the Cooling Load Temperature Difference.

COMBINATION SPACE-HEATING AND WATER-HEATING APPLIANCE is an appliance that is designed to provide both space heating and water heating from a single primary energy source.

COMBINED HYDRONIC SPACE/WATER HEATING SYSTEM is a system which both domestic hot water and space heating is supplied from the same water heating equipment. Combined hydronic space heating may include both radiant floor systems and convective or fan coil systems.

COMPLIANCE APPROACH is any one of the allowable methods by which the design and construction of a building may be demonstrated to be in compliance with Part 6. The compliance approaches are the performance compliance approach and the prescriptive compliance approach. The requirements for each compliance approach are set forth in §100.0(e)2 of Part 6.

COMPLIANCE DOCUMENTS are any of the documentation specified in §10-103(a) utilized to demonstrate compliance with Part 6 (i.e. Certificate of Compliance, Certificate of Installation, Certificate of Acceptance, and Certificate of Verification).

COMPLIANCE OPTION is a method or procedure for demonstrating compliance with Title 24, Part 6 and Part 11, Division 4.2 and 5.2 of the California Code of Regulations through modifications of approved calculation methods.

CONDITIONED FOOTPRINT is a projection of all conditioned space on all floors to a vertical plane. The conditioned footprint area may be equal to the first floor area, or it may be greater, if upper floors project over lower floors. One way to think of the conditioned footprint area is as the area of the largest conditioned floor in the building plus the conditioned floor area of any projections from other stories that extend beyond the outline of that largest floor.

CONSTRUCTION LAYERS are roof, wall and floor constructions which represent an assembly of layers. Some layers are homogeneous, such as gypsum board and plywood sheathing, while other layers are non-homogeneous such as the combination of wood framing and cavity insulation typical in many buildings.

CONTINUOUS AIR BARRIER See Air Barrier.

CONTROLLED VENTILATION CRAWL SPACE (CVC) is a crawl space in a residential building where the side walls of the crawlspace are insulated rather than the floor above the crawlspace. A CVC has automatically controlled crawl space vents. Credit for a CVC is permitted for low-rise residential buildings that use the performance approach to compliance.

COOL ROOF RATING COUNCIL (CRRC) is a not-for-profit organization designated by the Commission as the Supervisory Entity with responsibility to rate and label the reflectance and emittance of roof products.

COOLING COIL AIRFLOW Is the air flow through the evaporator (indoor) coil of a direct expansion air conditioning unit in cooling mode. The air flow is expressed in cubic feet per minute (CFM) or liter per second (L/S) of standard air (standard air has a density of 0.075 lb/ft^3).

COOLING LOAD is the rate at which heat must be extracted from a space to maintain a desired room condition.

COOLING LOAD TEMPERATURE DIFFERENCE (CLTD) is an equivalent temperature difference used for calculating the instantaneous external cooling loads across a wall or roof. The cooling load is the CLTD x U-factor x Area.

COP See Coefficient of Performance in Section 100.1 of Title 24, Part 6.

COURTYARD is an open space through one or more floor levels surrounded by walls within a building.

CRRC See Cool Roof Rating Council.

CUSTOM ENERGY BUDGET See Energy Budget.

DATA REGISTRY is a web service with a user interface and database maintained by a Registration Provider that complies with the applicable requirements in Reference Joint Appendix JA7, with guidance from the Data Registry Requirements Manual, and provides for registration of residential or nonresidential compliance documentation used for demonstrating compliance with Part 6.

> **RESIDENTIAL DATA REGISTRY** is a data registry that is maintained by a HERS Provider that provides for registration when required by Part 6 of all residential compliance documentation and the nonresidential Certification of Verification.

NONRESIDENTIAL DATA REGISTRY is a data registry that is maintained by the Registration Provider approved by the Commission that provides for registration, when required by Part 6, of all nonresidential documentation, excluding all Certificates of Acceptance recorded by an acceptance test technician certification provider (10-103.1 and 10-103.2). However, nonresidential data registries may not provide for registration of nonresidential Certificate of Verification.

DATA REGISTRY REQUIREMENTS MANUAL is a document that provides additional detailed guidance regarding the functional and technical aspects of the Data Registry requirements given in Reference Joint Appendix JA7.

DEMISING WALL is a wall that is a demising partition.

DENSITY is the mass per unit volume of a construction material as documented in an ASHRAE handbook, a comparably reliable reference or manufacturer's literature.

DEPLETABLE SOURCES is energy obtained from electricity purchased from a public utility, or energy obtained from burning coal, oil, natural gas, or liquefied petroleum gases.

DIRECTLY CONDITIONED SPACE is an enclosed space that is provided with wood heating, is provided with mechanical heating that has a capacity exceeding 10 Btu/(hr.×ft.^{2}), or is provided with mechanical cooling that has a capacity exceeding 5 Btu/(hr.xft.^{2}), unless the space-conditioning system is designed and thermostatically controlled to maintain a process environment temperature less than 55°F or to maintain a process environment temperature greater than 90°F for the whole space that the system serves, or unless the space-conditioning system is designed and controlled to be incapable of operating at temperatures above 55°F or incapable of operating at temperatures below 90°F at design conditions.

DIVIDERS are wood, aluminum or vinyl glazing dividers including mullions, muntins, munnions and grilles. Dividers may truly divide lights, be between the panes, or be applied to the exterior or interior of the glazing.

DOCUMENTATION AUTHOR is a person who prepares a Title 24, Part 6 document that must subsequently be reviewed and signed by a responsible person in order to certify compliance with Part 6.

DOMINANT OCCUPANCY is the occupancy type in mixed occupancy buildings with the greatest percentage of total conditioned floor area.

DUCT LOSSES is heat transfer into or out of a space conditioning system duct through conduction or leakage.

ENTIRELY NEW OR REPLACEMENT DUCT SYSTEMS installed as part of an alteration of a dwelling unit's space conditioning system(s) shall be constructed of at least 75% new duct material and may include reused parts from the dwelling unit's existing duct system (e.g. registers, boots, air handler, coil, plenums, duct material, etc.) but only if the reused parts are accessible and they can be sealed to prevent leakage.

EDGE OF GLASS is the portion of fenestration glazing that is within two and one half inches of the spacer.

EER See Energy Efficiency Ratio in Section 100.1 of Title 24, Part 6.

ELECTRIC HEATING is an electrically powered heating source, such as electric resistance, heat pumps with no auxiliary heat or with electric auxiliary heat, solar with electric back-up, etc.

ELECTRIC RESISTANCE HEATING is a heating system that converts electric energy directly into heat energy by passing a current through an electric resistance. Electric resistance heat is inherently less efficient than gas as a heating energy source because it must account for losses associated with generation from depletable fossil fuels and transmission to the building site.

ENERGY EFFICIENCY STANDARDS See Building Energy Efficiency Standards.

ENERGY STAR Start Time Test Method is the ENERGY STAR program document entitled "ENERGY STAR Program Requirements for Lamps Version 1.0 – Start Time Test Method – Final" (August-2013).

ENERGY STAR Ambient Temperature Life Test Method is the ENERGY STAR program document entitled "ENERGY STAR Program Requirements for Lamps Version 1.0 - Ambient Temperature Life Test Method – Final" (August-2013).

ENERGY STAR Elevated Temperature Light Output Ratio Test Method is the ENERGY STAR program document entitled "ENERGY STAR Program Requirements for Lamps Version 1.0 – Elevated Temperature Light Output Ratio Test Method – Final" (August-2013).

ENERGY STAR Elevated Temperature Life Test Method is the ENERGY STAR program document entitled "ENERGY STAR Program Requirements for Lamps Version 1.0 – Elevated Temperature Life Test Method – Final" (August-2013).

ENERGY STAR Product Specification for Lamps Noise Recommended Practice is the ENERGY STAR program document entitled, "ENERGY STAR Program Requirements for Lamps Version 1.0 – Noise Recommended Practice – Final" (August-2013).

EVAPORATIVE COOLER provides cooling to a building by either direct contact with water (direct evaporative cooler), no direct contact with water (indirect evaporative cooler), or a combination of direct and indirect cooling (indirect/direct evaporative cooler). The credit offered for evaporative coolers depends on building type and climate.

EXCEPTIONAL METHOD is a method for estimating the energy performance of building features that cannot be adequately modeled using the public domain computer programs and that is approved by the Executive Director.

EXECUTIVE DIRECTOR is the Executive Director of the Commission.

EXPOSED THERMAL MASS is mass that is directly exposed (uncovered) to the conditioned space of the building. Concrete floors that are covered by carpet are not considered exposed thermal mass.

CENTER OF GLASS U-FACTOR is the U-factor for the glass portion only of vertical or horizontal fenestration and is measured at least two and one half inches from the frame. Center of glass U-factor does not consider the U-factor of the frame.

FAÇADE is the contiguous exterior of a building surface, but not limited to fenestration products.

SIDE FINS are vertical shading elements mounted on either side of a glazed opening that can protect the glazing from lateral low angle sun penetration.

LOW-E COATING is a low emissivity metallic coating applied to glazing in fenestration products. See Soft Coat and Hard Coat.

(a) **HARD COAT** is a low emissivity metallic coating applied to the glass, which will be installed in a fenestration product, through a pyrolytic process (at or near the melting point of the glass so that it bonds with the surface layer of glass). Hard coatings are less susceptible to oxidation and scratching as compared to soft coats. Hard coatings generally do not have as low emissivity as soft coats.

(b) **SOFT COAT** is a low emissivity metallic coating applied to glass, which will be installed in a fenestration product through a sputter process where molecules of metals such as stainless steel or titanium are sputtered onto the surface of glass. Soft coats generally have lower emissivity than hard coats.

OPERABLE is fenestration that is designed to be opened or closed.

SOLAR HEAT GAIN COEFFICIENT, CENTER OF GLAZING (SHGCc) is the SHGC for the center of glazing area.

SOLAR HEAT GAIN COEFFICIENT, TOTAL FENESTRATION PRODUCT (SHGC or SHGCT) is the SHGC for the total fenestration product.

U-FACTOR, CENTER OF GLAZING (Uc) is the U-Factor for the center of glazing area.

U-FACTOR, TOTAL FENESTRATION PRODUCT (U_t) is the U-Factor for the total fenestration product.

VISIBLE TRANSMITTANCE, CENTER OF GLAZING (VTC) the VT for the center of glazing area.

VISIBLE TRANSMITTANCE, TOTAL FENESTRATION PRODUCT (VT or VTt) is the VT for the total fenestration product.

WINDOW FILM is fenestration attachment products which consist of a flexible adhesive-backed polymer film which may be applied to the interior or exterior surface of an existing glazing system.

FIELD TECHNICIAN is a person who performs acceptance tests in accordance with the specifications in Reference Nonresidential Appendix NA-7 and reports the results of the acceptance tests on the Certificate of Acceptance document, in accordance with the requirements of §10-103(a)4.

FOSSIL FUELS are fuels which are derived from natural gas, coal, oil and liquefied petroleum products. These are generally nonrenewable resources, although natural gas may also be produced by other means, such as biomass conversion.

FRAMED PARTITION OR ASSEMBLY is a partition or assembly constructed using separate structural members spaced not more than 32 inches on center.

FRAMING EFFECTS is the effect on the overall U-factor due to the type and amount of framing in walls, roofs/ceilings and floors. For compliance, fixed values for wood framing percentages are assumed when calculating U-factors.

FRAMING PERCENTAGE is the fraction of the surface of a partition that is framing as compared to that portion which is cavity.

FRONT is the primary entry side of the building (front facade) used as a reference in defining the orientation of the building or unit plan. The orientation of the front facade may not always be the same as that for the front door itself.

FUME HOOD SASH OBSTRUCTION SENSOR detects obstructions in the sash opening and prevents the automatic closing when obstructions are present.

GAP WIDTH is the distance between lites in multi-glazed systems. This is typically measured from inside surface to inside surface, though some manufacturers may report “overall” insulated glass (IG) width, which is measured from outside surface to outside surface.

GAS INFILLS are air, argon, krypton, CO_2, SF6, or a mixture of these gasses between the panes of glass in insulated glass units.

GEOTHERMAL HEAT PUMP See Ground Source Heat Pump.

GLAZING AREA See Fenestration Area in Section 100.1 of Title 24, Part 6.

GRID HARMONIZATION STRATEGIES are measures that harmonize customer owned distributed energy resource assets with the grid to maximize self-utilization of PV array output, and limit grid exports to periods beneficial to the grid and the ratepayer.

GRILLES See Dividers.

GROUND FLOOR AREA is the slab-on-grade area of a slab-on-grade building and the conditioned footprint area of a raised floor building (for compliance with the low-rise residential standards).

GROUND SOURCE HEAT PUMP is a heat pump that uses the earth as a source of energy for heating and a sink for energy when cooling. Some systems pump water from an aquifer in the ground and return the water to the ground after transferring heat from or to the water. A few systems use refrigerant directly in a loop of piping buried in the ground. Those heat pumps that use either a water loop or pump water from an aquifer have efficiency test methods that are accepted by the Energy Commission. These efficiency values are certified to the Energy Commission by the manufacturer and are expressed in terms of heating Coefficient of Performance (COP) and cooling Energy Efficiency Ratio (EER).

HERS Is the California Home Energy Rating System as described in Title 20, Chapter 4, Article 8, Section 1670 et seq.

HERS PROVIDER is an organization approved by the Commission to ~~that~~ administer~~s~~ a home energy rating system as described in Title 20, Chapter 4, Article 8, Section 1670.

HERS PROVIDER DATA REGISTRY is a residential data registry maintained by an approved HERS provider.

HERS RATER is a person who has been trained, tested, and certified by a HERS Provider to perform the field verification and diagnostic testing required for demonstrating compliance with the Part 6, as described in Title 20, Chapter 4, Article 8, Section 1670 et seq.

HOOD is a device designed to capture and contain cooking effluent including, grease, smoke, steam, heat, and vapor until it is exhausted through a duct or recirculating system. Hoods are categorized as Type 1 or Type 2:

TYPE I HOOD is a hood used for collecting and removing convective heat, grease particulate, condensable vapor, and smoke. It includes listed grease filters, baffles, or extractors for removing the grease and a fire-suppression system. Type I hoods are installed over cooking appliances, such as ranges, fryers, griddles, broilers, and ovens, that produce smoke or grease-laden vapors. For Type I hoods, the following types of hoods are commonly available:

WALL-MOUNTED CANOPY HOOD is mounted against a wall above a single appliance or a line of appliances, or it may be free-standing with a vertical back panel extending from the rear of the appliance(s) to the hood. It typically extends beyond the front and sides of the appliance(s) on all open sides. The wall acts as a back panel, forcing replacement air to be drawn across the front and/or side(s) of the cooking appliance, thus increasing the effectiveness of the hood to capture and contain effluent generated by the cooking operations.

SINGLE ISLAND CANOPY HOOD is placed over a single appliance or line of appliances. It is open on all sides and overhangs the front, rear, and sides of the appliance(s). A single island canopy is more susceptible to cross-drafts and requires a greater exhaust airflow than an equivalent sized wall-mounted canopy to capture and contain effluent generated by the cooking operations.

DOUBLE ISLAND CANOPY HOOD is placed over back-to-back appliances or lines of appliances. It is open on all sides and overhangs the front and the sides of the appliance(s). It may have a wall panel between the backs of the appliances.

BACKSHELF or PROXIMITY HOOD is a low-proximity hood, or a wall-mounted sidewall hood that:

(a) is positioned lower in height and depth than a canopy hood;

(b) is set back from the front of the appliance;

(c) is closed to the rear of the appliances by (a) a panel when the appliance is freestanding, or (b) a panel or wall when the appliance is wall mounted;~~,~~ and~~;~~

(d) is located above the cooking surface.

This style of hood can be constructed with partial end panels to increase its effectiveness in capturing the effluent generated by the cooking operations.

EYEBROW HOOD is mounted directly to the face or top of an appliance above the opening(s) or door(s) from which effluent is emitted, overhanging the front of the opening(s) to capture the effluent.

PASS-OVER HOOD is a back shelf hood constructed and installed low enough to allow food to be passed over the top.

TYPE II HOOD is a type of hood that collects and removes steam, heat, and products of combustion where grease or smoke is not present. It may or may not have grease filters or baffles and is not required to have a fire-suppression system.

HORIZONTAL GLAZING See Skylight in Section 100.1 of Title 24, Part 6.

HOTEL/MOTEL is a building or buildings that has six or more guest rooms or a lobby serving six or more guest rooms, where the guest rooms are intended or designed to be used, or which are used, rented, or hired out to be occupied, or which are occupied for sleeping purposes by guests, and all conditioned spaces within the same building envelope. Hotel/motel includes all conditioned spaces which are (1) on the same property as the hotel/motel, (2) served by the same central heating, ventilation, and air-conditioning system as the hotel/motel, and (3) integrally related to the functioning of the hotel/motel as such, including, but not limited to, exhibition facilities, meeting and conference facilities, food service facilities, lobbies, and laundries. Hotel/motel also includes the following:

A building of Occupancy Group R-1,

Vacation timeshare properties and hotel or motel buildings of Occupancy Group R-2, and

The following types of Occupancy Group R-3:

Congregate residences for transient use,

Boarding houses of more than 6 guests, and

Alcohol or drug abuse recovery homes of more than 6 guests.

HSPF See Heating Seasonal Performance Factor.

HYDRONIC COOLING SYSTEM is any cooling system which uses water or a water solution as a source of cooling or heat rejection, including chilled water systems (both air and water-cooled) as well as water-cooled or evaporatively cooled direct expansion systems, such as water source (water-to-air) heat pumps.

HYDRONIC SPACE HEATING SYSTEM is a system that uses water-heating equipment, such as a storage tank water heater or a boiler, to provide space heating. Hydronic space heating systems include both radiant floor systems and convective or fan coil systems. See Combined Hydronic Space/Water Heating System.

ANSI/IES LS-1-20 is an American National Standard as authored by the Illuminating Engineering Society and titled "Nomenclature and Definitions for Illuminating Engineering." (ANSI/IES LS-1-20).

IES LM-9 is the Illuminating Engineering Society document titled, “Electrical and Photometric Measurements of Fluorescent Lamps.” (ANSI/IES LM-9-20)

IES LM-20 is the Illuminating Engineering Society document titled "Photometric Testing of Reflector-Type Lamps – Incandescent Lamps." (ANSI/IES LM-20-20)

IES LM-45 is the Illuminating Engineering Society document titled, "Electrical and Photometric Measurements of General Service Incandescent Filament Lamps." (ANSI/IES LM-45-20)

IES LM-46 is the Illuminating Engineering Society document titled, "Photometric Testing of Indoor Luminaires Using High Intensity Discharge or Incandescent Filament Lamps." 2004. (ANSI/IES-LM-46-20)

IES LM-51 is the Illuminating Engineering Society document titled, "Electrical and Photometric Measurements of High Intensity Discharge Lamps." (ANSI/IES LM-51-20)

IES LM-66 is the Illuminating Engineering Society document titled, "Electrical and Photometric Measurements of Single-Ended Compact Fluorescent Lamps." (ANSI/IES LM66-20)

IES LM-79 is the Illuminating Engineering Society document titled, "Approved Method: Optical and Electrical Measurement~~s~~ of Solid-State Lighting Products." (ANSI/IES LM-79-19)

IES LM-80 is the Illuminating Engineering Society document titled, "Measuring Luminous Flux and Color Maintenance of LED Packages, Arrays, and Modules." (ANSI/IES LM 80-20).

IES TM-21 is the Illuminating Engineering Society document titled, "Projecting Long Term Lumen, Photon, and Radiant Flux Maintenance of LED Light Sources." (ANSI/IES TM-21-19).

IG UNIT, See "Insulating Glass Unit."

INDEPENDENT IDENTITY is having no financial interest in, and not advocating or recommending the use of any product or service as a means of gaining increased business with firms or persons specified in Section 1673(i) of the California Home Energy Rating System Program regulations (California Code of Regulations, Title 20, Division 2, Chapter 4, Article 8). (Financial Interest is an ownership interest, debt agreement, or employer/employee relationship. Financial interest does not include ownership of less than 5 percent of the outstanding equity securities of a publicly traded corporation).

> ***NOTE:*** The definitions of "independent entity" and "financial interest," together with Title 20, Section 1673(i), prohibit conflicts of interest between HERS Providers and HERS Raters, or between Providers/Raters and builders/subcontractors.

INDIRECTLY CONDITIONED SPACE is enclosed space, including, but not limited to, unconditioned volume in atria, that (1) is not directly conditioned space; and (2) either (a) has a thermal transmittance area product (UA) to directly conditioned space exceeding that to the outdoors or to unconditioned space and does not have fixed vents or openings to the outdoors or to unconditioned space, or (b) is a space through which air from directly conditioned spaces is transferred at a rate exceeding three air changes per hour.

INDUSTRIAL EQUIPMENT is manufactured equipment used in industrial processes.

INFILTRATION CONTROLS are measures taken to control the infiltration of air. (Mandatory Infiltration control measures include weather-stripping, caulking, and sealing in and around all exterior joints and openings).

INSTALLER means the builder's subcontractor or the person installing the equipment.

INSULATING GLASS UNIT is a self-contained unit, including the glazings (lites or panes of glass), spacer(s), films (if any), gas infills, and edge caulking, installed in fenestration products. It does not include the frame.

INSULATION is a material that limits heat transfer. Insulating material of the types and forms listed in Section 110.8(a) may be installed only if the manufacturer has certified that the insulation complies with the Standards for Insulating Material, Title 24, Part 12, Chapter 12-13 of the California Code of Regulations. (Movable insulation is designed to cover windows and other glazed openings part of the time to reduce heat loss and heat gain.)

INTERIOR PARTITION is an interior wall or floor/ceiling that separates one area of conditioned space from another within the building envelope.

IPLV See Integrated Part Load Value.

ISO/IEC 17011 is the International Organization for Standardization and the International Electrotechnical Commission document titled "Conformity assessment – General requirements for accreditation bodies accrediting conformity assessment bodies." (EN ISO/IEC 17011:2017).

ISO/IEC 17020 is the International Organization for Standardization and the International Electrotechnical Commission document titled "General criteria for the operation of various types of bodies performing inspection." (EN ISO/IEC 17020:2012).

ISO/IEC 17025 is the International Organization for Standardization and the International Electrotechnical Commission document titled "General requirements for the competence of testing and calibration laboratories." (ISO/IEC Standard 17025:2017).

ISOLATION DEVICE is a device that prevents the conditioning of a zone or group of zones in a building while other zones of the building are being conditioned.

KNEE WALL is a sidewall separating conditioned space from attic space under a pitched roof. Knee walls should be insulated as an exterior wall as specified by the chosen method of compliance.

LEFT SIDE is the left side of the building as one faces the front facade from the outside. This designation is used on the Certificate of Compliance and other compliance documentation.

Decorative Lamp is a lamp with a candle-like or globe shape envelope including shapes B, BA, C, CA, DC, G, and F as defined in ANSI C79.1-, and with at least 5 percent of its total flux radiated in the 110 deg – 180 deg zone of vertical angles, as measured from the nadir, when the lamp is oriented in a base up position.

Omnidirectional lamp is a general service replacement lamp with an ANSI standard base that emits the majority of light produced in an even distribution. Omnidirectional lamps shall have 80 percent of the luminous intensity measured values (candelas) vary by no more than 35 percent from the average of all measured values in the 0 deg to 130 deg zone. All measured values (candelas) in the 0 deg to 130 deg zone shall vary by no more than 60 percent from the average of all measured values in that zone. No less than 5 percent of total flux (zonal lumens) shall be emitted in the 130 deg to 180 deg zone. Omnidirectional lamps can be

standard; having an ANSI standard lamp shape of A, BT, P, PS, S or T, or omnidirectional lamps can have a non-standard shape, such as a self-ballasted compact fluorescent that utilize a bare spiral.

LIQUID LINE is the refrigerant line that leads from the condenser to the evaporator in a split system air conditioner or heat pump. The refrigerant in this line is in a liquid state and is at an elevated temperature. This line should not be insulated.

LISTED is in accordance with Article 100 of the California Electrical Code.

LOW-GWP REFRIGERANT is a compound used as a heat transfer fluid or gas that is: (A) any compound or blend of compounds, with a GWP Value less than 150; and (B) U.S. EPA Significant New Alternatives Policy (SNAP)-approved; and (C) not an ozone depleting substance as defined in Title 40 of the Code of Federal Regulations, Part 82, §82.3 (as amended March 10, 2009).

LOW-RISE ENCLOSED SPACE is an enclosed space located in a building with 3 or fewer stories.

LOW-RISE RESIDENTIAL BUILDING is a building, other than a hotel/motel that is Occupancy Group:

R-2, multifamily, with three stories or less; or

R-3, single family; or

U-building, located on a residential site.

LOW-SLOPED ROOF is a roof that has a ratio of rise to run of 2:12 or less.

LPG is liquefied petroleum gas. Propane is one type of LPG.

MAKEUP AIR is outdoor air deliberately brought into the building from the outside and supplied to the vicinity of an exhaust hood to replace air, vapor, and contaminants being exhausted. Makeup air is generally filtered and fan-forced, and it may be heated or cooled depending on the requirements of the application. Makeup air may be delivered through outlets integral to the exhaust hood or through outlets in the same room. (see Stds.)

MANDATORY MEASURES CHECKLIST is a form used by the building plan checker and field inspector to verify compliance of the building with the prescribed list of mandatory features, equipment efficiencies and product certification requirements. The documentation author indicates compliance by initialing, checking, or marking N/A (for features not applicable) in the boxes or spaces provided for the designer.

MANUAL is capable of being operated by personal intervention.

MANUFACTURED DEVICE is any heating, cooling, ventilation, lighting, water heating, refrigeration, cooking, plumbing fitting, insulation, door, fenestration product, or any other appliance, device, equipment, or system subject to §110.0 through §110.9 of Part 6.

MEDICAL AND CLINICAL CARE See Nonresidential Functional Area or Type of Use.

MIXED OCCUPANCY BUILDING is a building designed and constructed for more than one type of occupancy, such as a three story building with ground floor retail and second and third floor residential apartments.

MODEL is a single floor plan of a dwelling unit design. To be considered the same model; dwelling units shall be in the same subdivision or multifamily housing development and have the same energy designs and features, including the same floor area and volume. For multifamily buildings, variations in the exterior surface areas caused by the location of dwelling units within the building do not cause dwelling units to be considered different models.

> ***NOTE:*** For purposes of establishing HERS sampling groups, variations in the basic floor plan layout, energy design, compliance features, zone floor area, or zone volume, that do not change the HERS features to be tested, the heating or cooling capacity of the HVAC unit(s), or the number of HVAC units specified for each dwelling unit, shall not cause dwelling units to be considered different models.

MOVABLE SHADING DEVICE See Operable Shading Device in Section 100.1 of Title 24, Part 6.

MULLION is a vertical framing member separating adjoining window or door sections. See Dividers.

MULTIFAMILY BUILDING is any of the following:

A building of Occupancy Group R-2, other than a hotel/motel building or timeshare property;

A building of Occupancy Group R-3 that is a nontransient congregate residence, other than boarding houses of more than 6 guests and alcohol or drug abuse recovery homes of more than 6 guests; or

A building of Occupancy Group R-4.

MULTIFAMILY DWELLING UNIT is a dwelling unit of occupancy type R, as defined by the CBC, sharing a common wall and/or ceiling/floor with at least one other dwelling unit.

MULTIPLE ZONE is a supply fan (and optionally a return fan) with heating and/or cooling heat exchangers (e.g. DX coil, chilled water coil, hot water coil, furnace, electric heater) that serves more than one thermostatic zone. Zones are thermostatically controlled by features including but not limited to variable volume, reheat, recool and concurrent operation of another system.

MUNTINS See Dividers.

NEMA LE 7is the National Electrical Manufacturers Association document titled “Recessed Luminaires intended for Contact with Expanding Polyurethane Foam Insulation,” (NEMA LE 7-2015).

NEMA SSL 7A is the National Electrical Manufacturers Association document titled “Phase Cut Dimming for Solid State Lighting: Basic Compatibility,” 2015 (NEMA SSL 7A-2015).

NFRC is the National Fenestration Rating Council. This is a national organization of fenestration product manufacturers, glazing manufacturers, manufacturers of related materials, utilities, state energy offices, laboratories, home builders, specifiers (architects), and public interest groups.

> ***NOTE*:** This organization is designated by the Commission as the Supervisory Entity, which is responsible for rating the U-factors and solar heat gain coefficients of manufactured fenestration products (i.e., windows, skylights, glazed doors) that must be used in compliance calculations. See also Fenestration Area and Fenestration Product.

NONDEPLETABLE SOURCES is defined as energy that is not obtained from depletable sources. Also referred to as renewable energy, including solar and wind power. See Energy Obtained from Nondepletable Sources.

NONDUCTED SYSTEM Is an air conditioner or heat pump that is designed to be permanently installed equipment and directly heats or cools air within the conditioned space using one or more indoor coils that are mounted on room walls and/or ceilings. The unit may be of a modular design that allows for combining multiple outdoor coils and compressors to create one overall system.

NSHP GUIDEBOOK is the New Solar Homes Partnership Guidebook, currently adopted by the Energy Commission.

OUTDOOR SALES CANOPY is a canopy specifically to cover and protect an outdoor sales area.

OUTSIDE AIR See Outdoor Air.

PACKAGED AIR CONDITIONER OR HEAT PUMP is an air conditioner or heat pump that combines both the condenser and air handling capabilities in a single enclosure or package.

PARALLEL FAN-POWERED TERMINAL UNIT is a terminal unit that combines a VAV damper in parallel with a fan that only runs when the terminal unit is providing heating to the space.

PARTY PARTITION is a wall, floor, or ceiling that separates the conditioned spaces of two different tenants.

PERM is equal to 1 grain of water vapor transmitted per 1 square foot per hour per inch of mercury pressure difference.

PLENUM is an air compartment or chamber, including uninhabited crawl space, areas above a ceiling or below a floor, including air spaces below raised floors of computer/data processing centers, or attic spaces, to which one or more ducts are connected and which forms part of either the supply-air, return-air or exhaust air system, other than the occupied space being conditioned.

PROPOSED DESIGN BUILDING is a proposed building being modeled using rules described in the Alternative Calculation Method Manual. In order for a building to comply with the standards, the proposed building energy use must be less than or equal to the Standard Design Building energy use and meet the mandatory requirements in the Title 24 Building Energy Efficiency Standards.

PUBLIC ADVISER is the Public Adviser of the Commission.

REAR See Back.

RECORD DRAWINGS are drawings that document the as installed location and performance data on all lighting and space conditioning system components, devices, appliances and equipment, including but not limited to wiring sequences, control sequences, duct and pipe distribution system layout and sizes, space conditioning system terminal device layout and air flow rates, hydronic system and flow rates, and connections for the space conditioning system. Record drawings are sometimes called “as built” drawings.

RECOVERY EFFICIENCY is one measure of the efficiency of water heaters. It is required for water heating energy calculations for some types of water heaters. It is a measure of the percentage of

heat from combustion of gas or oil which is transferred to the water. For non-storage type water heaters, the recovery efficiency is really a thermal efficiency.

REFERENCE COMPUTER PROGRAM is the reference method against which other methods are compared. For the Nonresidential Standards, the reference computer program is DOE 2.1E. For the low-rise Residential Standards the reference computer program is CALRES.

REFERENCE JOINT APPENDICES Are the Reference Joint Appendices published by the Commission.

REFERENCE NONRESIDENTIAL APPENDICES Are the Nonresidential Appendices published by the Commission.

REFERENCE RESIDENTIAL APPENDICES Are the Residential Appendices published by the Commission.

REFRIGERANT CHARGE is to the amount of refrigerant that is installed or "charged" into an air conditioner or heat pump. The refrigerant is the working fluid. It is compressed and becomes a liquid as it enters the condenser. The hot liquid is cooled in the condenser and flows to the evaporator where it released through the expansion valve. When the pressure is released, the refrigerant expands into a gas and cools. Air is passed over the evaporator to provide the space cooling. When an air conditioner or heat pump has too much refrigerant (overcharged) the compressor may be damaged. When an air conditioner has too little refrigerant (undercharged), the efficiency of the unit is reduced. A thermostatic expansion valve (TXV) can mitigate the impact of improper refrigerant charge.

REGISTERED DOCUMENT means the document has been submitted to a residential or nonresidential data registry for retention, and the data registry has assigned a unique registration number to the document.

REGISTRATION PROVIDER is an organization that administers a data registry service that conforms to the requirements of Reference Joint Appendix JA-7.

RIGHT SIDE is the right side of the building as one faces the front facade from the outside (see Front). This designation is used to indicate the orientation of fenestration and other surfaces, especially in model homes that are constructed in multiple orientations.

R-VALUE is the measure of the thermal resistance of insulation or any material or building component expressed in (ft^2-hr °F)/Btu.

SASH ZONE PRESENCE SENSOR is an occupancy sensor that detects people in the area near the fume hood sash for automatic closure controls.

SC See Shading Coefficient in Section 100.1 of Title 24, Part 6.

SHOWER HEAD is a fixture for directing the spray of water in a shower. A shower head may incorporate one or more sprays, nozzles or openings. All components that are supplied standard together and function from one inlet (i.e., after the mixing valve) form a single shower head.

SINGLE FAMILY BUILDING is any of the following:

A residential building of Occupancy Group R-3 with two or less dwelling units;

A building of Occupancy Group R-3, other than a multifamily building or hotel/motel building;

A townhouse;

A building of Occupancy Group R-3.1; or

A building of Occupancy Group U when located on a residential site.

SINGLE ZONE is an HVAC system with a supply fan (and optionally a return fan) and heating and/or cooling heat exchangers (e.g. DX coil, chilled water coil, hot water coil, furnace, electric heater) that serves a single thermostatic zone. This system may or may not be constant volume.

SLAB-ON-GRADE is an exterior concrete floor in direct contact with the earth below the building.

SOLAR REFLECTANCE See Reflectance in Section 100.1 of Title 24, Part 6.

SPACER, ALUMINUM is a metal channel that is used either against the glass (sealed along the outside edge of the insulated glass unit), or separated from the glass by one or more beads of caulk, which is used to separate panes of glass in an insulated glass unit.

SPACER, INSULATING is a non-metallic, relatively non-conductive material, usually of rubber compounds, that is used to separate panes of glass in an insulated glass unit.

SPACER, OTHER is a wood, fiberglass, or composite material that is used as a spacer between panes of glass in insulated glass units.

SPACER, SQUIGGLE is a flexible material, usually butyl, formed around a thin corrugated aluminum strip that is used as a spacer in insulated glass units.

SPECIFIC HEAT is the quantity of heat that must be added to a unit mass of a material to increase its temperature by one degree. Typical units are Btu/°F-lb.

SPLIT SYSTEM AIR CONDITIONER OR HEAT PUMP is an air conditioner or heat pump that has physically separate condenser and air handling units that work together as a single cooling system.

STANDARDS See Building Energy Efficiency Standards.

STANDBY LOSS, BTU/HR is the heat lost per hour from the stored water above room temperature. It is one of the measures of efficiency of water heaters required for water heating energy calculations for some types of water heaters. This standby loss is expressed as Btu/hr.

STANDBY LOSS, PERCENT is the ratio of heat lost per hour to the heat content of the stored water above room temperature. It is one of the measures of efficiency of water heaters required for water heating energy calculations for some types of water heaters. Standby loss is expressed as a percentage.

STORAGE, COOL is a storage area within a refrigerated warehouse where space temperatures are maintained between 32° F and 55° F.

SUBORDINATE OCCUPANCY is any occupancy type, in mixed occupancy buildings, that is not the dominant occupancy. See Dominant Occupancy, Mixed Occupancy.

SUCTION LINE is the refrigerant line that leads from the evaporator to the condenser in a split system air conditioner or heat pump. This line is insulated since it carries refrigerant at a low temperature.

SUSPENDED FILMS are low-e coated plastic films stretched between the elements of the spacers between panes of glazing; acts as a reflector to slow the loss of heat from the interior to the exterior.

SYSTEM is a combination of equipment, controls, accessories, interconnecting means, or terminal elements by which energy is transformed to perform a specific function, such as space conditioning, service water heating, or lighting.

TDV ENERGY See Time Dependent Valuation (TDV) Energy.

THERMAL BREAK WINDOW FRAME is metal fenestration frames that are not solid metal from the inside to the outside, but are separated in the middle by a material, usually urethane, with a lower conductivity.

THERMAL CONDUCTIVITY is the quantity of heat that will flow through a unit area of the material per hour when the temperature difference through the material is one degree.

THERMAL EMITTANCE See Emittance, Thermal.

TITLE 24 is all of the building standards and associated administrative regulations published in Title 24 of the California Code of Regulations. The Building Energy Efficiency Standards are contained in Part 6. Part 1 contains the administrative regulations for the building standards.

U-FACTOR is the overall coefficient of thermal transmittance of a fenestration, wall, floor, or roof/ceiling component, in Btu/(hr × ft² × ºF), including air film resistance at both surfaces.

U-FACTOR, CENTER OF GLAZING (Uc) is the U-factor for the center of glazing area.

U-FACTOR, TOTAL FENESTRATION PRODUCT (Ut) is the U-factor for the total fenestration product.

UIMC See Unit Interior Mass Capacity.

UL 1574 is the Underwriters Laboratories document titled “Track Lighting Systems,” 2016.

UL 1598 is the Underwriters Laboratories document titled “Standard for Luminaires,” 2020.

UL 181 is the Underwriters Laboratories document titled “Standard for Factory-Made Air Ducts and Air Connectors,” 2017.

UL 181A is the Underwriters Laboratories document titled “Standard for Closure Systems for Use With Rigid Air Ducts and Air Connectors,” 2017.

UL 181B is the Underwriters Laboratories document titled “Standard for Closure Systems for Use With Flexible Air Ducts and Air Connectors,” 2017.

UL 723 is the Underwriters Laboratories document titled “Standard for Test for Surface Burning Characteristics of Building Materials,” 2018.

UL 2108 is the Underwriters Laboratories document titled “Low Voltage Lighting Systems,” 2019.

UL DATA ACCEPTANCE PROGRAM (DAP) is an Underwriters Laboratory program that utilizes work conducted by a client as well as third-party test facilities in accordance with national and international accreditation criteria to facilitate the conduct of investigations of products. Among the types UL uses are Witnessed Test Data Program (WTDP) where UL witnesses the tests being conducted, Client Test Data Program (CTDP) which is where the client conducts the test and submits the data for UL review, and Third Party Test Data Program (TPTDP) where testing is conducted by another testing organization for clients and submitted to UL for review.

U-VALUE See U-factor.

VAPOR RETARDER CLASS is a measure of the ability of a material or assembly to limit the amount of moisture that passes through the material or assembly. Vapor retarder class shall be defined using the desiccant method with Procedure A of ASTM E96 as follows:

Class I: 0.1 perm or less

Class II: 0.1 < perm < 1.0 perm

Class III: 1.0 < perm < 10 perm (see Stds.)

VENTILATION AIR is that portion of supply air which comes from outside plus any recirculated air that has been treated to maintain the desired quality of air within a designated space. See also Outside Air.

VINYL WINDOW FRAME is a fenestration frame constructed with a polyvinyl chloride (PVC) which has a lower conductivity than metal and a similar conductivity to wood.

VISUAL QUALITY STANDARD FOR APPLIED WINDOW FILM is an International Window Film Association document titled "Visual Quality Standard for Applied Window Film," 2015.

WEATHERSTRIPPING is a specially designed strip, seal or gasket attached to doors and windows to prevent infiltration and exfiltration through cracks around the openings. Weatherstripping is one of the mandatory requirements for all new residential construction. See Infiltration, Exfiltration.

WEIGHTED AVERAGING is an arithmetic technique for determining an average of differing values for the members of a set by weighting each value by the extent to which the value occurs. In some cases when two or more types of a building feature, material or construction assembly occur in a building, a weighted average of the different types may be sufficiently accurate to represent the energy impact of each type considered separately.

WEST-FACING See Orientation.

WINDOW TYPE is a window assembly having a specific solar heat gain coefficient, relative solar heat gain, and U-factor.

ZONAL CONTROL is the practice of dividing a residence into separately controlled HVAC zones. This may be done by installing multiple HVAC systems that condition a specific part of the building, or by installing one HVAC system with a specially designed distribution system that

permits zonal control. The Energy Commission has approved an alternative calculation method for analyzing the energy impact of zonally controlled space heating and cooling systems. To qualify for compliance credit for zonal control, specific eligibility criteria specified in the Residential ACM Manual must be met.

Joint Appendix JA2

Appendix JA2 – Reference Weather/Climate Data

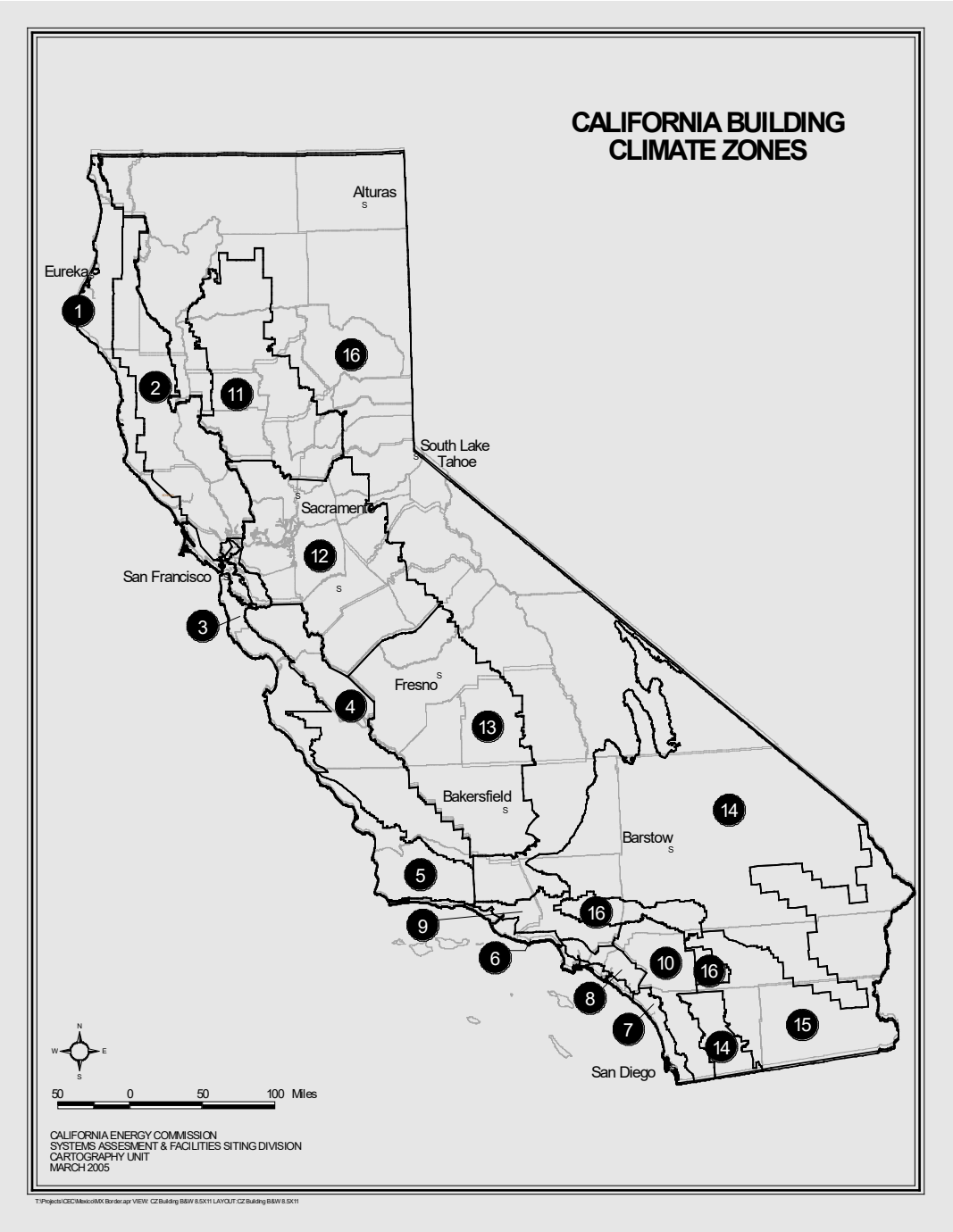

Figure2-1 – Climate Zone Map

JA2.1 Weather Data - General

All energy calculations used for compliance with the Standards must use the Commission's sixteen (16) official hourly weather files. These files are available in electronic form from the Commission in EPW (EnergyPlus), BINM, and FIN4 format.

Each weather file contains data on a variety of ambient conditions such as:

(a) Dry bulb temperature

(b) Humidity (Wet bulb or dewpoint temperature)

(c) Wind speed and direction

(d) Direct normal solar radiation

(e) Diffuse horizontal solar radiation

(f) Global horizontal solar radiation

(g) Pressure

(h) Rain fall

Table 2-1 –California Standard Climate Zone Summary

Note: The alternative weather files modified for local design conditions use the specific latitude, longitude and elevation of the selected city.

Climate Zone	City	Latitude	Longitude	Elevation (ft)
1	Arcata	41.0	124.1	203
2	Santa Rosa	38.5	122.8	125
3	Oakland	37.7	122.2	6
4	San Jose-Reid	37.3	121.8	135
5	Santa Maria	34.9	120.4	253
6	Torrance	33.8	118.3	88
7	San Diego-Lindbergh	32.7	117.2	13
8	Fullerton	33.9	118.0	95
9	Burbank-Glendale	34.2	118.3	741
10	Riverside	33.9	117.4	840
11	Red Bluff	40.1	122.2	348
12	Sacramento	38.5	121.5	16
13	Fresno	36.8	119.7	335
14	Palmdale	34.6	118.0	2523
15	Palm Springs-Intl	33.8	116.5	475
16	Blue Canyon	39.2	120.7	5279

JA2.1.1 Counties and Cities with Climate Zone Designations

The climate zone applicable to a building project is determined based on its physical location as it relates to the determinations of climate regions found in the Commission publication *California Climate Zone Descriptions*, which contains detailed survey definitions of the 16 climate zones. The Energy Commission publishes an online Climate Zone Search Tool to assist in providing this determination, which is made available online at:

https://www.energy.ca.gov/programs-and-topics/programs/building-energy-efficiency-standards/climate-zone-tool-maps-and.

Where a ZIP code contains more than one climate region, local jurisdictions may, at their discretion, designate a single climate zone within the ZIP code as applying to the entire ZIP code.

JA2.2 California Design Location Data

The data contained in the following table was obtained through a joint effort by the Southern California Chapter and the Golden Gate Chapter of ASHRAE. It is reprinted here with the written permission of Southern California Chapter ASHRAE, Inc. The values for 1.0 percent drybulb and 1.0 percent mean coincident wetbulb (MCWB) are interpolated.[1]

The data in Table 2-3 is developed from ~~A~~a full listing of design location data for California is contained in the ASHRAE publication *SPCDX, Climate Data for Region X, Arizona, California, Hawaii, and Nevada* (ISBN 200021, May 1982) and *Supplement to Climatic Data for Region X, Arizona, California, Hawaii, Nevada* (ISBN 20002956, November 1994). The publication may be ordered from:

Order Desk
Building News
10801 National Blvd.
Los Angeles, CA 90064
(888) 264-7483 or (310) 474-7771
http://www.bnibooks.com

1 The interpolation formula is 2.0%value + 0.6667 (0.5%Value – 2.0% value + 0.5).

Table 2-3 – Design Day Data for California Cities

City	Latitude	Elevation (ft)	Longitude	Cooling											Heating			
				0.10%		0.50%		1.00%		2.00%								
				DB	MCWB	DB	MCWB	DB	MCWB	DB	MCWB	Design Wetbulb 0.1%	Design Wetbulb 0.5%	Outdoor Daily Range	Winter Median of Extremes	Design Drybulb (0.2%)	Design Drybulb (0.6%)	HDD*
Adelanto	34.6	2865	117.4	105	67	101	65	100	64	97	62	70	68	39	14	24	27	1654
Adin RS	41.2	4195	121	96	61	92	60	91	60	88	59	65	63	43	-7	-2	4	-
Agoura Hills	34.2	700	118.8	103	70	96	68	94	68	90	66	73	71	29	27	31	34	-
Alameda NAS	37.8	15	122.3	88	65	82	64	80	64	76	62	66	64	21	35	38	40	2507
Alamo	37.9	410	122.9	102	69	97	68	96	68	92	66	72	70	30	23	28	31	-
Albany	37.9	40	122.3	88	65	83	64	81	64	77	62	66	64	16	30	35	38	-
Alderpoint	40.2	460	123.6	100	69	95	67	94	67	90	65	70	68	39	21	27	30	3424
Alhambra	34	483	118.1	100	71	96	70	94	70	90	68	73	71	25	30	35	37	-
Aliso Viejo	33.6	50	117.7	91	69	83	68	81	68	76	66	71	69	18	30	33	36	-
Almaden AFS	37.2	3470	121.9	95	62	90	60	89	60	85	59	64	62	20	20	25	29	4468
Alondra Park	33.9	50	118.3	91	69	86	68	85	68	81	66	71	69	17	35	40	42	-
Alpine	32.8	1735	116.8	99	69	95	68	94	68	91	67	72	70	35	27	32	35	-
Alta Sierra	35.7	6500	118.6	87	62	84	61	83	61	80	59	65	63	32	-4	1	8	2428
Altadena	34.2	1200	118.1	99	68	94	67	92	67	88	66	72	70	31	32	37	39	1920
Alturas RS	41.5	4400	120.6	99	62	96	61	95	61	91	59	65	63	43	-10	-4	0	6895
Alum Rock	37.4	70	121.8	95	68	90	66	88	66	84	64	70	68	22	28	33	36	-
American Canyon	37.6	85	122.3	93	67	90	66	88	66	84	64	70	68	23	28	33	36	-
Anaheim	33.8	158	117.9	99	69	92	68	90	68	85	67	73	71	26	32	37	39	-
Anderson	40.5	430	122.3	107	71	103	70	101	70	97	68	72	70	30	26	31	34	-
Angwin	38.6	1815	122.4	98	66	93	64	92	64	88	62	69	66	33	25	30	33	-
Antioch	38	60	121.8	102	70	97	68	95	68	91	66	70	69	34	22	28	31	2627

Apple Valley	34.5	2935	117.2	105	66	101	65	100	65	97	64	70	68	38	14	21	25	-
Aptos	37	500	121.9	94	67	88	66	87	65	83	63	69	67	30	27	32	35	-
Arcadia	34.2	475	118	100	69	96	68	95	68	91	67	73	71	30	31	36	38	-
Arcata	41	218	124.1	75	61	69	59	68	59	65	58	61	60	11	28	31	33	5029
Arden	38.5	80	121.4	104	70	100	69	98	69	94	67	73	71	35	28	33	35	-
Arroyo Grande	35.1	105	120.6	92	66	86	64	84	64	79	62	67	65	18	28	32	35	-
Artesia	33.8	50	118.1	99	71	91	70	89	70	85	68	73	71	23	33	37	40	-
Arvin	35.2	445	118.8	106	71	102	69	101	69	98	68	74	72	30	26	29	32	-
Ash Mtn	36.5	1708	118.8	105	69	101	68	100	68	97	66	72	70	30	25	31	33	2703
Ashland	37.7	45	122.1	92	66	86	65	85	64	81	62	68	66	24	26	31	34	977
Atascadero	35.5	837	120.7	94	66	89	67	88	67	84	65	70	68	42	25	29	32	-
Atherton	37.5	50	122.2	90	66	84	64	82	64	78	62	68	66	27	23	29	33	-
Atwater	37.3	150	120.6	102	72	99	70	98	69	94	67	74	72	38	24	30	34	-
Auberry	37.1	2140	119.5	102	69	98	67	97	66	95	64	71	69	36	21	27	30	3313
Auburn	38.9	1292	121.1	103	69	100	67	99	67	95	66	72	69	33	25	30	33	3089
Avalon	33.4	25	118.3	83	64	75	62	73	62	69	60	68	66	11	37	41	44	2204
Avenal	36	550	120.1	103	70	98	70	97	70	93	69	73	72	34	23	28	31	-
Avocado Heights	34.2	550	118	101	69	97	68	95	68	91	68	74	72	30	28	32	35	741
Azusa	34.1	605	118.2	101	70	97	69	95	69	91	68	74	72	36	31	36	38	-
Baker	35.3	940	116.1	115	73	112	72	111	72	108	70	77	75	29	23	28	31	-
Bakersfield AP	35.4	475	119.1	106	71	102	70	101	70	98	68	74	72	34	26	31	35	2185
Balch PH	36.9	1720	116.0	100	67	97	66	96	66	93	64	71	69	26	26	31	34	-
Baldwin Park	34	394	118	100	69	96	69	94	69	90	68	73	72	32	31	36	38	-
Banning	33.9	2349	116.9	104	69	100	68	99	68	96	67	73	71	34	20	26	30	-
Barrett Dam	32.7	1623	116.7	103	69	97	68	96	68	92	67	73	71	35	22	26	28	2656
Barstow	34.9	2162	117	107	69	104	69	103	69	100	67	74	72	35	16	23	27	2580
Baywood-Los Osos	35.3	100	-	88	65	82	64	80	64	76	62	67	65	14	31	36	38	-
Beale AFB	39.1	113	121.4	105	71	102	70	101	70	97	68	74	72	34	25	28	30	2835
Beaumont	33.9	2605	117	103	68	99	67	98	67	95	66	72	70	38	22	27	30	2628
Bell	33.9	143	118.2	97	70	91	69	89	69	85	67	72	70	22	33	38	41	-

Bell Gardens	33.9	160	118.2	97	70	91	69	87	67	85	67	72	70	22	32	37	40	-
Bellflower	33.8	73	118.1	98	70	91	69	89	69	85	67	72	70	21	32	37	40	-
Belmont	37.5	33	122.3	90	66	84	64	82	64	78	62	68	66	24	29	34	36	-
Ben Lomond	37.1	450	122.1	92	67	85	66	83	65	79	63	69	67	30	25	30	33	-
Benicia	38.1	55	122.1	99	69	93	67	91	67	87	65	70	68	30	28	33	36	
Berkeley	37.9	345	122.3	90	64	83	63	81	63	76	61	66	64	16	33	37	40	2950
Berryessa Lake	38.6	480	122.1	102	70	98	69	96	69	92	67	72	70	35	26	31	34	-
Beverly Hills	34.1	268	118.2	94	69	88	68	87	68	83	66	71	69	20	39	43	46	-
Big Bar RS	40.8	1260	121.8	102	68	98	67	97	67	93	65	70	68	46	19	25	28	-
Big Bear Lake	34.2	6745	116.9	87	59	83	58	82	58	79	56	64	62	32	-3	3	7	6850
Bishop AP	37.4	4108	118.4	103	61	100	60	99	60	97	58	65	63	40	5	12	16	4313
Blackhawk	37.7	10	121.9	88	65	82	64	80	64	76	62	66	64	21	35	38	40	977
Blackwells Corner	35.6	644	119.9	99	68	94	66	93	66	89	65	71	69	31	23	28	32	-
Bloomington	34	980	117.4	106	71	102	70	101	70	98	69	75	73	34	30	35	38	-
Blue Canyon AP	39.3	5280	120.7	88	60	85	59	84	59	81	57	64	62	20	13	20	24	5704
Blythe AP	33.6	395	114.7	115	74	112	73	111	73	108	71	80	78	27	28	33	36	1219
Blythe CO	33.6	268	114.6	115	74	112	73	111	73	108	71	80	78	27	24	29	32	1312
Boca	39.4	5575	120.1	92	58	89	57	88	57	84	55	62	60	46	-18	-13	-10	8340
Bodie	38.2	8370	119	83	50	80	49	79	49	76	48	55	53	42	-21	-16	-13	-
Bonadella Ranchos – Madera Rancho	36.8	270	119.9	105	72	101	70	100	70	96	68	74	72	40		29	32	1273
Bonita	32.7	105	117	91	69	82	67	81	66	78	64	70	68	20	28	32	44	1864
Boron AFS	35.1	3015	117.6	106	70	103	69	102	69	98	68	73	71	35	18	23	26	3000
Borrego Desert PK	33.2	805	116.4	112	76	107	74	105	74	101	72	79	77	36	25	30	33	-
Bostonia	32.8	600	116.9	96	70	91	69	88	69	81	67	72	70	30	29	34	36	-
Boulder Creek	37.2	493	122.1	92	67	85	65	83	65	79	63	69	67	30	25	30	33	1120
Bowman Dam	39.4	5347	120.7	89	59	86	57	85	57	82	55	63	60	26	9	17	22	5964
Boyes Hot Sprgs	38.2	300	122.5	100	70	95	69	93	69	89	67	72	70	40	22	28	31	1289
Brannan Island	38.1	30	121.7	100	69	95	68	93	68	89	67	72	70	10	24	28	31	-
Brawley 2 SW	33	-100	115.6	113	74	110	73	109	73	105	73	81	79	32	25	30	33	1204

Brea Dam	33.9	275	117.9	100	69	94	68	92	68	86	66	73	71	29	30	34	37	-
Brentwood	37.9	71	121.7	102	70	97	68	95	67	89	65	71	68	34	27	32	35	-
Bridgeport	38.2	6470	119.2	89	56	86	54	85	54	82	53	60	57	41	-20	-15	-12	-
Broderick-Bryte	38.6	20	121.5	104	71	100	69	98	69	94	67	72	71	36	25	31	35	-
Brooks Ranch	38.8	294	122.2	104	71	99	70	97	70	93	68	73	71	35	19	25	28	2968
Buena Park	33.9	75	118	98	69	92	68	90	68	85	67	72	70	25	31	35	38	-
Burbank AP	34.2	699	118.4	101	70	96	68	94	68	90	67	72	70	28	29	34	36	1701
Burbank Vly Pump	34.2	655	118.4	101	69	96	68	94	68	90	66	72	70	28	29	34	36	1678
Burlingame	37.6	10	122.4	88	67	82	64	80	64	76	63	68	65	20	30	35	37	-
Burney	40.9	3127	121.7	95	64	92	63	91	63	88	61	67	65	42	0	5	12	6404
Butler Valley (Korbel)	40.7	420	123.9	91	66	86	64	85	64	81	62	67	65	22	20	26	29	-
Buttonwillow	35.4	269	119.5	103	71	99	70	98	70	95	68	74	72	36	20	26	29	2621
Cabrillo NM	32.7	410	117.2	89	69	84	68	83	68	80	67	71	69	12	39	43	45	-
Cachuma Lake	34.6	781	120	97	69	92	67	91	67	87	65	70	68	19	26	31	34	-
Calabasas	34.2	1100	118.6	102	71	98	70	97	70	93	69	73	71	26	26	30	33	2348
Calaveras Big Trees	38.3	4696	120.3	92	61	88	60	87	60	84	58	64	62	33	11	18	23	5848
Calexico	32.7	12	115.5	114	74	110	73	109	73	106	71	81	79	28	26	31	34	-
California City	35.1	2400	118	107	69	104	68	103	68	99	66	72	70	33	10	17	22	2572
Callahan	41.3	3185	122.8	97	63	93	62	92	62	88	60	66	64	35	7	15	20	-
Calwa	36.8	330	119.8	105	73	101	71	100	70	97	68	75	73	34	23	27	29	-
Camarillo	34.2	147	119.2	91	69	84	68	82	68	78	67	71	69	22	28	32	35	
Cambria AFS	35.5	690	121.1	78	62	72	61	70	61	66	59	64	62	16	30	35	38	3646
Cameron Park	38.6	1800	121	101	67	98	66	97	66	93	65	70	68	42	20	26	29	2235
Camp Pardee	38.2	658	120.9	106	71	103	70	102	70	98	69	74	72	36	27	32	35	2812
Camp Pendleton	33.4	50	117.4	88	69	85	68	84	68	80	67	71	69	12	34	38	40	-
Camp Roberts	35.8	765	120.8	106	72	101	71	99	71	95	69	74	72	45	16	24	27	2890
Campbell	37.3	195	121.8	93	69	88	66	87	66	83	65	71	68	30	28	33	36	-
Campo	32.6	2630	116.5	101	67	95	66	94	66	90	66	71	69	41	16	23	27	3303
Canoga Park	34.2	790	118.6	104	71	99	70	97	70	93	69	74	72	38	25	30	33	1884
Cantil	35.3	2010	118	111	71	107	71	106	71	103	70	74	73	32	12	19	24	-

Canyon Dam	40.1	4555	121.1	93	60	90	59	89	59	85	57	64	62	39	1	6	13	6834
Canyon Lake	33.8	1500	117.3	105	70	101	69	100	69	97	68	74	72	39	22	27	30	-
Capitola	37	64	122	94	67	88	66	86	65	81	63	69	67	24	27	32	35	-
Cardiff-by-the-Sea	33	80	117.3	87	68	83	67	81	67	77	65	70	68	12	35	39	41	-
Carlsbad	33.2	44	117.4	87	68	83	67	81	67	77	65	70	68	10	34	38	40	-
Carmel Valley	36.5	425	121.7	94	68	88	66	86	66	80	65	69	67	20	25	30	33	-
Carmel-by-the-Sea	36.5	20	121.9	87	65	78	62	76	62	71	61	66	63	20	30	35	38	968
Carmichael	38.6	100	121.5	104	70	100	69	98	69	94	68	73	71	35	25	35	37	1290
Carpinteria	34.4	385	119.5	90	69	83	67	81	67	77	65	70	68	15	30	34	37	-
Carson	33.8	60	118.3	96	69	88	68	86	68	82	66	71	69	19	33	38	40	-
Casa de Oro-Mount Helix	32.7	530	117.0	96	71	88	69	87	69	84	67	72	70	19	34	38	41	404
Castle AFB	37.4	188	120.6	105	71	101	70	100	70	96	69	73	71	33	24	28	31	2590
Castro Valley	37.6	177	122.2	93	67	87	67	85	67	80	65	69	68	25	24	29	32	-
Castroville	36.8	20	121.8	86	66	77	63	75	63	70	61	67	64	18	32	37	40	1151
Cathedral City	33.8	400	116.5	117	74	113	73	112	73	109	72	79	78	33	26	31	34	374
Catheys Valley	37.4	1000	120.1	102	69	99	68	98	68	94	67	72	70	38	21	27	30	-
Cecilville	41.1	3000	123.1	95	63	89	62	88	61	84	59	65	63	44	13	20	24	-
Cedarville	41.5	4670	120.2	97	61	94	60	93	60	89	58	65	63	35	1	6	13	6304
Centerville PH	39.8	522	121.7	105	70	100	68	99	68	96	67	72	70	40	25	30	33	2895
Ceres	37.6	90	121	101	72	96	70	94	69	90	67	74	72	36	24	30	34	-
Cerritos	33.9	34	118.1	99	71	92	69	90	69	85	68	73	71	23	33	38	40	-
Charter Oak	34.1	600	117.9	101	70	97	69	95	69	91	68	74	72	34	29	34	36	-
Chatsworth	34.2	964	118.6	98	69	93	68	91	68	87	66	72	70	38	26	31	34	664
Cherry Valley Dam	38	4765	119.9	96	62	92	61	91	61	88	59	65	63	32	9	16	21	-
Cherryland	37.5	100	122.1	93	67	86	66	84	66	79	64	69	67	24	26	31	37	-
Chester	40.3	4525	121.2	94	62	91	61	90	61	86	59	65	63	33	-3	2	8	-
Chico Exp Sta	39.7	205	121.8	105	70	102	69	100	69	96	68	72	71	37	22	27	30	2878
China Lake	35.7	2220	117.7	112	70	108	68	107	68	104	68	74	72	33	15	22	25	2560
Chino	34	714	117.7	104	70	100	69	98	69	94	68	74	72	35	27	32	35	-

Chino Hills	34.1	800	117.7	104	70	100	69	98	69	94	68	74	72	35	27	32	35	800
Chowchilla	37	200	120.3	104	72	101	70	100	70	96	68	74	72	38	22	28	31	1250
Chula Vista	32.6	9	117.1	90	70	84	68	83	68	79	66	71	69	9	33	38	40	2072
Citrus Heights	38.7	138	121.5	104	71	100	70	98	70	94	68	74	72	36	24	26	29	-
Claremont	34.1	1201	117.8	101	69	97	68	95	68	91	66	73	71	34	29	34	36	2049
Clarksburg	38.4	14	121.5	102	70	97	69	95	69	91	67	72	70	35	24	29	32	2971
Clayton	38	60	121.9	102	70	97	68	95	67	89	65	71	68	34	27	32	35	-
Clearlake Highlands	39	1360	122.7	101	69	97	68	95	67	89	65	71	69	36	15	22	26	-
Cloverdale	38.8	320	123	102	70	97	69	95	68	89	66	72	70	37	26	31	34	2763
Clovis	36.8	404	119.7	105	72	102	70	101	70	98	68	74	72	36	22	28	32	-
Coachella	33.7	-76	116.2	114	74	110	73	109	73	106	73	80	79	28	25	30	34	-
Coalinga	36.2	671	120.4	103	70	98	70	97	70	93	69	73	72	34	23	28	31	2592
Colfax	39.1	2418	121	100	66	97	65	96	65	92	63	69	67	29	22	28	31	3424
Colton	34.1	978	117.3	105	70	102	68	101	68	97	67	74	72	35	28	33	36	-
Colusa	39.2	60	122	103	72	100	70	98	70	94	68	74	71	36	23	29	31	2793
Commerce	33.9	175	118.2	98	69	92	68	90	68	86	67	72	70	23	33	37	39	-
Compton	33.9	71	118.2	97	69	90	68	88	68	83	67	72	70	21	33	37	39	1606
Concord	38	195	112	102	70	97	68	95	67	89	65	71	68	34	27	32	35	3035
Corcoran	36.1	200	119.7	106	72	102	71	101	71	98	70	74	73	36	22	28	31	2666
Corning	39.9	487	122.2	106	71	103	70	102	69	98	67	73	71	33	23	28	31	1330
Corona	33.9	710	117.6	104	70	100	69	98	69	92	67	74	72	35	26	31	34	1794
Coronado	32.7	20	117.2	89	69	82	67	80	67	76	65	70	68	10	36	39	41	1500
Corte Madera	37.9	55	122.5	97	68	91	66	89	66	84	64	69	68	34	28	33	35	-
Costa Mesa	33.7	100	117.9	88	68	81	66	79	66	73	65	70	68	16	31	36	38	1482
Cotati	38.3	100	122.7	99	69	94	68	93	68	89	66	71	69	32	24	28	30	1205
Country Club	37.8	600	121.3	102	69	97	68	96	68	92	66	72	70	30	68	28	31	977
Covelo	39.8	1385	123.3	99	67	93	65	91	65	87	63	69	67	43	15	22	26	4179
Covina	34.1	575	117.9	101	70	97	69	95	69	91	68	74	72	34	29	34	36	-
Crescent City	41.8	40	124.2	75	61	69	59	68	59	65	58	61	60	18	28	33	36	4445
Crestline	34.2	4900	117.3	90	62	86	61	85	61	81	59	66	64	26	13	20	24	3200

Crockett	38	9	122.2	96	68	90	66	89	66	85	64	70	67	23	28	33	36	-
Crows Landing	37.4	140	121.1	101	70	96	68	94	68	89	66	72	70	33	23	28	31	2767
Cucamonga	34.1	1450	117.6	103	69	99	68	97	67	93	65	73	71	31	29	34	36	-
Cudahy	33.9	130	118.2	98	70	91	69	89	69	85	67	72	70	21	33	37	39	-
Culver City	34	106	118.4	96	70	88	69	87	69	83	67	72	70	18	35	40	42	1515
Cupertino	37.3	70	122	96	68	88	67	86	66	80	64	70	68	30	28	33	36	-
Cuyama	34.9	2255	116.6	99	68	96	67	94	67	89	66	72	70	42	13	20	24	-
Cuyamaca	33	4650	116.6	92	64	85	62	84	61	81	59	67	65	29	11	18	23	4848
Cypress	33.8	75	118	98	70	92	69	90	69	85	67	72	70	24	31	35	38	
Daggett AP	34.9	1915	116.8	109	68	106	68	105	68	102	66	73	72	33	21	26	29	2203
Daly City	37.6	410	122.5	84	65	78	62	77	62	73	61	66	63	16	34	37	39	-
Dana Point	33.5	100	117.7	91	69	84	68	82	68	78	66	71	69	13	30	33	36	600
Danville	37.8	368	122	102	69	97	68	96	68	92	66	72	70	30	23	28	31	977
Davis	38.5	60	121.8	103	72	99	70	97	70	93	68	74	71	41	24	30	34	2844
De Sabla	39.9	2713	121.6	97	66	94	64	92	64	88	62	68	66	35	18	24	27	4237
Death Valley	36.5	-194	116.9	121	77	118	76	117	76	114	74	81	79	28	27	33	37	1147
Deep Springs Clg	37.5	5225	118	98	60	95	59	94	59	92	58	64	62	35	-3	2	8	
Deer Creek PH	39.3	4455	120.9	93	61	91	60	90	60	87	58	65	63	39	10	17	22	5863
Del Aire	34	100	118.4	91	69	84	67	83	67	79	66	71	69	15	37	40	42	383
Delano	35.8	323	119.3	106	71	102	70	101	70	98	69	74	72	36	22	25	28	-
Denair	37.6	137	120.8	100	70	95	69	93	69	89	67	72	70	38	22	28	31	2974
Desert Hot Springs	34	1060	116.5	115	73	111	72	110	72	107	71	78	77	35	24	29	32	400
Diamond Bar	34	880	117.8	101	69	97	68	96	68	92	66	73	71	33	28	33	35	-
Dinuba	36.5	340	119.4	104	73	101	70	100	70	96	69	75	73	36	24	30	34	-
Discovery Bay	38.1	10	121.6	102	70	97	68	95	67	89	65	71	68	34	27	32	35	-
Dixon	38.4	100	121.9	104	72	99	70	97	70	93	68	74	71	36	24	30	33	2826
Dobbins	39.4	1640	121.2	104	70	101	68	100	68	96	67	72	70	31	24	29	32	-
Donner Mem Stt Pk	39.3	5937	120.3	85	56	82	56	81	56	77	54	60	58	40	-3	3	6	-
Donner Summit	39.4	7239	120.3	80	53	77	53	76	52	72	50	57	55	40	-8	-1	3	8290
Downey	33.9	110	118	98	71	90	70	88	70	84	68	73	71	21	32	37	39	-

Downieville RS	39.6	2895	120.8	98	64	95	63	94	63	90	61	68	66	42	13	20	24	-
Doyle	40	4390	120.1	96	63	93	62	92	61	88	59	66	64	42	0	5	12	-
Dry Canyon Res	34.5	1455	118.5	105	71	100	69	99	69	96	68	74	72	32	24	29	32	-
Duarte	34.1	500	118	100	69	96	68	94	68	90	67	73	71	33	31	36	38	-
Dublin	37.7	200	121.5	99	69	93	67	91	67	86	65	70	68	35	24	29	32	-
Dudleys	37.7	3000	120.1	97	65	94	64	93	64	90	62	68	66	44	10	17	22	4959
Duttons Landing	38.2	20	122.3	96	68	91	66	89	66	84	64	70	68	31	26	31	34	-
Eagle Mtn	33.8	973	115.5	113	72	110	71	109	71	105	69	77	75	24	32	37	39	1138
Earlimart	35.8	283	119.3	106	71	102	70	101	70	98	69	74	72	36	23	26	29	1100
East Compton	34	71	118.2	97	69	90	68	88	68	83	67	72	70	21	33	37	39	436
East Hemet	33.7	1655	116.9	109	70	104	69	103	69	101	67	74	72	40	20	25	28	-
East La Mirada	33.9	115	118.0	99	70	91	69	89	69	85	68	73	71	26	31	36	38	-
East Los Angeles	34	250	118.3	99	69	92	68	90	68	86	67	72	70	21	38	41	43	-
East Palo Alto	37.5	25	122.1	93	66	85	64	83	64	77	62	68	66	25	26	31	34	1103
East Park Res	39.4	1205	122.5	101	69	97	68	96	68	92	66	71	69	38	19	25	28	3455
East Pasadena	34.2	864	118.1	99	69	94	68	92	68	88	67	73	71	30	32	37	40	452
East Porterville	36.1	393	119.0	106	71	102	70	101	70	97	69	74	72	36	25	30	33	1129
East San Gabriel	34.1	450	118.1	99	70	94	69	92	69	88	68	73	71	30	30	35	37	431
Edwards AFB	34.9	2316	117.9	107	69	104	68	103	68	99	66	72	70	35	10	17	22	3123
El Cajon	32.7	525	117	96	70	91	69	90	69	87	67	72	70	30	29	34	36	-
El Capitan Dam	32.9	600	116.8	105	71	98	70	97	70	93	68	74	72	35	29	34	36	1533
El Centro	32.8	-30	115.6	115	74	111	73	110	73	107	73	81	79	34	26	35	38	1212
El Cerrito	37.8	70	122.3	91	66	84	64	81	64	75	62	68	65	17	30	35	38	-
El Dorado Hills	38.6	673	121.1	103	70	100	69	98	69	94	67	72	71	36	24	30	34	-
El Mirage	34.6	2910	117.6	105	69	101	68	100	68	97	66	72	70	31	9	16	21	-
El Monte	34.1	271	118	101	71	97	70	95	70	91	68	73	71	30	31	36	39	-
El Paso de Robles	35.6	721	120.7	102	65	95	65	94	65	90	65	69	67	44	16	20	23	1768
El Rio	34.3	50	119.2	95	69	88	68	86	68	82	66	71	69	20	30	34	37	-
El Segundo	33.9	105	118.4	91	69	84	68	83	68	79	66	71	69	14	37	40	42	-
El Sobrante	37.9	55	122.3	91	66	87	65	86	65	82	64	69	67	25	30	35	38	823

El Toro MCAS	33.7	380	117.7	96	69	89	69	87	69	82	68	73	71	26	34	38	41	1591
El Toro Station	33.7	380	117.7	96	69	89	69	87	69	82	68	73	71	26	34	38	41	560
Electra PH	38.3	715	120.7	106	70	102	69	101	69	98	68	73	71	41	23	28	31	2858
Elk Grove	38.4	50	121.4	104	71	100	69	98	69	94	68	73	71	35	29	34	36	1150
Elk Valley	42	1705	123.7	96	65	90	63	88	63	84	61	67	65	39	16	23	27	5404
Elsinore	33.7	1285	117.3	105	71	101	70	100	70	98	69	74	72	39	22	26	29	2128
Encinitas	33	50	117.3	87	68	83	67	81	67	77	65	70	68	10	35	39	41	-
Encino	34.2	750	118.5	103	71	98	69	96	69	92	67	74	71	27	28	33	36	664
Enterprise	40.6	470	122.3	107	69	103	68	101	68	97	67	72	70	29	26	31	34	-
Escondido	33.1	660	117.1	97	69	90	68	88	68	84	67	72	70	29	26	31	34	2005
Eureka	40.8	43	124.2	75	61	69	59	68	59	65	58	61	60	11	30	35	38	4679
Exeter	36.3	350	119.1	104	72	101	71	100	71	97	69	74	72	39	24	29	32	1236
Fair Oaks	38.7	50	121.3	104	70	100	69	98	69	94	69	72	71	36	23	29	33	-
Fairfax	38	110	122.6	96	68	90	66	88	65	83	63	71	68	34	26	31	34	-
Fairfield FS	38.3	38	122	103	69	98	68	96	68	91	66	73	71	34	24	30	33	2686
Fairmont	34.7	3060	118.4	100	67	96	66	95	66	92	65	71	69	22	22	28	31	3330
Fairview	35.9	3519	118.5	97	67	94	66	93	66	90	64	70	68	43	11	18	23	-
Fallbrook	33.6	660	117.3	94	68	89	67	88	67	85	66	71	69	29	26	31	34	2077
Farmersville	36.3	350	119.2	104	72	101	72	100	71	97	69	74	72	39	24	29	32	1236
Felton	37	100	122.1	94	68	88	66	86	66	81	64	69	67	28	27	32	35	1097
Ferndale	40.5	1445	124.3	76	57	66	56	65	56	62	54	59	57	12	28	33	35	-
Fillmore	34.4	435	118.9	100	70	94	69	92	69	87	67	73	71	30	28	32	35	-
Five Points	36.4	285	120.2	103	71	99	70	97	70	93	68	73	71	36	21	27	30	-
Fleming Fish & Game	40.4	4000	120.3	96	62	93	61	92	61	88	59	66	64	40	-3	2	8	-
Florence-Graham	34	175	118.3	98	69	90	68	88	68	84	67	72	70	19	35	40	43	-
Florin	38.5	100	121.4	104	71	100	69	98	69	94	68	73	71	35	29	34	36	-
Folsom Dam	38.7	350	121.2	104	70	101	69	99	69	95	67	72	71	36	25	31	35	-
Fontana	34.1	1090	117.4	105	70	101	69	100	69	97	67	74	72	33	30	35	38	1530
Foothill Farms	38.6	90	121.3	104	71	100	70	98	70	94	68	73	71	36	24	30	34	-
Forest Glen	40.4	2340	123.3	96	65	92	64	91	64	88	62	67	65	42	12	19	24	-

Fort Baker	37.8	15	122.5	87	66	81	65	79	65	73	65	67	65	12	33	38	40	3080
Fort Bidwell	41.9	4498	120.1	93	60	90	59	89	59	85	57	64	62	38	-2	3	10	6381
Fort Bragg	39.5	80	123.8	75	60	67	59	66	59	62	58	62	61	15	29	34	37	4424
Fort Jones RS	41.6	2725	122.9	98	64	93	63	92	63	88	61	67	65	44	5	13	18	5590
Fort MacArthur	33.7	200	118.3	92	69	84	68	82	68	78	66	71	69	13	35	40	42	1819
Fort Ord	36.7	134	121.8	86	65	77	63	75	62	70	60	67	64	18	24	29	32	3818
Fort Ross	38.5	116	123.3	79	63	74	62	71	61	65	59	64	62	19	30	35	37	4127
Fortuna	40.6	100	124.2	75	61	69	59	68	59	65	58	61	60	11	30	35	38	2000
Foster City	37.5	20	122.7	92	67	84	65	82	65	76	63	68	66	22	29	34	36	-
Fountain Valley	33.7	60	118	97	70	90	68	88	68	84	67	72	70	18	33	38	40	-
Freedom	37	1495	121.8	89	67	85	64	83	64	79	62	68	65	22	27	32	34	-
Fremont	37.5	56	122	94	67	88	65	86	65	81	63	69	67	24	25	30	33	-
Fresno AP	36.8	328	119.7	104	73	101	71	100	70	97	68	75	73	34	24	28	30	2650
Friant Gov Camp	37	410	119.7	106	72	103	70	102	70	100	68	74	72	40	23	28	31	2768
Fullerton	33.9	340	117.9	100	70	94	69	92	69	87	68	73	71	26	30	35	37	-
Galt	38.2	40	121.3	101	70	97	68	95	68	91	67	72	70	38	23	28	31	1240
Garden Acres	38	20	121.3	103	71	98	69	97	69	93	67	73	71	35	24	28	30	1334
Garden Grove	33.6	85	117.9	98	70	91	68	89	68	84	67	72	70	23	31	36	38	-
Gardena	33.9	40	118.3	92	69	85	68	84	68	80	66	71	69	18	32	37	39	-
George AFB	34.6	2875	117.4	105	67	102	65	101	64	98	62	70	68	31	19	23	26	2887
Georgetown RS	38.9	3001	120.8	98	64	95	63	94	63	90	61	68	66	31	18	24	27	-
Giant Forest	36.6	6412	118.8	84	56	81	55	80	55	77	53	60	58	26	5	13	18	-
Gillespie Field	32.8	385	117.0	98	71	91	70	89	70	85	68	73	71	30	24	29	32	-
Gilroy	37	194	121.6	101	70	93	68	91	67	86	65	72	69	25	23	28	31	-
Glen Avon	34	827	117.5	105	70	101	69	99	69	95	67	74	72	35	28	33	35	-
Glendale	34.2	563	118.3	101	70	96	68	94	68	90	67	73	71	28	30	35	37	-
Glendora	34.1	822	117.9	102	69	98	68	96	68	92	67	73	71	35	30	35	37	-
Glennville	35.7	3140	118.7	97	67	94	66	93	66	90	64	70	68	43	11	18	23	4423
Gold Rock Rch	32.9	485	114.8	113	73	110	72	109	72	106	70	79	77	28	31	36	38	-
Golden Hills	35.1	4000	118.5	97	66	93	65	92	65	89	64	69	67	33	13	20	24	-

Granada Hills	34.4	1032	118.5	100	70	95	68	93	68	89	66	73	70	37	28	31	34	664
Grand Terrace	34.1	1000	117.3	105	70	102	68	101	68	97	67	74	72	35	28	33	36	611
Grant Grove	36.7	6600	119	82	56	78	55	77	54	74	52	59	57	26	6	14	19	7044
Grass Valley	39.2	2400	121.1	99	67	96	65	95	65	91	63	69	67	29	19	25	28	-
Graton	38.4	200	122.9	95	68	91	67	88	66	82	64	70	68	34	22	28	31	3409
Greenacres	35.3	400	119.1	106	71	102	70	101	70	98	68	74	72	34	26	31	35	934
Greenfield	36.2	287	121.2	92	67	88	65	87	65	84	64	70	68	32	22	27	30	1020
Grossmont	32.7	530	117	96	69	89	68	88	68	84	66	71	69	23	31	36	38	-
Grover City	35.1	100	120.6	93	69	86	64	84	64	80	62	67	65	18	30	34	37	-
Guadalupe	35	85	120.6	92	66	86	64	84	64	79	62	67	65	18	28	32	35	1035
Hacienda Hts	34	300	118	100	69	96	68	94	68	90	67	73	71	28	31	36	38	-
Haiwee	36.1	3825	118	102	65	99	64	98	64	95	62	68	66	27	15	22	26	3700
Half Moon Bay	37.5	60	122.4	83	64	76	62	74	61	69	59	65	63	15	32	37	39	3843
Hamilton AFB	38.1	3	122.5	95	69	88	67	86	67	81	65	73	70	28	27	30	32	3311
Hanford	36.3	242	119.7	102	71	99	70	98	70	94	68	73	71	37	22	28	31	2736
Happy Camp RS	41.8	1150	123.4	103	67	97	66	96	66	92	65	69	67	41	18	24	27	4263
Hat Creek PH 1	40.9	3015	121.6	99	65	96	64	95	64	91	62	68	66	48	2	7	17	5689
Hawaiian Gardens	33.8	75	118.1	97	70	91	69	89	69	84	67	72	70	23	32	37	39	-
Hawthorne	33.9	70	118.4	92	69	85	68	84	68	80	66	71	69	16	37	40	42	-
Hayfield Pumps	33.7	1370	115.6	112	71	108	70	107	70	104	68	77	75	31	24	29	32	1529
Hayward	37.7	530	122.1	92	66	86	65	85	64	81	62	68	66	24	26	31	34	2909
Healdsburg	38.6	102	122.9	102	69	95	68	94	68	90	66	71	69	37	26	31	34	2572
Hemet	33.7	1655	117	109	70	104	69	103	69	101	67	74	72	40	20	25	28	-
Henshaw Dam	33.2	2700	116.8	99	68	94	67	93	67	90	66	71	69	38	15	22	26	3708
Hercules	38	15	122.3	91	66	87	65	86	65	82	64	69	67	25	30	35	38	823
Hermosa Beach	33.9	16	118.4	92	69	84	68	82	68	78	66	71	69	12	38	42	45	-
Hesperia	34.4	3191	117.3	105	67	101	65	100	65	97	63	70	68	38	14	21	25	1654
Hetch Hetchy	38	3870	119.8	93	62	89	61	88	61	85	59	65	63	32	14	21	25	4816
Highland	34.1	1315	117.2	106	70	102	69	101	69	97	68	74	72	36	26	31	34	-
Hillcrest Center	35.4	500	-	106	71	102	70	101	70	98	68	74	72	34	26	31	35	-

Hillsborough	37.6	352	122.3	90	66	82	65	80	65	74	64	68	66	23	30	35	37	-
Hilt	42	2900	122.6	97	64	93	62	92	62	89	60	66	64	39	5	13	18	-
Hollister	36.9	280	121.4	96	68	89	67	87	67	81	65	70	68	30	21	27	30	2725
Hollywood	34	384	118.4	96	70	89	69	87	69	83	67	72	70	20	36	41	44	-
Home Gardens	33.9	678	117.5	104	70	100	69	98	69	92	67	74	72	35	26	31	34	-
Hoopa	41	360	123.7	100	67	92	66	91	66	87	64	69	67	25	23	28	31	-
Huntington Beach	33.7	40	117.8	91	69	83	67	81	67	76	66	71	69	14	34	38	41	-
Huntington Lake	37.2	7020	119.2	80	55	77	54	76	53	73	51	58	56	25	3	11	16	7632
Huntington Park	34	175	118	98	70	90	69	88	69	84	67	72	70	20	38	42	45	-
Idlewild	41.9	1250	124	103	68	96	66	95	66	92	65	69	67	40	18	24	27	-
Idria	36.4	2650	120.7	97	66	92	65	91	64	87	62	68	66	27	24	29	32	3128
Idyllwild	33.7	5397	116.7	93	62	89	61	88	61	84	60	67	65	35	9	16	21	-
Imperial AP	32.8	-59	115.6	114	74	110	73	109	73	106	72	81	79	31	26	31	34	1060
Imperial Beach	32.5	23	117.1	87	69	82	68	81	68	78	67	71	69	10	35	39	41	1839
Imperial CO	32.9	-64	115.6	112	73	108	72	107	72	104	71	80	78	31	29	34	36	976
Independence	36.8	3950	118.2	104	61	101	60	100	60	97	60	65	63	31	12	19	24	-
Indio	33.7	11	116.3	115	75	112	75	111	75	107	74	81	79	30	24	29	32	1059
Inglewood	33.9	105	118	92	68	85	67	84	67	80	65	70	68	15	37	40	42	-
Inyokern NAS	35.7	2440	117.8	110	71	106	68	105	68	102	66	75	71	37	15	22	26	2772
Ione	38.3	298	120.9	101	70	97	68	95	68	91	67	72	70	38	23	28	31	-
Iron Mtn	34.1	922	115.1	116	75	112	74	111	74	108	73	80	78	26	29	34	36	1251
Irvine	33.7	50	118	96	69	88	68	86	68	82	67	72	70	27	33	37	40	-
Isla Vista	34.5	40	119.9	90	69	83	67	81	67	77	65	70	68	20	33	38	40	-
Jess Valley	41.3	5300	120.3	92	59	89	58	88	58	84	56	63	61	35	-7	-2	4	7045
John Wayne AP	33.6	115	117.9	98	70	91	68	89	68	84	67	72	70	26	33	37	39	1496
Julian Wynola	33.1	3650	116.8	96	66	91	64	90	64	87	62	69	67	39	20	24	26	4049
Kentfield	38	120	122.6	97	66	91	65	89	65	84	63	70	68	35	27	32	35	3009
Kerman	36.6	216	120.1	105	73	101	71	100	70	97	68	75	73	34	24	28	30	1262
Kern River PH 1	35.5	970	118.8	106	72	103	71	102	71	99	69	75	73	26	30	35	37	1878
Kern River PH 3	35.8	2703	118.6	103	69	100	68	99	68	96	66	72	70	34	19	25	28	2891

Kettleman Stn	36.1	508	120.1	104	71	100	70	98	70	93	68	74	72	31	26	31	34	2180
King City	36.2	320	121.1	94	67	90	65	89	65	85	64	70	68	36	20	26	29	2639
Kingsburg	36.4	297	119.6	104	73	101	71	100	71	97	69	75	73	36	24	30	34	1300
Klamath	41.5	25	124.1	79	62	71	60	70	60	66	58	64	61	18	26	31	33	4509
Knights Ferry	37.8	315	120.6	103	70	99	68	98	68	94	67	73	71	37	19	25	28	-
La Canada-Flintridge	34.2	1365	118	99	69	95	68	93	68	88	66	72	70	30	32	36	38	-
La Crescenta-Montrose	34.2	1565	118	98	69	94	68	92	68	87	66	72	70	33	31	35	37	-
La Habra	33.9	305	118	100	69	94	68	92	68	87	67	72	70	27	30	35	37	-
La Habra Heights	34	400	118	100	69	94	68	92	68	87	67	72	70	27	30	35	37	-
La Mesa	32.8	530	117	94	70	88	69	87	69	84	67	72	70	23	34	39	41	1567
La Mirada	33.9	115	118	99	70	91	69	89	69	85	68	73	71	26	31	36	38	-
La Palma	33.9	75	118	98	69	92	68	90	68	85	67	72	70	25	31	35	38	-
La Puente	34	320	118	101	71	97	70	95	70	91	69	74	72	28	31	36	38	-
La Quinta	33.8	400	116.3	116	74	112	73	111	73	108	72	79	78	34	26	32	34	332
La Riviera	38.6	190	121.3	104	71	100	70	98	70	94	68	73	71	32	30	35	37	1025
La Verne	34.1	1235	118	101	69	97	68	95	68	91	67	73	71	34	29	34	36	-
Ladera Heights	34.1	100	118.4	91	67	84	67	83	67	79	66	71	69	14	37	40	42	383
Lafayette	37.9	535	122.1	100	69	94	67	92	67	87	66	71	69	32	24	29	32	-
Laguna Beach	33.5	35	117.8	91	69	83	68	81	68	76	66	71	69	18	30	33	36	2222
Laguna Niguel	33.6	500	117.7	95	67	87	66	85	65	81	63	71	67	22	33	37	40	-
Lake Arrowhead	34.2	5205	117.2	90	62	86	61	85	61	81	59	66	64	26	13	20	24	5310
Lake Elsinore	33.7	1233	117.3	105	70	101	69	100	69	97	68	74	72	39	22	27	30	827
Lake Los Angeles	34.7	2300	117.8	106	68	102	67	101	67	98	66	72	70	35	12	17	20	1455
Lake Spaulding	39.3	5156	120.6	89	58	86	57	85	57	83	55	62	60	34	3	11	16	6447
Lakeland Village	33.6	1233	117.3	105	70	101	69	100	69	97	68	74	72	39	12	27	30	827
Lakeport	39	1347	122.9	97	67	93	66	92	65	88	63	69	67	41	20	26	29	3728
Lakeshore	40.9	1075	119.2	104	69	100	68	99	68	95	66	71	69	28	29	34	36	-
Lakeside	32.8	690	117	95	69	90	68	89	68	86	66	72	70	20	26	31	34	-
Lakewood	33.9	45	118	98	70	90	68	88	68	84	66	72	70	22	33	37	40	-

Lamont	35.3	500	120	106	72	102	71	101	71	98	69	75	73	34	26	32	35	-
Lancaster	34.7	2340	118.2	106	68	102	67	101	67	98	66	72	70	35	12	17	20	-
Larksfield-Wikiup	38.5	170	122.8	99	69	96	68	95	68	92	66	71	69	35	24	27	29	1249
Larkspur	37.9	20	122.5	97	68	91	66	89	66	84	64	69	68	34	28	33	35	-
Las Plumas	39.7	506	121.4	104	71	101	70	100	70	96	68	73	71	32	24	29	32	-
Lathrop	37.8	22	121.3	103	71	98	69	97	69	93	67	73	71	35	24	28	30	1300
Lava Beds	41.7	4770	121.5	93	59	89	58	88	58	84	56	63	61	41	-1	4	11	-
Lawndale	33.9	66	118	92	69	85	68	84	68	80	66	71	69	16	37	40	42	-
Le Grand	37.2	255	120.3	101	70	96	68	95	68	91	66	72	70	38	23	28	31	2696
Lemon Grove	32.7	437	117.2	96	71	88	69	87	69	84	67	72	70	19	34	38	41	-
Lemoncove	36.4	513	119	105	72	102	70	101	70	98	68	72	70	38	25	38	41	2513
Lemoore NAS	36.3	228	120	104	72	101	71	100	71	97	69	74	72	37	19	25	28	2960
Lennox	33.9	71	117.8	92	69	85	68	84	68	80	66	71	69	16	37	41	44	-
Lincoln Village	38	12	121.3	101	70	96	68	95	68	91	67	72	70	37	24	28	30	1334
Linda	39	60	121.6	105	72	102	70	101	70	97	68	74	72	30	27	32	35	1160
Lindsay	36.2	395	119.1	105	72	101	71	100	71	97	69	74	72	40	24	29	32	2634
Little Panoche	36.8	677	120.7	100	68	94	67	92	67	86	66	71	69	33	23	28	31	-
Live Oak	39.2	75	121.7	105	70	102	69	101	69	97	69	73	71	36	24	29	32	1160
Livermore	37.7	490	122	100	69	95	68	93	68	88	67	71	70	35	22	25	28	3012
Livingston	37.3	165	120.7	103	72	100	70	99	70	95	68	74	72	39	24	30	34	1244
Llano Shawnee	34.5	3820	117.8	104	68	99	67	98	67	95	65	71	69	31	21	27	31	-
Lodgepole	36.6	6735	118.7	84	57	80	56	80	56	78	54	60	58	26	-4	1	7	-
Lodi	38.1	40	121.3	101	70	97	68	95	68	91	67	72	70	38	23	28	31	2859
Loma Linda	34	1150	117.5	106	70	103	69	102	69	99	67	74	72	36	27	32	35	-
Lomita	33.8	56	119	95	69	87	68	85	68	81	66	71	69	18	33	38	40	-
Lompoc	34.9	95	120.5	84	63	77	62	76	62	72	60	65	63	18	26	31	34	2888
Long Beach	33.7	34	118.2	97	70	88	68	86	67	82	65	65	63	18	35	31	34	-
Long Beach AP	33.8	25	118.2	99	71	90	69	88	68	84	66	73	71	21	33	38	41	1606
Loomis	38.8	408	121.2	107	71	103	70	102	70	98	69	74	72	39	21	27	30	-
Los Alamitos NAS	33.8	30	118.1	98	71	89	69	87	69	83	68	73	71	23	32	37	39	1740

Los Altos	37.3	163	122	96	68	88	65	86	64	80	62	70	68	26	28	33	35	-
Los Altos Hills	37.3	183	122.1	93	67	85	64	83	64	77	63	68	66	25	28	33	35	1103
Los Angeles AP	33.9	97	118.4	91	67	84	67	83	67	79	66	71	69	14	37	40	42	1819
Los Angeles CO	34	270	118.2	99	69	92	68	90	68	86	67	72	70	21	38	41	43	1245
Los Banos	37	120	120.9	100	70	96	68	94	68	88	67	72	70	42	22	28	31	2616
Los Banos Res	37	407	120.9	101	70	97	68	95	68	89	67	72	70	42	23	29	31	-
Los Gatos	37.2	365	122	98	69	90	67	88	67	82	66	71	69	32	26	31	34	2741
Los Serranos	34.1	714	117.7	104	70	100	69	98	69	94	68	74	72	35	27	32	35	706
Lucas Vly-Marinwood	38.3	20	122.6	79	63	74	62	71	61	65	59	64	62	12	30	35	37	874
Lucerne Valley	34.5	2957	117	105	67	101	66	100	66	98	64	71	69	38	12	19	24	-
Lynwood	33.9	88	118	98	70	90	69	88	69	83	67	72	70	21	32	37	39	-
Madera	37	268	120.1	105	72	101	70	100	70	96	68	74	72	40	24	29	32	2673
Madera Acres	36.9	275	120.1	105	72	101	70	100	70	96	68	74	72	40	24	29	32	1250
Manhattan Beach	33.9	120	118	91	69	84	68	83	68	79	66	71	69	12	38	42	45	-
Manteca	37.8	34	121.2	102	70	97	68	95	68	91	67	72	70	37	24	29	32	-
Manzanita Lake	40.5	5850	121.6	87	58	84	57	83	57	79	55	61	59	34	-3	2	8	7617
March AFB	33.9	1511	117.3	103	70	99	68	98	67	94	65	74	71	34	23	30	33	2089
Maricopa	35.1	675	119.4	106	71	102	70	101	70	98	68	74	72	29	25	30	33	2302
Marina	36.7	20	121.8	86	66	77	63	75	63	70	61	67	64	18	32	37	40	-
Marina del Rey	34.1	40	118.5	91	69	84	68	83	68	79	66	71	69	12	38	42	45	383
Markley Cove	38.5	480	122.1	104	70	99	69	97	69	93	67	72	70	39	23	29	31	-
Martinez FS	38	40	122.1	99	67	94	66	92	66	88	65	71	69	36	28	33	35	-
Marysville	39.2	60	121.6	105	72	102	70	101	70	97	68	74	72	36	27	32	35	2552
Mather AFB	38.6	96	121.3	104	71	100	70	98	70	94	68	73	71	35	28	33	35	-
Maywood	34	170	118	97	70	91	69	89	69	85	67	72	70	21	34	38	41	-
McClellan AFB	38.7	86	121.4	105	71	102	70	100	70	96	68	74	71	35	23	28	21	2566
McCloud	41.3	3300	122.1	96	63	93	62	91	62	87	60	66	64	42	5	13	18	5990
McFarland	35.6	350	119.2	106	71	102	70	101	70	98	69	74	72	36	22	25	28	1162
McKinleyville	40.9	33	124.1	75	61	69	59	68	59	65	58	61	60	11	28	31	33	1995
Mecca FS	33.6	-180	116.1	115	75	111	75	110	75	107	74	81	79	30	24	29	32	1185

Mendota	36.7	169	120.4	105	73	101	71	100	70	97	68	75	73	34	24	28	30	1273
Menlo Park	37.4	65	122.3	94	67	86	65	84	65	78	63	69	67	25	27	32	34	-
Mentone	34.1	1700	117.1	106	70	102	69	101	69	98	67	74	72	34	27	32	35	741
Merced AP	37.3	153	120.6	103	71	100	69	99	69	95	67	73	71	36	21	27	30	2653
Mill Creek	35.1	2940	117	102	67	97	66	96	66	94	65	70	68	28	28	33	36	-
Mill Valley	37.9	80	122.6	97	68	91	66	89	66	84	64	70	68	28	28	33	35	3400
Millbrae	37.6	10	122.4	90	66	82	63	80	63	74	61	67	65	24	30	35	37	-
Milpitas	37.4	15	121.9	94	68	87	65	85	65	79	63	70	67	27	27	32	35	-
Mineral	40.4	4911	121.6	90	60	87	59	86	59	82	57	63	61	38	2	7	14	7257
Mira Loma	34	700	117.5	105	70	101	69	99	68	95	66	74	72	34	25	33	36	600
Miramar AFS	32.9	477	117.1	97	69	91	68	90	68	86	67	72	70	22	32	36	38	1532
Miramonte	34.4	750	119.1	102	71	97	69	95	69	91	68	73	71	38	25	29	32	771
Mission Viejo	33.6	350	118	95	67	87	66	85	65	81	63	71	67	22	33	37	40	-
Mitchell Caverns	34.9	4350	117.0	102	64	98	63	97	63	94	61	69	67	29	21	27	30	-
Modesto	37.6	91	121	102	73	99	70	98	70	95	68	75	72	36	25	30	33	2671
Moffett Field NAS	37.4	39	122.1	89	68	84	66	82	66	78	64	70	68	23	30	34	36	2511
Mojave	35.1	2735	118.2	106	68	102	67	101	67	98	66	71	69	35	16	22	26	3012
Mono Lake	38	6450	119.2	91	58	88	57	87	57	84	55	62	60	32	4	12	17	6518
Monrovia	34.2	562	118.3	100	69	96	68	94	68	90	67	73	71	30	33	38	41	-
Montague	41.8	2648	122.5	99	66	95	65	94	65	90	63	69	67	39	3	11	16	5474
Montclair	34	1220	117	104	69	100	68	98	68	94	66	73	71	35	28	33	35	-
Montebello	34	205	118.1	98	69	93	68	91	68	86	67	72	70	24	33	37	39	-
Monterey AP	36.6	245	121.9	86	65	77	62	75	62	70	61	66	63	20	30	35	38	3556
Monterey CO	36.6	345	121.9	87	65	78	62	76	62	71	61	66	63	20	32	37	40	3169
Monterey Park	34	380	118	99	69	94	68	92	68	87	67	72	70	23	30	35	37	-
Monticello Dam	38.5	505	122.1	105	71	100	70	98	70	94	68	73	71	39	26	31	34	-
Moraga	37.8	600	122.2	99	68	93	66	91	66	86	64	70	68	27	21	26	29	
Moreno Valley	33.9	1600	117.2	103	70	99	68	98	67	94	65	74	71	34	27	30	33	611
Morgan Hill	37.1	350	120	100	69	92	68	90	68	85	66	71	69	25	26	31	34	-
Morro Bay FD	35.4	115	120.9	88	65	82	64	80	64	76	62	67	65	14	31	36	38	-

Mount Baldy Notch	34.3	7735	117.6	80	58	76	57	75	56	71	54	61	59	32	4	10	14	-
Mount Diablo	37.9	2100	121.9	101	68	96	66	93	66	87	65	68	59	28	27	32	35	4600
Mount Hamilton	37.3	4206	121.7	95	59	88	58	86	58	81	56	63	61	18	18	24	27	4724
Mount Hebron RS	41.8	4250	122	92	60	88	59	86	59	82	57	63	61	42	-10	-4	0	-
Mount San Jacinto	33.8	8417	116.6	82	56	77	55	76	55	73	53	61	59	35	-1	4	11	-
Mount Shasta	41.3	3535	122.3	93	62	89	61	88	61	84	59	65	63	34	8	15	20	5890
Mount Wilson	34.2	5709	118.1	90	63	85	61	83	60	79	58	66	64	21	15	22	26	4296
Mountain Pass	35.5	4730	115.5	100	65	96	64	95	64	92	63	68	66	29	11	18	23	-
Mountain View	37.5	95	121.9	93	67	85	64	83	64	77	62	68	66	25	28	33	35	-
Muscoy	34.2	1400	117.3	105	71	101	69	100	68	96	66	75	72	37	26	31	34	614
Nacimiento Dam	35.8	770	120.9	100	68	94	66	92	66	88	64	70	68	35	22	28	31	-
Napa State Hospital	37.3	60	122.3	94	67	91	67	90	67	86	66	71	70	29	26	31	34	2749
National City	32.7	34	117	87	70	82	68	81	68	78	66	71	69	10	36	40	42	-
Needles AP	34.8	913	114.6	117	73	114	72	113	72	110	71	77	75	26	27	32	35	1391
Nevada City	39.3	2600	121	97	66	94	64	92	64	88	63	68	66	41	14	21	25	4900
Newark	37.5	10	122	94	68	89	67	87	67	82	65	70	68	24	29	34	36	-
Newhall Soledad	34.4	1243	118.6	104	70	100	68	99	68	95	67	73	71	42	27	33	36	-
Newman	37.3	90	121.1	104	71	99	69	97	69	93	67	73	71	38	22	28	31	-
Newport Beach	33.6	10	117.9	87	68	80	66	78	66	72	65	70	68	12	34	39	41	1952
Nipomo	35	330	120.5	90	66	83	64	82	63	78	61	67	65	23	25	31	33	1035
Norco	33.9	700	117	103	70	99	69	98	69	94	67	74	72	34	27	32	35	-
North Auburn	38.9	1300	121.1	103	69	100	67	99	67	95	66	72	69	33	25	30	33	1518
North Fork RS	37.2	2630	119.5	98	66	95	65	94	64	92	62	69	67	36	15	22	26	-
North Highlands	38.6	45	121.4	104	71	100	69	98	69	94	67	73	71	35	23	28	31	2566
North Hollywood	34.2	619	118.4	102	70	97	69	95	69	91	67	73	71	31	28	33	36	-
Northridge	34.2	875	118.5	101	70	96	69	94	69	90	67	73	71	36	30	35	38	650
Norwalk	33.9	97	118.1	99	69	90	68	88	68	84	67	72	70	26	31	35	37	-
Novato	38.1	370	122.5	94	64	87	63	85	63	80	61	68	66	30	25	30	32	-
Oakdale	37.8	215	120.9	102	71	99	69	97	69	93	67	73	71	37	22	28	32	-
Oakland AP	37.7	6	122.2	91	66	84	64	82	64	77	62	67	65	20	32	34	37	2909

Oakland Museum	37.8	30	122.2	96	68	89	66	87	65	82	63	69	67	20	31	33	36	-
Oakley	38	20	121.7	102	70	97	68	95	68	91	66	70	69	34	22	28	31	-
Oceano	35.1	20	120.6	93	69	86	64	84	64	80	62	67	65	18	30	34	37	795
Oceanside	33.2	10	117.4	84	69	80	67	78	67	74	65	70	68	10	33	37	39	-
Oildale	35.5	450	119	106	71	102	70	101	70	98	68	74	72	34	26	31	35	-
Ojai	34.5	750	119.3	102	71	97	69	95	69	91	68	73	71	38	25	29	32	2145
Olivehurst	39	64	121.6	105	72	102	70	101	70	97	68	74	72	36	27	32	35	1160
Ontario AP	34	934	117	105	70	101	69	99	68	95	66	74	72	34	26	33	36	1710
Opal Cliffs	37	125	122	94	68	88	66	86	66	81	64	69	67	28	27	32	35	1097
Orange	33.6	194	118	99	70	92	68	90	68	85	67	72	70	27	33	37	40	-
Orange Cove	36.6	431	119.3	104	71	100	69	99	69	97	68	73	71	38	25	30	33	2684
Orangevale	38.7	140	121.2	105	72	102	70	100	70	96	68	74	71	36	24	30	34	-
Orick Prairie Creek	41.4	161	124	80	61	75	60	74	60	70	59	63	61	23	25	30	33	4816
Orinda	37.9	550	122.2	99	68	93	66	91	66	86	64	70	68	32	21	26	29	-
Orland	39.8	254	122.2	105	71	102	70	101	70	97	68	73	71	36	22	28	31	2824
Orleans	41.3	403	123.5	104	70	97	68	95	68	91	66	71	69	42	21	27	30	3628
Orosi	36.5	400	119.3	104	73	101	70	100	70	96	69	75	73	36	24	30	34	1130
Oroville East	39.5	171	121.6	106	71	104	70	102	70	98	69	74	72	37	25	30	33	1385
Oroville RS	39.5	300	121.6	106	71	104	70	102	70	98	69	74	72	37	25	30	33	-
Otay-Castle Pk	32.6	500	117	87	68	81	66	79	65	74	63	69	67	10	33	38	40	-
Oxnard AFB	34.2	49	119.2	94	69	86	68	84	68	79	67	71	69	21	30	34	37	2068
Pacific Grove	36.7	114	122	87	66	78	63	76	63	71	61	67	64	19	31	35	37	-
Pacifica	37.6	13	122	87	65	79	62	77	62	71	60	66	64	16	31	35	37	-
Pacoima	34.3	895	118.4	104	71	99	70	98	70	94	68	74	72	35	29	34	37	664
Palermo	39.4	154	121.5	106	71	104	70	102	70	98	69	74	72	37	25	30	33	1170
Palm Desert	33.7	200	116.5	116	74	112	73	111	73	108	72	79	78	34	26	32	34	-
Palm Desert Country	33.7	243	116.3	116	74	112	73	111	73	108	72	79	78	34	26	32	34	374
Palm Springs	33.8	411	116.5	117	74	113	73	112	73	109	72	79	78	35	26	31	34	1109
Palmdale AP	34.6	2517	118.1	107	67	103	67	102	66	98	64	71	69	33	12	20	24	2929
Palmdale CO	34.6	2596	118.1	106	67	102	67	101	66	97	64	71	69	35	13	21	25	2908

Palo Alto	37.5	25	122.1	93	66	85	64	83	64	77	62	68	66	25	26	31	34	2891
Palomar Obsy	33.4	5545	116.9	90	62	85	61	84	61	80	59	66	64	22	16	20	23	4141
Palos Verdes	33.8	216	119	92	69	84	68	82	68	78	66	71	69	14	38	43	46	-
Panorama City	34.2	801	118.5	103	71	98	69	96	69	92	67	74	71	32	28	33	36	664
Paradise	39.8	1750	121.6	102	69	99	67	98	67	94	66	71	69	34	25	30	33	-
Paramount	33.9	70	117	98	70	90	69	88	69	84	67	72	70	22	32	37	40	-
Parker Res	34.3	738	114.2	115	74	112	73	111	73	108	72	79	77	26	32	37	40	1223
Parkway-South Sacramento	38.5	17	121.4	104	71	100	70	98	70	94	68	73	71	32	30	35	37	1150
Parlier	36.6	320	119.5	104	73	101	71	100	70	97	68	75	73	38	24	30	34	1262
Pasadena	34.2	864	118.2	99	69	94	68	92	68	88	67	73	71	30	32	37	40	1551
Paso Robles AP	35.7	815	120.7	104	66	97	66	96	66	92	65	70	68	40	19	23	26	2973
Paso Robles CO	35.6	700	120.7	102	65	95	65	94	65	90	65	69	67	44	16	20	23	2885
Patterson	37.4	97	121.1	101	72	96	70	94	69	90	67	74	72	36	24	30	34	1240
Pedley	34	718	117.5	105	70	101	69	99	68	95	66	74	72	34	26	33	36	600
Pendleton MCB	33.3	63	117.3	92	68	87	67	85	67	81	66	71	69	22	34	39	41	1532
Pendleton MCB Coast	33.2	24	117.4	84	69	80	67	79	67	75	65	70	68	10	39	44	46	1782
Perris	33.8	1470	117.2	105	70	101	69	100	69	97	68	74	72	39	22	27	30	-
Petaluma FS 2	38.2	16	122.6	98	69	92	67	90	67	85	66	72	69	31	24	29	32	2959
Pico Rivera	34	180	118	98	70	91	69	89	69	85	67	72	70	24	31	35	38	-
Piedmont	37.8	325	122	96	68	89	66	87	65	82	63	70	68	23	31	33	36	-
Pinnacles NM	36.5	1307	121.2	98	68	94	67	93	66	89	64	70	68	45	20	26	29	2956
Pinole	38	10	122.3	91	66	87	65	86	65	82	64	69	67	25	30	35	38	-
Pismo Beach	35.1	80	120.6	92	66	85	64	84	64	80	62	67	65	16	30	34	37	2756
Pittsburg	38	50	121.8	102	70	97	68	95	68	90	67	72	70	34	26	32	35	-
Placentia	33.9	323	118	101	69	93	68	91	68	87	67	73	71	28	30	34	37	-
Placerville	38.7	1890	120.8	101	67	98	66	97	66	93	65	70	68	42	20	26	29	4086
Placerville IFG	38.7	2755	120.8	100	66	97	65	96	65	92	64	69	67	42	23	28	31	-
Platina	40.4	2260	122.9	96	65	92	64	91	63	87	61	67	65	36	13	20	24	-
Pleasant Hill	37.9	102	122	96	68	93	67	92	67	88	65	70	68	34	25	30	33	-

Pleasanton	37.6	350	121.8	97	68	94	67	93	67	89	65	70	68	35	24	29	32	-
Point Arena	38.9	100	123.7	76	62	72	60	71	60	67	58	63	61	19	29	32	34	4747
Point Arguello	34.6	76	120.7	75	64	71	63	69	62	65	59	65	63	17	29	32	35	3826
Point Mugu	34.1	14	119.1	88	68	81	67	79	67	75	66	70	68	15	33	37	39	2328
Point Piedras Blancas	35.7	59	121.3	73	60	67	59	65	59	61	57	62	60	10	36	41	43	3841
Pomona Cal Poly	34.1	740	117.8	102	70	98	69	97	69	93	67	74	72	36	27	32	35	1971
Port Chicago ND	38	50	122	98	69	94	68	92	68	88	66	71	69	34	28	33	36	-
Port Hueneme	34.2	13	119	88	68	81	67	79	67	75	66	70	68	15	33	37	39	2334
Porterville	36.1	393	119	106	71	102	70	101	70	97	69	74	72	36	25	30	33	2456
Portola	39.8	4850	120.5	92	63	89	61	88	61	84	59	65	63	48	-9	-3	1	7111
Posey 3 E	35.8	4960	119	89	62	86	61	85	61	82	59	65	63	26	9	16	21	-
Potter Valley PH	39.4	1015	123.1	101	68	96	67	94	67	89	65	70	68	40	20	26	29	3276
Poway Valley	33	500	117	100	70	94	69	93	69	89	68	73	71	26	29	33	35	-
Priest Valley	36.2	2300	120.7	97	66	93	65	92	65	88	63	69	67	34	13	20	24	4144
Prunedale	36.6	260	121.7	86	66	83	65	82	64	79	62	68	66	20	26	31	34	1100
Quartz Hill	34.6	2428	118.2	106	68	102	67	101	67	98	66	72	70	35	12	17	20	1455
Quincy	39.9	3409	120.9	101	64	98	63	97	63	93	62	68	66	45	1	6	13	5763
Ramona Spaulding	33.1	1480	116.8	103	70	97	69	96	69	92	68	73	71	40	22	28	31	-
Rancho Bernardo	33	500	117.1	96	69	91	68	89	68	85	67	72	70	26	29	34	36	-
Rancho Cordova	38.6	190	121.3	104	72	100	69	98	69	94	68	74	71	35	26	31	33	-
Rancho Mirage	33.8	248	116.4	117	74	113	73	112	73	109	72	79	78	33	26	31	34	374
Rancho Palos Verdes	33.7	216	118.2	92	69	84	68	82	68	78	66	71	69	14	38	43	46	-
Rancho San Diego	32.8	300	117.0	94	69	86	68	85	68	82	66	71	69	30	34	38	41	404
Rancho Santa Margarita	33.6	116	117.6	95	67	87	66	85	65	81	63	71	67	22	33	37	40	496
Randsburg	35.3	3570	117.7	105	67	102	66	101	66	97	65	70	68	30	19	25	28	2922
Red Bluff AP	40.2	342	122.3	107	70	104	69	102	68	98	66	73	71	31	24	29	31	2688
Redding FS 4	40.6	470	122.4	107	69	103	68	101	68	97	67	72	70	30	26	31	34	2544
Redlands	34.1	1318	117.2	106	70	102	69	101	69	98	67	74	72	34	27	32	35	1993
Redondo Beach	33.8	45	118.3	92	69	84	68	82	68	78	66	71	69	12	37	42	44	-

Redwood City	37.5	31	122.2	90	67	86	66	85	66	81	64	69	67	28	28	33	35	2599
Reedley	36.6	344	119.7	104	71	101	70	100	70	96	68	74	72	40	24	30	34	-
Reseda	34.2	736	118.5	103	71	98	69	96	69	92	67	74	71	32	28	33	36	664
Rialto	34.1	1254	117	105	70	101	69	100	68	96	66	74	72	35	28	33	35	-
Richardson Grove	40	500	123.8	96	67	92	66	91	66	87	64	69	67	28	25	30	33	-
Richmond	37.9	55	121.6	88	65	84	64	82	64	77	62	67	65	17	31	36	38	2684
Ridgecrest	35.6	2340	117.8	110	70	106	68	105	68	102	66	75	71	35	15	22	26	-
Rio Del Mar	37	50	121.9	94	67	88	66	87	65	83	63	69	67	30	27	32	35	1097
Rio Linda	38.6	86	121.5	104	72	100	70	98	70	94	68	74	71	32	28	33	35	1290
Ripon	37.7	61	121.1	102	70	97	68	95	68	91	67	72	70	37	23	30	33	1240
Riverbank	37.7	133	120.9	102	73	99	70	98	70	95	68	75	72	36	25	30	33	1240
Riverside Exp Sta	34	986	117.4	106	71	102	69	101	69	97	67	75	72	36	29	34	36	-
Riverside FS 3	34	840	117.4	104	70	100	69	99	68	95	65	74	72	37	27	32	35	1818
Rocklin	38.8	239	121.2	108	72	104	70	103	70	99	69	74	72	39	20	26	29	3143
Rodeo	38.1	15	122.3	93	67	90	66	88	66	84	64	70	68	23	28	33	36	823
Rohnert Park	38.4	106	122.6	99	69	96	68	95	68	92	66	71	69	33	24	27	29	-
Rolling Hills	33.6	216	119	92	69	84	68	82	68	78	66	71	69	15	38	43	46	-
Rosamond	34.8	2326	118.2	106	68	102	67	101	67	98	66	71	69	35	16	22	26	1455
Roseland	38.4	167	122.7	99	69	96	68	95	68	92	66	71	69	35	24	27	29	1249
Rosemead	34	275	118	98	70	90	69	88	69	84	67	72	70	27	30	35	37	-
Rosemont	38.3	190	121.4	104	71	100	70	98	70	94	68	73	71	32	30	35	37	1025
Roseville	38.7	160	121.2	105	71	102	70	100	70	96	68	74	71	36	24	30	34	-
Rossmoor	33.8	20	118.1	92	67	85	64	83	64	79	62	71	69	19	32	37	39	-
Rowland Hts	33.9	540	118	99	70	93	69	91	69	86	68	73	71	27	29	34	36	-
Rubidoux	34	792	117	106	71	102	70	101	70	97	68	75	73	36	27	32	35	-
Sacramento AP	38.5	17	121.5	104	72	100	70	98	70	94	68	74	71	35	26	31	33	2843
Sacramento CO	38.6	84	121.5	104	71	100	70	98	70	94	68	73	71	32	30	35	37	-
Saint Helena	38.5	225	122.5	102	70	98	69	97	69	93	67	72	70	40	22	28	31	2878
Saint Mary's College	37.8	623	122.1	98	69	93	68	91	68	86	66	71	69	28	21	27	30	3543
Salinas 3 E	36.7	85	121.6	86	66	83	65	82	64	79	62	68	66	20	26	31	34	-

Salinas AP	36.7	69	121.6	85	67	82	65	81	64	78	62	69	66	20	28	33	35	2959
Salt Springs PH	38.5	3700	120.2	95	62	92	61	91	61	87	59	66	64	27	19	25	28	3857
Salyer RS	40.9	623	123.6	102	69	95	67	93	66	87	64	70	68	33	22	28	31	-
San Anselmo	38	50	122	95	67	89	66	87	66	82	65	70	68	32	26	31	33	-
San Antonio Canyon	34.2	2394	117.7	100	68	96	67	94	67	90	65	72	70	33	29	35	39	-
San Antonio Mission	36	1060	117.7	99	69	94	68	92	68	88	67	71	69	28	19	25	28	-
San Bernardino	34.1	1125	117.3	106	70	102	69	101	69	98	68	75	72	39	27	31	33	1777
San Bruno	37.7	20	122.4	86	66	80	64	78	64	73	62	67	65	23	30	35	38	3042
San Carlos	37.5	26	122.3	92	67	88	65	86	65	82	63	68	66	28	28	33	35	-
San Clemente	33.4	208	118.6	91	68	85	67	84	67	80	66	71	69	12	31	35	37	-
San Diego AP	32.7	13	117.2	88	70	83	69	82	69	78	68	72	70	13	38	42	44	1507
San Dimas	34	955	118.4	102	70	98	69	96	69	92	67	74	72	35	30	35	37	-
San Fernando	34.3	977	118.5	104	71	99	70	98	70	94	68	74	72	37	30	35	37	1800
San Francisco AP	37.6	8	122.4	89	66	83	64	80	63	74	61	67	64	20	31	35	38	3042
San Francisco CO	37.8	52	122.4	84	65	79	63	77	62	71	60	66	63	14	38	41	44	3080
San Gabriel FD	34.1	450	118.1	99	70	94	69	92	69	88	68	73	71	30	30	35	37	1532
San Gregorio 2 SE	37.3	275	122.4	87	66	81	63	79	63	74	61	68	65	30	27	32	35	-
San Jacinto	33.8	1535	117	110	70	105	69	104	69	102	68	75	73	41	20	26	29	2376
San Jose	37.4	67	121.9	94	68	86	66	84	66	78	64	70	68	26	29	34	36	2438
San Leandro	37.7	45	122.2	89	67	83	64	81	64	76	62	69	66	22	28	33	35	-
San Lorenzo	37.7	45	122.1	89	67	83	64	81	64	76	62	69	66	23	28	33	36	-
San Luis Dam	37.1	277	121.1	97	68	91	66	90	66	86	64	70	68	32	25	30	33	-
San Luis Obispo	35.3	320	120.7	94	63	87	63	85	63	81	62	67	65	26	30	33	35	2498
San Marcos	33.1	567	117.2	97	69	98	68	94	68	84	67	72	70	29	26	31	34	662
San Marino	34.2	300	118.1	100	69	95	68	93	68	88	66	73	71	28	30	35	37	-
San Mateo	37.5	21	122.3	92	67	84	65	82	65	76	63	68	66	24	31	36	38	2655
San Nicholas Island	33.2	504	119.5	85	66	78	65	76	65	70	64	69	67	11	39	43	45	2454
San Pablo	37.6	30	122.3	90	65	84	63	82	63	77	61	69	66	17	29	34	37	-
San Pedro	33.7	10	118.3	92	69	84	68	82	68	78	66	72	70	13	35	31	34	1819
San Rafael	38	40	122.6	96	67	90	65	88	65	83	63	71	68	29	30	35	37	2440

San Ramon	37.7	360	122	99	69	93	67	91	67	86	65	70	68	35	24	29	32	1369
Sandberg	34.8	4517	118.7	95	63	91	61	90	61	87	59	67	65	32	17	21	24	4427
Sanger	36.7	364	119.6	105	72	101	70	100	70	96	68	74	72	37	24	30	34	-
Santa Ana FS	33.8	115	117.8	98	70	91	68	89	68	84	67	72	70	26	33	35	38	1430
Santa Barbara AP	34.4	9	119.8	90	69	83	67	81	67	77	65	70	68	20	29	34	36	2487
Santa Barbara CO	34.4	5	119.7	91	69	84	67	82	67	78	65	70	68	22	33	38	40	1994
Santa Clara Univ	37.4	88	121.9	90	67	87	65	86	65	82	63	69	67	30	29	34	36	2566
Santa Clarita	34.4	1300	118.5	103	71	98	70	97	70	93	68	74	72	36	30	35	37	-
Santa Cruz	37	125	122	94	68	88	66	86	66	81	64	69	67	28	27	32	35	3136
Santa Fe Springs	33.9	280	118.1	99	69	90	68	88	68	84	67	72	70	24	31	36	38	-
Santa Maria AP	34.9	236	120.5	90	66	83	64	82	63	78	61	67	65	23	25	31	33	3053
Santa Monica	34	15	118.5	85	67	78	66	76	66	72	64	69	67	15	39	44	46	1873
Santa Paula	34.4	263	119.1	101	71	94	70	92	70	87	68	73	71	28	28	33	35	2030
Santa Rosa	38.5	167	122.8	99	69	96	68	95	68	92	66	71	69	35	24	27	29	2980
Santee	32.8	400	117	96	69	91	68	90	68	87	67	72	70	20	25	30	33	-
Saratoga	37.3	500	122	96	67	88	66	86	66	80	65	70	68	31	27	32	35	-
Sausalito	37.9	10	122.5	85	66	80	65	78	65	73	63	67	65	12	30	34	36	-
Sawyer's Bar RS	41.3	2169	123.1	100	66	95	65	93	64	88	62	68	66	38	14	21	25	4102
Scotia	40.5	139	124.4	78	61	74	60	73	60	69	58	63	61	19	28	33	35	3954
Scotts Valley	37	400	122	94	68	88	66	86	66	81	64	69	67	28	27	32	35	1097
Seal Beach	33.8	21	118.1	94	69	86	68	84	67	80	65	71	69	15	35	40	42	1519
Seaside	36.6	17	122.9	85	66	79	64	77	64	73	62	67	65	20	30	35	37	-
Sebastapol	38.4	102	122.8	99	69	96	68	95	68	92	66	71	69	35	24	27	29	1249
Selma	36.6	305	119.6	104	73	101	71	100	70	97	68	75	73	38	24	30	34	-
Sepulveda	34.2	818	118.5	103	71	98	69	96	69	92	67	74	71	32	28	33	36	664
Shafter	35.5	345	119.2	106	71	102	70	101	70	98	68	74	72	28	24	29	32	2185
Shasta Dam	40.7	1076	122.4	105	69	101	68	99	68	95	67	72	70	27	29	34	36	2943
Shelter Cove	40	110	124.1	80	61	73	60	72	59	68	57	63	61	15	34	39	41	-
Sherman Oaks	34.2	657	118.5	103	71	98	69	96	69	92	67	74	71	28	29	34	37	664
Sierra City	39.6	4230	120.1	96	62	93	61	92	61	89	59	66	64	43	12	19	24	-

Sierra Madre	34.2	1153	118.1	102	69	96	68	94	68	90	67	73	71	27	32	37	39	-
Sierraville RS	39.6	4975	120.4	94	60	91	59	90	59	86	57	64	62	44	-10	-4	0	6893
Signal Hill	33.5	100	118.2	99	70	90	69	88	68	84	66	72	70	19	35	39	42	-
Simi Valley	34.4	500	118.8	98	70	93	68	91	68	87	66	73	71	30	28	33	35	-
Solana Beach	33	15	117.3	87	68	83	67	81	67	77	65	70	68	10	35	39	41	-
Soledad	36.4	200	121.3	90	67	87	65	86	65	82	64	70	67	23	24	29	32	1020
Sonoma	38.3	70	122.5	101	70	96	69	94	69	90	67	72	70	40	22	28	31	2998
Sonora RS	38	1749	120.4	103	68	100	67	99	67	95	66	72	70	34	20	26	29	3537
Soquel	37	50	122	94	67	88	66	86	65	81	63	69	67	24	27	32	35	1097
South El Monte	34	270	118.1	101	72	97	70	95	70	91	68	74	72	28	31	36	38	-
South Entr Yosemite	37.5	5120	119.6	92	61	88	60	87	60	84	59	64	62	36	8	15	20	5789
South Gate	33.9	120	118.2	97	70	90	69	88	69	84	67	72	70	21	32	37	39	-
South Laguna	33.6	100	117.7	91	69	83	68	82	68	78	66	71	69	18	30	33	36	586
South Lake Tahoe	38.9	6200	120	85	56	82	55	79	55	71	54	60	58	33	-2	3	10	-
South Oroville	39.5	174	121.6	106	71	104	70	102	70	98	69	74	72	37	25	30	33	1385
South Pasadena	34	657	118.2	99	69	94	68	92	68	88	67	73	71	30	31	36	38	-
South San Francisco	37.7	10	122.4	87	67	81	64	78	64	72	62	68	65	20	32	36	38	-
South San Gabriel	34.1	450	118.1	99	70	94	69	92	69	88	68	73	71	73	30	35	37	431
South Whittier	33.9	300	118	100	70	92	69	90	69	84	68	73	71	30	31	36	38	-
South Yuba City	39.1	59	121.6	105	69	101	69	100	69	96	68	72	71	36	24	29	32	1160
Spring Valley	32.7	300	117	94	69	86	68	85	68	82	66	71	69	30	34	38	41	-
Squaw Valley	39.2	6235	120.2	88	57	85	56	84	56	80	54	61	59	40	-10	-4	0	-
Squirrel Inn	34.2	5680	117.2	86	61	82	60	81	60	77	58	65	63	23	12	18	22	5175
Stanford	37.5	23	122.1	93	66	85	64	83	64	77	62	68	66	25	26	31	34	1103
Stanton	33.6	45	118	98	69	91	68	89	68	84	67	72	70	24	31	36	38	-
Stockton AP	37.9	22	121.3	103	71	98	69	97	69	93	67	73	71	35	24	28	30	2806
Stockton FS 4	38	12	121.3	101	70	96	68	95	68	91	67	72	70	37	24	28	30	2846
Stony Gorge Res	39.6	791	122.5	104	70	99	69	97	69	93	67	72	70	37	21	27	30	3149
Strawberry Valley	39.6	3808	121.1	96	63	93	62	92	62	88	60	66	64	32	14	21	25	5120
Studio City	34.3	620	118.4	102	70	97	69	95	69	91	67	73	71	31	28	33	36	664

Suisun City	38.2	72	122	103	71	98	69	96	68	91	66	73	70	35	24	29	32	1299
Sun City	33.7	1420	117.2	105	70	101	69	100	69	97	68	74	72	39	22	27	30	827
Sunland	34.3	1460	118.3	107	71	102	70	100	70	96	68	74	72	36	28	33	36	-
Sunnyvale	37.3	97	122	96	68	88	66	86	66	80	64	70	68	26	29	34	36	2511
Susanville AP	40.4	4148	120.6	98	62	95	61	94	61	90	59	66	64	38	-1	4	11	6233
Taft	35.1	987	119.5	106	71	102	70	101	70	98	68	74	72	34	26	31	35	934
Tahoe City	39.2	6230	120.1	84	56	81	55	80	55	76	53	60	58	36	2	7	14	8085
Tahoe Valley AP	38.9	6254	120.0	85	56	82	55	81	55	77	53	60	58	38	-5	2	6	-
Tamalpais-Homestead Valley	37.9	25	122.5	97	68	91	66	89	66	84	64	70	68	28	28	33	35	874
Tarzana	34.2	800	118.6	104	71	99	69	97	69	93	68	74	71	27	27	32	35	664
Tehachapi	35.1	3975	118.5	97	66	93	65	92	65	89	64	69	67	33	13	20	24	4494
Tejon Rancho	35	1425	118.8	107	71	103	70	102	70	99	68	74	72	27	24	29	32	2602
Temecula	33.5	1006	117.2	101	69	96	68	95	68	91	67	73	71	34	24	29	32	-
Temple City	34.1	403	118.1	101	70	95	69	93	69	89	68	73	71	27	30	35	37	-
Termo	40.9	5300	120.5	95	60	92	59	91	59	87	57	64	62	37	-17	-11	-4	-
Thermal AP	33.6	-112	116.1	114	74	110	74	109	74	106	74	80	79	29	26	31	35	1154
Thermalito	37.9	25	121.6	106	71	104	70	102	70	98	69	74	72	37	25	30	33	-
Thousand Oaks	34.2	810	118.8	98	69	93	68	92	68	88	67	72	70	30	27	32	35	-
Three Rivers PH 1	36.5	1140	118.9	105	70	102	69	101	69	98	67	73	71	38	24	30	32	2642
Tiburon	37.9	90	122.5	85	66	80	65	78	65	73	63	67	65	12	30	34	36	-
Tiger Creek PH	38.5	2355	120.5	100	66	96	65	95	65	92	63	69	67	36	20	26	29	3795
Torrance	33.8	110	118.3	93	69	86	68	84	68	80	66	71	69	18	32	37	39	1859
Tracy Carbona	37.7	140	121.4	102	70	97	68	95	68	90	67	72	70	38	24	29	32	2704
Tracy Pumps	37.8	61	121.4	104	71	99	69	97	69	92	68	73	71	39	23	28	31	-
Travis AFB	38.3	72	121.9	103	71	98	69	96	68	91	66	73	70	35	24	29	32	2725
Trinity Dam	40.8	2500	122.8	99	65	94	64	92	64	88	62	68	66	37	17	24	28	-
Trona	35.8	1695	117.4	113	72	109	70	108	70	105	68	76	73	35	18	24	27	2415
Truckee RS	39.3	5995	120.2	90	58	87	57	86	57	82	55	62	60	40	-10	-4	0	8230
Tujunga	34.3	1820	118.3	103	70	99	69	98	69	94	67	73	71	36	20	26	29	-

Tulare	36.2	290	119.4	105	72	101	71	100	71	96	69	74	72	39	24	30	34	-
Tulelake	42	4035	121.5	92	60	88	59	87	59	83	57	63	61	41	-5	0	6	6854
Turlock	37.5	100	120.9	104	72	100	70	99	70	95	68	74	72	40	24	30	34	-
Turntable Creek	40.8	1067	120.9	105	69	101	68	99	68	95	66	72	70	28	24	29	32	-
Tustin Foothills	33.8	500	117.8	99	71	92	69	90	69	85	68	73	71	27	28	31	34	550
Tustin Irvine Rch	33.7	118	117.8	99	71	92	69	90	69	85	68	73	71	27	28	31	34	1856
Twentynine Palms	34.1	1975	116.1	110	71	107	70	106	70	103	69	76	74	31	21	26	29	1973
Twin Lakes	38.7	7829	119.1	73	49	64	47	62	47	57	46	53	50	30	-7	-2	4	9196
Twitchell Dam	35	582	120.3	99	70	93	68	92	68	88	66	71	69	26	26	31	34	-
UCLA	34.1	430	118.4	93	69	86	68	84	68	80	66	71	69	20	39	43	46	1509
Ukiah	39.2	623	123.2	100	70	97	69	96	69	92	68	72	71	42	22	28	31	2958
Union City	37.6	5	122.1	90	67	87	66	85	65	81	63	69	67	20	25	30	33	-
Upland	34.1	1605	117.7	102	69	98	68	96	68	92	66	73	71	31	29	34	36	2175
Upper Lake RS	39.2	1347	123	98	68	95	67	94	66	91	64	73	71	39	18	34	36	-
Upper San Leandro	37.8	394	122.1	93	67	87	66	85	65	80	63	69	67	22	28	33	35	-
Vacaville	38.4	105	122	103	71	100	70	98	70	94	68	73	71	40	23	28	31	2788
Valinda	34	340	117.9	102	70	98	69	96	69	92	68	74	72	28	31	36	38	-
Valle Vista	33.8	1655	116.9	109	70	104	69	103	69	101	67	74	72	40	20	25	28	-
Vallejo	38.1	85	122.3	93	67	90	66	88	66	84	64	70	68	23	28	33	36	-
Valyermo RS	34.5	3600	117.9	100	67	96	66	95	66	91	65	70	68	41	12	19	24	3870
Van Nuys	34.2	708	118.5	103	71	98	69	96	69	92	67	74	71	30	28	33	39	664
Vandenburg AFB	34.7	368	122.8	85	62	77	61	75	61	71	60	64	62	16	30	35	37	3451
Ventura	34.3	341	119.3	89	68	82	67	80	67	76	66	70	68	15	29	34	36	-
Victorville Pumps	34.5	2858	117.3	105	67	101	65	100	64	97	62	70	68	39	14	24	27	3191
View Park	34	300	118.3	95	69	88	68	85	68	78	66	71	69	18	36	40	43	-
Villa Park	33.8	300	117.8	99	70	92	68	90	68	85	67	72	70	27	33	37	40	550
Vincent	34.5	3135	118.1	105	67	101	65	100	65	96	64	71	69	33	10	18	22	1455
Visalia	36.3	325	119.3	103	71	100	70	99	70	96	69	73	72	38	25	30	33	2459
Vista	33.2	510	117.2	96	69	90	68	89	68	85	67	72	70	16	30	35	37	-
Volta PH	40.5	2220	120.9	101	66	98	65	97	65	93	63	69	67	33	21	27	30	-

Walnut	34	550	117.9	101	70	97	69	96	69	92	69	74	72	30	28	33	35	-
Walnut Creek	37.9	245	122.1	100	69	94	67	92	67	87	66	71	69	32	23	29	31	-
Walnut Grove	38.2	23	121.5	102	70	98	69	96	69	92	68	72	71	37	24	30	32	-
Walnut Park	33.9	45	118.2	92	69	84	68	82	68	78	66	71	69	12	37	42	44	450
Warner Springs	33.3	3180	116.6	100	67	95	66	94	66	91	65	71	69	40	15	22	26	3591
Wasco	35.6	333	119.3	105	71	101	70	100	70	97	68	74	72	36	23	28	31	2466
Watsonville	36.9	95	121.8	86	66	82	64	81	63	79	61	68	65	22	28	33	35	3418
Weaverville RS	40.7	2050	122.9	100	67	95	66	93	65	89	63	69	67	46	10	17	22	4992
Weed FD	41.4	3590	122.4	92	63	89	62	88	61	84	59	65	63	35	4	12	17	-
West Athens	33.9	25	118.3	92	69	85	68	84	68	80	66	71	69	18	32	37	39	450
West Carson	33.8	100	118.3	92	69	87	68	85	68	81	66	71	69	18	32	37	39	-
West Compton	33.9	71	118.3	97	69	90	68	88	68	83	67	72	70	21	33	37	39	450
West Covina	34	365	117.9	102	70	98	69	96	69	92	68	74	72	34	29	34	36	-
West Hollywood	34	290	118.4	95	70	89	69	87	69	82	67	72	70	20	38	42	45	-
West Pittsburg	38	12	121.9	102	70	97	68	95	68	90	67	72	70	34	26	32	35	-
West Puente Valley	34	500	117.9	101	71	97	70	95	70	91	68	73	71	26	31	36	39	-
West Sacramento	38.6	19	121.5	104	72	100	70	98	70	94	68	74	71	35	26	31	33	1290
West Whittier-Los Nietos	34	320	118.1	99	69	90	68	88	68	84	67	72	70	24	31	35	38	-
Westlake Village	34.2	750	118.8	103	71	99	70	98	70	94	69	73	71	26	26	30	33	-
Westminster	33.8	38	118	95	70	88	68	86	68	81	67	72	70	23	33	38	41	-
Westmont	33.9	110	118.3	96	70	89	69	87	69	83	67	72	70	20	36	41	44	400
Whiskeytown Res	40.6	1295	122.6	105	69	101	68	100	68	96	67	72	70	31	25	30	33	-
White Mtn 1	37.5	10150	119.3	73	49	69	47	68	47	65	45	53	50	37	-15	-9	-6	-
White Mtn 2	37.6	12470	119.3	61	42	58	41	57	41	54	40	46	43	38	-20	-15	-12	-
Whittier	34	320	118	99	69	90	68	88	68	84	67	72	70	24	31	35	38	-
Wildomar	33.6	1255	117.3	103	70	99	69	98	69	94	68	74	72	36	23	28	30	827
Wildrose RS	36.3	4100		100	64	97	63	96	63	93	61	68	66	33	13	20	24	-
Williams	39.2	85	122.2	104	71	100	70	98	70	94	68	73	71	36	24	29	32	-

Willits	39.4	1350	123.3	95	66	89	65	87	64	82	62	68	66	38	18	24	27	-
Willow Brook	33.9	60	118.2	97	70	90	69	88	69	83	67	72	70	21	35	39	42	-
Willow Creek	41	461	123	104	70	98	68	96	68	92	66	71	69	35	22	28	31	-
Willows	39.5	140	122.2	104	71	100	70	98	70	94	68	73	71	36	22	28	31	2836
Windsor	38.5	130	122.8	99	69	96	68	95	68	92	66	71	69	35	24	27	29	1249
Winters	38.5	135	122	104	71	99	70	97	70	93	68	73	71	38	24	29	32	2593
Winton	37.4	168	120.6	103	71	100	69	99	69	95	67	73	71	36	21	27	30	1244
Woodcrest	33.9	1500	117.4	104	70	100	69	99	68	95	65	74	72	37	27	32	35	611
Woodfords	38.8	5671	119.8	92	59	89	58	88	58	84	56	63	61	32	0	5	12	6047
Woodlake	36.3	500	119.1	103	71	100	70	99	70	96	69	73	72	38	25	30	33	1130
Woodland	38.7	69	121.8	106	72	101	71	100	71	96	69	74	72	40	25	30	33	2708
Woodland Hills	34.2	944	118.6	104	71	99	70	97	70	93	68	74	72	32	26	31	34	664
Woodside	37.5	75	122.3	92	67	84	66	82	65	76	63	69	67	24	22	28	31	-
Yorba Linda	33.9	350	117.8	102	70	94	69	92	69	88	68	73	71	31	30	35	37	1643
Yosemite Park Hq	37.7	3970	119.6	97	63	94	62	93	62	90	60	67	65	38	11	18	23	4785
Yreka	41.7	2625	122.6	99	66	95	65	94	65	90	64	69	67	39	8	15	20	5395
Yuba City	39.1	70	121.6	105	69	101	69	100	69	96	68	72	71	36	24	29	32	-
Yucaipa	34	2600	117	106	68	102	67	101	67	98	65	73	71	35	27	32	35	-
Yucca Valley	34.2	2600	116.4	108	71	105	70	104	70	101	69	75	73	32	19	24	27	862

***Heating Degree Day** is a unit, based on temperature difference and time, used in estimating fuel consumption and specifying nominal annual heating load of a building. For any one day when the mean temperature is less than 65ºF (18ºC), there exist as many degree days as there are Fahrenheit degrees difference in temperature between mean temperature for the day and 65ºF (18ºC).

KEY TO ABBREVIATIONS:

AFB	Air Force Base
AFS	Air Force Station
AP	Airport
CO	City/County Office
FD	Fire Department
FS	Fire Station
MCB	Marine Corps Base
MCWB	Mean Coincident Wet Bulb
NAS	Naval Air Station
NM	National Monument
PH	Power House
RS	Ranger Station

(This page intentionally left blank.)

Joint Appendix JA3

Appendix JA3 – Time Dependent Valuation (TDV)

JA3.1 Scope and Purpose

Time dependent valuation (TDV) is the currency used to compare energy performance when the performance compliance method is used. TDV is also used to evaluate the cost effectiveness of measures and to perform other codes analysis. TDV replaces source energy, which was used to compare performance prior to the 2005 Standards.

TDV consists of large data sets that convert electricity, gas or propane to TDV energy. The rate of conversion varies for each hour of the year, for each climate zone and for each energy type (electricity, natural gas or propane). The conversion factors also vary by building type: low-rise residential and other building types, including nonresidential, hotel/motel and high-rise residential. There are a total of 144 hourly data sets (16 climate zones x 3 fuel types x 3 building types) where the 3 building types are residential 30 year, nonresidential 15 year, nonresidential 30 year. The actual TDV data may be downloaded from the Energy Commission's website.

Because of the length, the actual data is not published in this appendix.

JA3.2 Summary of Data

Table 3-1 through Table 3-3 give a statistical summary of the TDV conversion factors for electricity, natural gas and propane. Each table has the annual minimum, maximum, and average for each climate zone and building type.

(a) Table 3-1 – TDV Statistical Data – Electricity (kBtu/kWh)

(b) Table 3-2 – TDV Statistical Data – Natural Gas (kBtu/therm)

(c) Table 3-3 – TDV Statistical Data – Propane (kBtu/therm)

Table 3-1 – TDV Statistical Data – Electricity (kBtu/kWh)

	Residential			Nonresidential (15yr)			Nonresidential (30 yr)		
Climate Zone	**Minimum**	**Average**	**Maximum**	**Minimum**	**Average**	**Maximum**	**Minimum**	**Average**	**Maximum**
1	14.13	27.22	309.69	13.26	28.21	423.98	12.99	27.21	333.97
2	13.92	26.97	2755.84	13.06	27.97	334.02	12.81	27.00	2992.60
3	14.07	27.15	2441.14	13.19	28.12	2924.14	12.93	27.13	2648.86
4	13.95	27.01	1866.06	13.22	28.16	2324.98	12.97	27.18	2028.71
5	14.15	27.25	669.24	13.32	28.27	873.02	13.05	27.28	724.78
6	14.14	26.96	1501.89	13.53	28.11	1546.57	13.17	27.13	1632.17
7	14.20	27.06	662.28	13.51	28.12	1016.86	13.15	27.12	717.65
8	13.84	26.61	923.37	13.63	28.23	1103.70	13.27	27.24	1008.16
9	13.82	26.58	1878.92	13.57	28.15	2072.04	13.21	27.17	2052.46
10	13.81	26.58	682.02	13.52	28.10	917.99	13.16	27.12	743.46
11	13.96	27.02	1533.26	13.16	28.08	2162.91	12.93	27.13	1665.42
12	13.95	27.01	1507.16	13.16	28.09	2112.00	12.93	27.14	1637.22
13	13.89	26.94	2537.01	13.10	28.02	3109.71	12.86	27.05	2757.28
14	13.68	26.42	1911.10	13.51	28.09	2454.87	13.16	27.11	2090.42
15	13.73	26.48	2068.49	13.52	28.10	2533.73	13.17	27.12	2261.44
16	14.63	27.54	1286.61	13.99	28.66	1591.54	13.62	27.65	1396.28

Table 3-2 – TDV Statistical Data – Natural Gas (kBtu/therm)

	Residential			Nonresidential (15yr)			Nonresidential (30 yr)		
Climate Zone	**Minimum**	**Average**	**Maximum**	**Minimum**	**Average**	**Maximum**	**Minimum**	**Average**	**Maximum**
1	330.15	351.04	378.53	226.53	253.18	288.62	259.47	285.66	320.39
2	330.15	351.04	378.53	226.53	253.18	288.62	259.47	285.66	320.39
3	330.15	351.04	378.53	226.53	253.18	288.62	259.47	285.66	320.39
4	330.15	351.04	378.53	226.53	253.18	288.62	259.47	285.66	320.39
5	330.15	351.04	378.53	226.53	253.18	288.62	259.47	285.66	320.39
6	330.33	351.58	379.63	226.75	254.56	291.68	259.69	287.01	323.37
7	330.41	352.40	381.47	226.80	255.27	293.31	259.74	287.70	324.97
8	330.33	351.58	379.63	226.75	254.56	291.68	259.69	287.01	323.37
9	330.33	351.58	379.63	226.75	254.56	291.68	259.69	287.01	323.37
10	330.33	351.58	379.63	226.75	254.56	291.68	259.69	287.01	323.37
11	330.15	351.04	378.53	226.53	253.18	288.62	259.47	285.66	320.39
12	330.15	351.04	378.53	226.53	253.18	288.62	259.47	285.66	320.39
13	330.15	351.04	378.53	226.53	253.18	288.62	259.47	285.66	320.39
14	330.33	351.58	379.63	226.75	254.56	291.68	259.69	287.01	323.37
15	330.33	351.58	379.63	226.75	254.56	291.68	259.69	287.01	323.37
16	330.33	351.58	379.63	226.75	254.56	291.68	259.69	287.01	323.37

Table 3-3 – TDV Statistical Data – Propane (kBtu/therm)

	Residential			Nonresidential (15yr)			Nonresidential (30 yr)		
Climate Zone	**Minimum**	**Average**	**Maximum**	**Minimum**	**Average**	**Maximum**	**Minimum**	**Average**	**Maximum**
1	567.80	626.404	686.90	451.71	495.37	540.44	462.53	505.74	550.36
2	567.80	626.404	686.90	451.71	495.37	540.44	462.53	505.74	550.36
3	567.80	626.40	686.90	451.71	495.37	540.44	462.53	505.74	550.36
4	567.80	626.40	686.90	451.71	495.37	540.44	462.53	505.74	550.36
5	567.80	626.40	686.90	451.71	495.37	540.444	462.53	505.74	550.36
6	567.80	626.40	686.90	451.71	495.37	540.44	462.53	505.74	550.36
7	567.80	626.40	686.90	451.71	495.37	540.44	462.53	505.74	550.36
8	567.80	626.40	686.90	451.71	495.37	540.44	462.53	505.74	550.36
9	567.80	626.40	686.90	451.71	495.37	540.44	462.53	505.74	550.36
10	567.80	626.404	686.90	451.71	495.37	540.44	462.53	505.74	550.36
11	567.80	626.404	686.90	451.71	495.37	540.44	462.53	505.74	550.36
12	567.80	626.40	686.90	451.71	495.37	540.44	462.53	505.74	550.36
13	567.80	626.40	686.90	451.71	495.37	540.44	462.53	505.74	550.36
14	567.80	626.40	686.90	451.71	495.37	540.44	462.53	505.74	550.36
15	567.80	626.404	686.90	451.71	495.37	540.44	462.53	505.74	550.36
16	567.80	626.40	686.90	451.71	495.37	540.44	462.53	505.74	550.36

Joint Appendix JA4

Appendix JA4 – U-factor, C-factor, and Thermal Mass Data

JA4.1 Scope and Purpose 2
JA4.1.1 Introduction 2
JA4.1.2 California Energy Commission Approved Software 2
JA4.1.2.1 Determining R-value and U-factor of Construction Assemblies 3
JA4.1.2.2 Accounting for Continuous Insulation R-value 4
JA4.1.2.3 Accounting for Unusual Construction Layers 5
JA4.1.2.4 Double Walls 5
JA4.1.3 Tapered Insulation 6
JA4.1.4 Insulating Layers on Mass and Other Walls 6
JA4.1.5 Wood Based Sheathing R-values 7
JA4.1.6 Framing Percentages for Calculating U-factors 7
JA4.1.7 R-values and U-factors for Medium-Density Closed Cell and Low-Density Open Cell Spray Polyurethane Foam (SPF) Insulation: 8
JA4.2 Roofs and Ceilings 11
JA4.3 Walls 30
JA4.4 Floors and Slabs 45
JA4.5 Miscellaneous Construction 58

JA4.1 Scope and Purpose

JA4.1.1 Introduction

The values in this appendix must be used for all residential and nonresidential prescriptive compliance calculations. California Energy Commission approved compliance software may make adjustments to the values in these tables using procedures described in this appendix.

The data tables are organized first by roofs, walls, and floors. For each, the data is further organized by construction type, beginning with wood framed construction, followed by metal framed construction, concrete and special construction assemblies. Each table features a letter/number coordinate system (shaded in gray) that can be used as an identifier for each value, i.e. 4.2.1-A10 indicates Table 4.2.1, Column A, Row 10. Construction assembly descriptions shall be concatenated first by row and then by column. For example, the descriptions of 4.2.1.-A20 and 4.3.1-H3 and shall be as follows (abbreviations are acceptable):

Wood Framed Attic, Trusses@24 inch. OC, R-30 attic insulation, No continuous insulation
Wood Framed Wall, Wd 2x4 @16 inch OC, R-13 cavity insulation, R-14 continuous insulation

The R-value representing the component(s) of a construction assembly may be rounded to the nearest whole R-value. If a construction assembly is not adequately represented in the tables below, the permit applicant or the manufacturer of the product may request the California Energy Commission approve alternative U-factors for the construction assembly. The California Energy Commission Executive Director will grant such approval, after reviewing submittals and supporting information from the applicant and the merits of the information to support the intended use. Acceptable calculation methods for determining a construction component's R-value or overall assembly U-factor are based on ASHRAE *Handbook of Fundamental* procedures, such as:

(a) Testing: Guarded Hot Plate (ASTM C177)

Heat Flow Meter (ASTM C518)

Hot Box Apparatus (ASTM C1363)

(b) Series/Parallel Path Calculation Method for wood framed assemblies of roof/ceilings, walls (above and below grade), and floors.

(c) Modified Zone Method for roof/ceilings, walls, and floor constructions that have metal framing.

New component(s) of a construction assembly approved by the Executive Director will be published as an addendum to this appendix for use by all compliance authors. Addenda may consist of new tables or additional rows or columns to existing tables.

NOTE: Insulation must be certified in accordance to Section 110.8(a).

JA4.1.2 California Energy Commission Approved Software

California Energy Commission approved software used for performance or prescriptive calculations may make adjustments to the data contained in this appendix to account for the special circumstances of particular constructions. This section defines the rules for making these

adjustments. These adjustments may not be made when the tables are used manually. Software may have input screens where the user may choose a construction by entering the cavity insulation (or insulation penetrated by framing); the continuous insulation; and other factors such as framing spacing. To the software user, the process of using these tables may look very much like a traditional U-factor calculation.

JA4.1.2.1 Determining R-value and U-factor of Construction Assemblies

The installer shall provide documentation from the manufacturer supporting the installed R-value. Some products have R-value markings, others do not. For site applied insulation (i.e., loose-fill glass fiber and mineral fiber, cellulose, and spray polyurethane foam insulation), the insulation shall be installed in co~~m~~nformance to the manufacturer's coverage chart, R-value chart, or similar performance data sheet.

Data presented in the tables is not inclusive of all materials or combinations of materials used in construction of residential and nonresidential buildings. Information presented for framed and nonframed assemblies provides a summary of the reference assembly components representing the R-value and U-factor necessary for determining prescriptive compliance with the Standards. This data is also used by approved compliance software to establish the required thermal efficiencies affecting energy use for the standard design building in performance compliance calculations.

R-value is used to describe insulation effectiveness, but R-value does not describe the overall performance of the complete assembly. Construction assemblies usually have more than one layer and each layer has its own conductance, or rate of heat transfer. The U-factor more fully describes the conductance of every component of the construction assembly.

The prescriptive compliance table values for framed and nonframed assemblies of wood and steel roof and ceilings, walls, and floors are developed from series and parallel path procedures of the American Society of Heating, Refrigerating and Air-Conditioning Engineers, Inc. (ASHRAE). Approved computer software uses more detailed calculations and must be used for all buildings using mass type construction. Prescriptive compliance can be demonstrated when the insulation's R-value is equal to or greater than the R-value required for the envelope feature in the climate zone which the building is permitted for construction; or has an overall U-factor equal to or less than the U-factor required for the envelope feature in the climate zone which the building is permitted for construction.

For example, the R-value and U-factor of components within assemblies of wood framing that are not represented in the tables can be calculated using the procedure shown below (i.e., substituting for different components). For example, R-values of different insulation types can be inserted into Table 4.1.1 and the assembly's overall R-value and U-factor can be determined. Each layer of the assembly is entered in sequence at a cross-section through its cavity, from outside to inside.

For more advanced assemblies, and for steel framed assemblies, within the California Building Code Compliance software (CBECC) for both residential and nonresidential buildings, the Energy Commission has developed an assembly calculator to automate ASHRAE procedures in order to help the building community in calculating R-values and U-factors of wood and metal framed

assemblies with a higher degree of accuracy and speed. The output forms of this program can be used as part of a residential or nonresidential building permit submittal.

Table 4.1.1 U-Factor Calculations for Wood Framed Assembly

	Assembly Type: Wall 2x4 16 in. o.c	**R-Value**	**R-Value**	
	Framing Material: Wood			
	Assembly Components	**Cavity (R_c)**	**Frame (R_f)**	
	Outside air film	0.17	0.17	
1	3/8 inch 2-coat stucco	0.08	0.08	
2	1 inch, R-4 EPS insulating sheathing	4.0	4.0	
3	Building paper (felt)	0.06	0.06	
4	R-15 insulation	15	--	
5	2x4 inch doug fir framing @ R-0.99 per inch	--	3.47	
6	0.50 inch gypsum board	0.45	0.45	
	Inside air film	0.68	0.68	
	Subtotal	**20.44**	**8.91**	
	1/Rc X (1–(Frame% / 100))]	+ [(1/Rf)	X (Frame% / 100)]	Assembly U-Factor
	[(1/20.44) X (1- (25/100))]	+ [(1/8.91)	X (25/100)]	**0.065**

[1/Rc x (1 – (Frame% / 100))] + [(1/Rf) x (Frame% / 100)] = Assembly U-Factor

Where: Frame percentage (%) determined by Table 4.1.6

JA4.1.2.2 Accounting for Continuous Insulation R-value

Many of the tables in this appendix have columns for varying levels of continuous insulation. Continuous insulation is insulation that is uninterrupted by framing and provides a continuous insulating layer. Limits on the position of the continuous insulation and other factors are specified in each table. When data from a table is used manually, the R-value of the continuous insulation in the proposed construction shall be equal to or greater than the R-value shown in the column heading; no interpolation is permitted. California Energy Commission approved software used for performance or prescriptive calculations may account for any amount of continuous insulation using Equation 4-1. This adjustment may not be used, however, for continuous insulation with thermal resistance less than R-2.

Equation 4-1

$$U_{With.Cont.Insul} = \frac{1}{\frac{1}{U_{Col.A}} + R_{Cont.Insul}}$$

Where:

$U_{With.Cont.Insul}$ Calculated U-factor of the construction assembly with a specific R-value of continuous insulation.

$U_{Col.A}$ A U-factor selected from column A.

$R_{Cont.Insul}$ The R-value of continuous insulation.

If insulation layers are added that are interrupted by furring strips, then the effective R-values from Table 4. 3.13 shall be used in Equation 4-1.

JA4.1.2.3 Accounting for Unusual Construction Layers

The assumptions that are the basis of the U-factors published in this appendix are documented in the paragraphs following each table. California Energy Commission approved software used for prescriptive or performance calculations may be used to make adjustments to these assumptions based on data entered by the software user. Adjustments may only be made, however, when the total R-value of the proposed construction is at least an R-2 greater than the documented assumption. Each table includes the assumptions used to determine the U-factors.

Equation 4-2 shall be used to make these adjustments.

Equation 4-2

$$U_{Proposed} = \frac{1}{\frac{1}{U_{With.Cont.Insul}} + \Delta R_{Assumed}}$$

Where:

$U_{Proposed}$ Calculated U-factor of the proposed construction assembly.

$U_{With.Cont.Insul}$ The U-factor adjusted for continuous insulation using Equation 4-1.

$\Delta R_{Assumed}$ The difference in R-value between what was assumed in the table and the proposed construction for a continuous layer.

There are limits, however, on the types of adjustments that can be made.

(a) The difference in resistance shall be at least R-2. When calculating the difference in R-value, no changes in assumptions shall be made to the framing/insulation layer; the proposed construction shall assume the same values as the table.

(b) The thermal resistance of air layers shall be taken from the 2009 ASHRAE Handbook of Fundamentals, for a mean temperature of 50°F, a temperature difference of 20 °F and an effective emittance of 0.82.

(c) R-values for air layers for roof and ceiling assemblies shall be based on heat flow up. R-values for air layers for floor assemblies shall be based on heat flow down. R-values for other assemblies shall be based on horizontal heat flow. Air layers must be sealed on edges to prevent air layer mixing with ambient air.

(d) One additional air gap may be credited, but not air gaps that are within the framing insulation cavity layer; these are already accounted for in the published data. Air gaps of less than 0.5 inch thickness shall be considered to have an R-value of zero. An example of an acceptable additional air gap would be the space between a brick veneer and the sheathing on the framed wall.

JA4.1.2.4 Double Walls

The U-factor of double walls or other double assemblies may be determined by combining the U-factors from the individual construction assemblies that make up the double wall. The following equation shall be used.

Equation 4-3

$$U_{Combined} = \frac{1}{\frac{1}{U_1} + \frac{1}{U_2}}$$

JA4.1.3 Tapered Insulation

If continuous roof insulation is tapered for drainage or other purposes, then the user may determine the overall U-factor in one of two ways:

(a) To determine the U-factor for the roof at the location where the insulation is at a minimum and where it is at a maximum. Take the average of these two U-factors. With the R-value compliance approach (prescriptive method only), calculate the R-value as the inverse of the average U-factor as determined above. R-values may not be averaged.

(b) Divide the roof into sub-areas for each one-inch increment of insulation and determine the U-factor of each sub-area. This approach may only be used with the performance method, and in this case, each sub area shall be modeled as a separate surface.

When roofs have a drain located near the center and when tapered insulation creates a slope to the drain, the surface area at the maximum insulation thickness will be significantly greater than the surface area at the minimum thickness, so the second method will give a more accurate result. The first method yields a conservative estimate for roofs with central drains.

JA4.1.4 Insulating Layers on Mass and Other Walls

The data in Table 4.3.14 may be used to modify the U-factors and C-factors from Table 4.3.5, Table 4.3.6, and Table 4.3.7 when an additional layer is added to the inside or outside of the mass wall. For exterior insulation finish systems (EIFS) or other insulation only systems, values should be selected from row 26 of Table 4.3.14 In these cases, the R-value of the layer is equal to the R-value of the insulation. The other choices from this table represent systems typically placed on the inside of mass walls. The following equations calculate the total U-factor or C-factor, where U_{mass} and C_{mass} are selected from Table 4.3.5, Table 4.3.6, or Table 4.3.7 and $R_{Outside}$ and R_{Inside} are selected from Table 4.3.14. $R_{outside}$ is selected from row 26 while R_{inside} is selected from rows 1 through 25.

$$U_{Total} = \frac{1}{R_{Outside} + \frac{1}{U_{Mass}} + R_{Inside}}$$

Equation 4-4

$$C_{Total} = \frac{1}{R_{Outside} + \frac{1}{C_{Mass}} + R_{Inside}}$$

Equation 4-5

The values from Table 4.3.14 may be used to modify the U-factors of other construction assemblies as well, when non-homogeneous layers are added (see Equation 4-1).

JA4.1.5 Wood Based Sheathing R-values

For the purpose of calculations for the Joint Appendices plywood, particle board, oriented strand board (OSB) and similar sheathing materials will all be considered Wood Based Sheathing. A single R-value will be used for each thickness listed regardless of the material. This approach simplifies calculations yet has little effect on the overall R-value of assemblies since the differences in sheathing R-value are minimal compared to the overall assembly.

R-values for Wood Based Sheathing

Thickness	R-value (ft^2-hr ^oF/Btu)
3/8 inch	0.36
1/2 inch	0.48
5/8 inch	0.60
3/4 inch	0.72
1 inch	0.96
1 1/4 inch	1.20

JA4.1.6 Framing Percentages for Calculating U-factors

The thermal resistance of framed assemblies is dependent on the assembly's total R-value, and the quality of construction to limit air intrusion within the assembly that can rob the insulation of its effectiveness. A given assembly type is made of several individual layers and components, each having specific resistance values. However, the assembly's R-value and overall U-factor is primarily affected by: (1) the R-value of insulation installed within the cavity, (2) the R-value of continuous insulating sheathing added to the interior or exterior face of the framing, and, (3) the amount of framing that interrupts the plane of insulation separating conditioned from unconditioned space. All framed assemblies shall include the framing percentages indicated in Table 4.1.6.

Advanced wall systems (AWS) reduce the amount of material required for wall framing which increases the insulation within the cavity by:

(a) Use of 24" oc framing

(b) Eliminating intermediate framing for cripple and king studs

(c) Use of single top plates

(d) Use of double stud corners

(e) Use of in-line (i.e., stack) framing to maintain continuity of transferring live loads of roof framing to wall framing, allowing roof sheathing and exterior siding to be installed at full widths

(f) Reducing framing for connections at interior partition walls (i.e., T-walls)

(g) Reducing window and door header size

Table 4.1.6 – Framing Percentages

Assembly Type	Framing Spacing	Framing Percentage
Walls	16"o.c.	25 %
	24"o.c.	22 %
AWS	48"o.c.	4 %
	24" o.c.	17%
Walls Metal	16"o.c.	15%
	24"o.c.	12%
Floors	16"o.c.	10 %
	24"o.c.	7 %
Roofs	16"o.c.	10 %
	24"o.c.	7 %
	48"o.c.	4 %

JA4.1.7 R-values and U-factors for Medium-Density Closed Cell and Low-Density Open Cell Spray Polyurethane Foam (SPF) Insulation:

These procedures apply to two types of SPF used as building insulation: medium-density closed cell SPF (ccSPF) and low-density open cell SPF (ocSPF).

(a) ccSPF: A spray applied polyurethane foam insulation having a closed cellular structure resulting in an installed nominal density of 1.5 to less than 2.5 pounds per cubic foot (pcf).

R-value: The total R-value shall be calculated based on the nominal required thickness of the insulation multiplied by an R-value of 5.8 per inch. The R-value of ccSPF insulation shall meet or exceed the installed thickness specified in Table 4.1.7.

Alternatively, the total R-value may be calculated based on the thickness of insulation multiplied by the "tested R-value per inch" as certified by Department of Consumer Affairs, Bureau of Household Goods and Services. Supporting documentation showing the certified R-value per inch shall be made available at the site for verification and noted on the Certificate of Installation. Based on this calculation, the overall assembly U-factor shall be determined by selecting the assembly that matches the assembly type, framing configuration, and cavity insulation from the appropriate Reference Joint Appendix JA4 table or other approved method specified in Section JA4 of the Reference Appendices.

The R-value of the installed insulation shall be based on the verified thickness at an R-value of 5.8 per inch unless supporting documentation is provided that verifies use of other values. Approved compliance software shall make appropriate adjustments to account for the R-value and U-factor effects of the ccSPF assembly.

Nominal Thickness: ccSPF sprayed into framed cavities or on flat surfaces will expand with variable thicknesses, visibly appearing as undulations on the surface of the insulation. The average thickness of the foam insulation must meet or exceed the required R-value. Depressions in the foam insulation's surface shall not be greater than 1/2-inch of the required thickness at any given point of the surface area being insulated.

Filling of Framed Assemblies: ccSPF insulation is not required to fill the cavities of framed assemblies provided the installed thickness of insulation conforms to compliance documentation and that the bottom and top plates of vertical framing and both ends of horizontal framing, including band and rim joists, are sprayed to completely fill the cavity adjacent to and in contact with the framing to a distance of 2.0 inches away from the framing for ocSPF insulation, or filled to the thickness meeting ASTM testing as an air barrier.

Air Barrier: ccSPF installed as an air barrier shall be a minimum of 2.0 inches in thickness; alternatively, ccSPF insulation shall be installed at a thickness that meets an air permeance no greater than 0.02 L/s-m^2 at 75 Pa pressure differential when tested in accordance to ASTM E2178 or ASTM E283.

(b) ocSPF: A spray applied polyurethane foam insulation having an open cellular structure resulting in an installed nominal density of 0.4 to less than 1.5 pounds per cubic foot (pcf).

R-value: The total R-value shall be calculated based on the nominal required thickness of the insulation multiplied by an R-value of 3.6 per inch. The R-value of ocSPF insulation shall meet or exceed the installed thickness specified in Table 4.1.7.

Alternatively, the total R-value may be calculated based on the thickness of insulation multiplied by the "tested R-value per inch" as certified by Department of Consumer Affairs, Bureau of Household Goods and Services. Supporting documentation showing the certified R-value per inch shall be made available at the site for verification and noted on the Certificate of Installation. Based on this calculation, the overall assembly U-factor shall be determined by selecting the assembly that matches the assembly type, framing configuration, and cavity insulation from the appropriate Reference Joint Appendix JA4 table or other approved method specified in Section JA4 of the Reference Appendices.

The R-value of the installed insulation shall be based on the verified thickness at an R-value of 3.6 per inch unless supporting documentation is provided that verifies use of other values. Approved compliance software shall make appropriate adjustments to account for the R-value and U-factor effects of the ocSPF assembly.

Nominal Thickness: ocSPF sprayed into framed cavities or on flat surfaces will expand with variable thicknesses, visibly appearing as undulations on the surface of the insulation. The average thickness of the foam insulation must meet or exceed the required R-value. Depressions in the foam insulation surface shall not be greater than 1-inch of the required thickness provided these depressions do not exceed 10% of the surface area being insulated.

Filling of Framed Assemblies: ocSPF insulation shall completely fill cavities of 2x4 inch framing or less. Cavities greater than 2x4 inch framing dimensions may be filled to the thickness that meets the required R-value used for compliance provided that the bottom and top plates of vertical framing and both ends of horizontal framing, including band and rim joists, are sprayed to completely fill the cavity adjacent to and in contact with the framing to a distance of 5.5 inches away from the framing for ocSPF insulation, or filled to the thickness meeting ASTM testing as an air barrier.

Air Barrier: ocSPF installed as an air barrier shall be a minimum of 5.5 inches in thickness; alternatively, ocSPF insulation shall be installed at a thickness that meets an air permeance no

greater than 0.02 L/s-m^2 at 75 Pa pressure differential when tested in accordance to ASTM E2178 or ASTM E283.

Table 4.1.7: Required Thickness of SPF Insulation (inches) to Achieve Specified R-values

Equivalent R-Values for SPF insulation	**11**	**13**	**15**	**19**	**21**	**22**	**25**	**30**	**38**
Required thickness of ccSPF Insulation @ R5.8/inch	2.00	2.25	2.75	3.50	3.75	4.00	4.50	5.25	6.75
Required thickness of ocSPF insulation @ R3.6/inch	3.0	3.5	4.2	5.3	5.8	6.1	6.9	8.3	10.6

NOTE:
A HERS rater shall verify the installation of SPF insulation using the procedures specified in RA3.5.~~5~~6 whenever R-values other than the default R-value per inch listed in Table 4.1.7 are used for compliance (see *"Thermal Specifications"* in sections RA3.5.6.1).

JA4.2 Roofs and Ceilings

Table 4.2.1 – U-factors of Wood Framed Attic Roofs

			Rated R-value of Continuous Insulation[1]							
			None	R-2	R-4	R-6	R-7	R-8	R-10	R-14
Truss Spacing	**R-value of Attic Insulation**		**A**	**B**	**C**	**D**	**E**	**F**	**G**	**H**
16 in. OC	None	**1**	0.300	0.187	0.136	0.107	0.097	0.088	0.075	0.058
	R-11	**2**	0.079	0.068	0.060	0.053	0.051	0.048	0.044	0.037
	R-13	**3**	0.071	0.062	0.055	0.050	0.047	0.045	0.041	0.036
	R-19	**4**	0.049	0.045	0.041	0.038	0.037	0.035	0.033	0.029
	R-21	**5**	0.042	0.039	0.036	0.034	0.032	0.031	0.030	0.026
	R-22	**6**	0.043	0.039	0.037	0.034	0.033	0.032	0.030	0.027
	R-25	**7**	0.038	0.035	0.033	0.031	0.030	0.029	0.028	0.025
	R-30	**8**	0.032	0.030	0.028	0.027	0.026	0.025	0.024	0.022
	R-38	**9**	0.026	0.024	0.023	0.022	0.022	0.021	0.020	0.019
	R-44	**10**	0.021	0.020	0.019	0.019	0.018	0.018	0.017	0.016
	R-49	**11**	0.020	0.019	0.019	0.018	0.018	0.017	0.017	0.016
	R-60	**12**	0.017	0.016	0.016	0.015	0.015	0.015	0.014	0.013
24 in. OC	None	**13**	0.305	0.189	0.137	0.108	0.097	0.089	0.075	0.058
	R-11	**14**	0.076	0.066	0.058	0.052	0.050	0.047	0.043	0.037
	R-13	**15**	0.068	0.060	0.054	0.048	0.046	0.044	0.041	0.035
	R-19	**16**	0.048	0.043	0.040	0.037	0.036	0.034	0.032	0.029
	R-21	**17**	0.043	0.040	0.037	0.034	0.033	0.032	0.030	0.027
	R-22	**18**	0.041	0.038	0.036	0.033	0.032	0.031	0.029	0.026
	R-25	**19**	0.037	0.034	0.032	0.030	0.029	0.028	0.027	0.024
	R-30	**20**	0.031	0.029	0.028	0.026	0.025	0.025	0.024	0.022
	R-38	**21**	0.025	0.024	0.023	0.022	0.021	0.021	0.020	0.018
	R-44	**22**	0.021	0.020	0.019	0.019	0.018	0.018	0.017	0.016
	R-49	**23**	0.019	0.019	0.018	0.017	0.017	0.017	0.016	0.015
	R-60	**24**	0.016	0.016	0.015	0.015	0.014	0.014	0.014	0.013

Notes:

1. Continuous insulation shall be located at the ceiling, below the bottom chord of the truss and be uninterrupted by framing.

2. In climate zones 1 and 16 the insulating R-value of continuous insulation materials installed above the roofs waterproof membrane shall be multiplied by 0.8 before choosing the table column for determining assembly U-factor.

This table contains thermal performance data (U-factors) for wood framed attics where the ceiling provides the air barrier and the attic is ventilated. Wood trusses are the most common construction for low-rise residential buildings and for Type V nonresidential buildings. While the sketch shows a truss system with a flat ceiling, the data in this table may be used for scissor trusses and other non-flat trusses. If the bottom chord is not flat, then the slope should not exceed 4:12 for nonadhesive binder blown insulation. This table may also be used with composite trusses that have a wood top and bottom chord and metal struts connecting them.

For the majority of cases, values will be selected from column A of this table. Column A shall be used for the common situation where either batt or blown insulation is placed directly over the ceiling (and tapered at the edges). Builders or designers may increase thermal performance by

adding a continuous insulation layer at the ceiling. The continuous insulation is typically a rigid polystyrene or polyisocyanurate foam insulation. Continuous insulation does not include the blown or batt insulation that is over the bottom chord of the truss (this is already accounted for in the U-factors published in Column A).

When this table is used manually, the R-value of continuous insulation shall be equal to or greater than the R-value published in the continuous insulation columns. For instance if the insulation is R-3, the R-2 column shall be used. No interpolation is permitted when data from the table is selected manually. CEC approved compliance software, including those used for prescriptive compliance, may accurately account for any amount of continuous insulation or for unusual construction assemblies using Equation 4-1 and Equation 4-2.

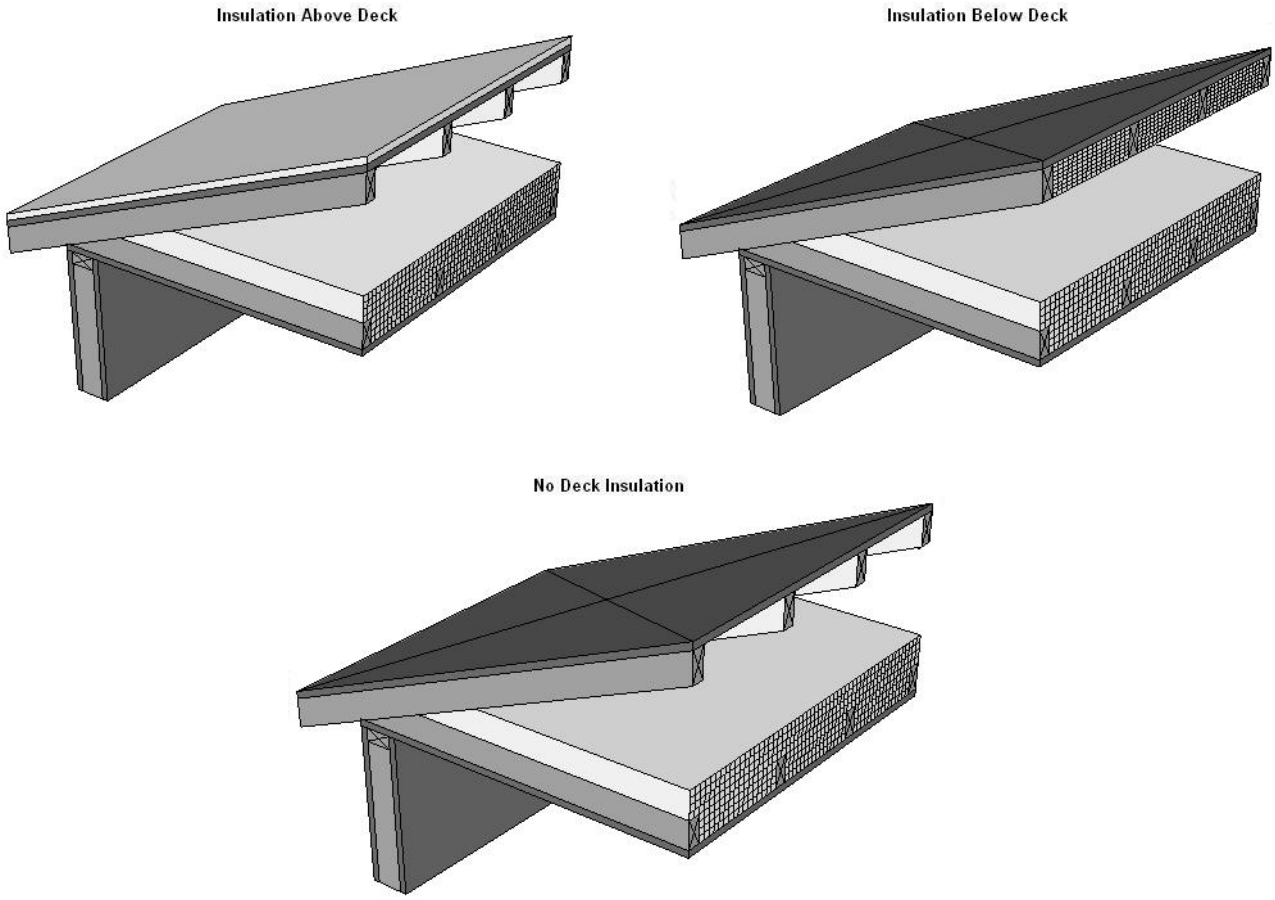

Figure 4.2.1 – Wood Framed Attic Roofs

This table shall not be used for cases where insulation is located at the roof of the attic. There are several situations in which this may be done. For example, in a sealed attic, foamed plastic may be sprayed onto the top chord of the trusses and onto the bottom of the upper structural deck (roof). The foam expands and cures with the intent of providing an airtight barrier and continuous insulation. Another case is where a plastic membrane or netting is installed above the ceiling (hanging below the roof deck) either in a ventilated or sealed (not ventilated) attic, and

then either batt or blown insulation is installed over the netting. Since there are a number of issues related to these insulation techniques, special CEC approval is required.

Assumptions: This data is calculated using the parallel path method documented in the 2009 ASHRAE Handbook of Fundamentals. These calculations assume an exterior air film of R-0.17, asphalt shingles of R-0.44 (AR02), building paper of R-0.06 (BP01), ½ inch of wood based sheathing (Custom), an attic air space (greater than 3.5 inch) with a R-0.80, the insulation / framing layer, continuous insulation (if any) ½ inch gypsum board (GP01) of R-0.45, and an interior air film (heat flow up) of R-0.61. Wood 2x4 framing is assumed at the ceiling level. R-13 of attic insulation is assumed between the framing members; above that level, attic insulation is uninterrupted by framing. The framing percentage is assumed to be 10 percent for 16 inch on center and 7 percent for 24 inch on center. 7.25 percent of the attic insulation above the framing members is assumed to be at half depth, due to decreased depth of insulation at the eaves.

Table 4.2.2 – U-factors of Wood Framed Rafter Roofs

				Rated R-value of Continuous Insulation[5]										
				None	R-2	R-4	R-6	R-7	R-8	R-10	R-14	R-17	R-20	R-23
Rafter Spacing	**R-value of Cavity Insulation**	**Nominal Framing Size**		**A**	**B**	**C**	**D**	**E**	**F**	**G**	**H**	**I**	**J**	**K**
16 in. OC	None	Any	**1**	0.297	0.186	0.136	0.107	0.096	0.088	0.075	0.058	0.049	0.043	0.038
	R-11[2]	2x4	**2**	0.084	0.072	0.063	0.056	0.053	0.050	0.046	0.039	0.035	0.031	0.029
	R-13[2]	2x4	**3**	0.075	0.065	0.058	0.052	0.049	0.047	0.043	0.037	0.033	0.030	0.028
	R-15[2]	2x4	**4**	0.068	0.060	0.053	0.048	0.046	0.044	0.040	0.035	0.032	0.029	0.027
	R-19[2]	2x4	**5**	0.075	0.065	0.058	0.052	0.049	0.047	0.043	0.037	0.033	0.030	0.028
	R-19[2,3]	2x4	**6**	0.062	0.055	0.050	0.045	0.043	0.041	0.038	0.033	0.030	0.028	0.026
	R-11	2x6	**7**	0.076	0.066	0.058	0.052	0.050	0.047	0.043	0.037	0.033	0.030	0.028
	R-13	2x6	**8**	0.069	0.061	0.054	0.049	0.047	0.044	0.041	0.035	0.032	0.029	0.027
	R-15	2x6	**9**	0.062	0.055	0.050	0.045	0.043	0.041	0.038	0.033	0.030	0.028	0.026
	R-19[2]	2x6	**10**	0.056	0.050	0.046	0.042	0.040	0.039	0.036	0.031	0.029	0.026	0.024
	R-21[2]	2x6	**11**	0.052	0.047	0.043	0.040	0.038	0.037	0.034	0.030	0.028	0.025	0.024
	R-19[2]	2x8	**12**	0.051	0.046	0.042	0.039	0.038	0.036	0.034	0.030	0.027	0.025	0.023
	R-21	2x8	**13**	0.048	0.044	0.040	0.037	0.036	0.035	0.032	0.029	0.026	0.024	0.023
	R-22	2x10	**14**	0.044	0.040	0.037	0.035	0.034	0.033	0.031	0.027	0.025	0.023	0.022
	R-25	2x10	**15**	0.041	0.038	0.035	0.033	0.032	0.031	0.029	0.026	0.024	0.023	0.021
	R-30[4]	2x10	**16**	0.036	0.034	0.031	0.030	0.029	0.028	0.026	0.024	0.022	0.021	0.020
	R-30	2x12	**17**	0.035	0.033	0.031	0.029	0.028	0.027	0.026	0.023	0.022	0.021	0.019
	R-38[4]	2x12	**18**	0.029	0.027	0.026	0.025	0.024	0.024	0.022	0.021	0.019	0.018	0.017
	R-38[4]	2x14	**19**	0.028	0.027	0.025	0.024	0.023	0.023	0.022	0.020	0.019	0.018	0.017
24 in. OC	None	Any	**25**	0.237	0.161	0.122	0.098	0.089	0.082	0.070	0.055	0.047	0.041	0.037
	R-11[2]	2x4	**26**	0.081	0.070	0.061	0.055	0.052	0.049	0.045	0.038	0.034	0.031	0.028
	R-13[2]	2x4	**27**	0.072	0.063	0.056	0.050	0.048	0.046	0.042	0.036	0.032	0.030	0.027
	R-15[2]	2x4	**28**	0.065	0.058	0.052	0.047	0.045	0.043	0.039	0.034	0.031	0.028	0.026
	R-19[2]	2x4	**29**	0.072	0.063	0.056	0.050	0.048	0.046	0.042	0.036	0.032	0.030	0.027
	R-19[2,3]	2x4	**30**	0.059	0.053	0.048	0.044	0.042	0.040	0.037	0.032	0.029	0.027	0.025
	R-11	2x6	**31**	0.075	0.065	0.058	0.052	0.049	0.047	0.043	0.037	0.033	0.030	0.028
	R-13	2x6	**32**	0.067	0.059	0.053	0.048	0.046	0.044	0.040	0.035	0.031	0.029	0.026
	R-15[2]	2x6	**33**	0.060	0.054	0.048	0.044	0.042	0.041	0.038	0.033	0.030	0.027	0.025
	R-19[2]	2x6	**34**	0.054	0.049	0.044	0.041	0.039	0.038	0.035	0.031	0.028	0.026	0.024
	R-21[2]	2x6	**35**	0.049	0.045	0.041	0.038	0.036	0.035	0.033	0.029	0.027	0.025	0.023
	R-19[2]	2x8	**36**	0.049	0.045	0.041	0.038	0.036	0.035	0.033	0.029	0.027	0.025	0.023
	R-21	2x8	**37**	0.046	0.042	0.039	0.036	0.035	0.034	0.032	0.028	0.026	0.024	0.022
	R-22	2x10	**38**	0.043	0.040	0.037	0.034	0.033	0.032	0.030	0.027	0.025	0.023	0.022
	R-25	2x10	**39**	0.039	0.036	0.034	0.032	0.031	0.030	0.028	0.025	0.023	0.022	0.021
	R-30[4]	2x10	**40**	0.034	0.032	0.030	0.028	0.027	0.027	0.025	0.023	0.022	0.020	0.019
	R-30	2x12	**41**	0.033	0.031	0.029	0.028	0.027	0.026	0.025	0.023	0.021	0.020	0.019
	R-38 [4]	2x12	**42**	0.028	0.027	0.025	0.024	0.023	0.023	0.022	0.020	0.019	0.018	0.017
	R-38[4]	2x14	**43**	0.027	0.026	0.024	0.023	0.023	0.022	0.021	0.020	0.019	0.018	0.017

Notes:

1. Rigid foam board used for cavity insulation must fill the entire cavity between the rafters and be sealed properly to prevent air gaps, and must be secured properly to prevent any future discrepancies in the construction assembly.

2. This assembly is only allowed where ventilation is provided between the bottom of the roof deck and the top of the insulation meeting CBC requirements or with enforcement agency official's approval of rafter attic assemblies with no ventilation air spaces.

3. This assembly requires insulation with an R-value per inch 5.6 or larger (k-factor 1.8 or less). This is board type insulation, mostly Isocyanurate. Medium density spray polyurethane foam may also be used to meet this requirement if the quality installation procedures and documentation in Reference Joint Appendix JA7 are followed, Documentation from Directory of Certified insulation materials must be provided to show compliance with this assembly.

4. Higher density fiberglass batt is needed to achieve the indicated U-factor. R-30 must be achieved with less than 8.25 inch full thickness. R-38 must be achieved with less than 10.25 inch thickness (R-30c, R-38c).

5. Continuous insulation shall be located at the ceiling or at the roof and be uninterrupted by framing. In climate zones 1 and 16 the insulating R-value of continuous insulation materials installed above the roofs waterproof membrane shall be multiplied by 0.8 before choosing the table column for determining assembly U-factor.

This table contains thermal performance data (U-factors) for wood framed rafter roofs. This is a common construction in residential buildings and in Type V nonresidential buildings. The rafters may be either flat or in a sloped application. Insulation is typically installed between the rafters. With this construction, the insulation is in contact with the ceiling and there is typically a one-inch air gap above the insulation so that moisture can be vented. Whether there is an air space above the insulation depends on local climate conditions and may not be required in some building permit jurisdictions. Filling the entire cavity of framed rafter assemblies with loose-fill mineral fiber and wool, cellulose, or ocSPF requires prior approval by the local building official.

For the majority of cases, U-factors will be selected from Column A of this table; this case covers insulation placed only in the cavity. When continuous insulation is installed either at the ceiling or at the roof, then U-factors from other columns may be selected. The continuous insulation is typically a rigid polystyrene or polyisocyanurate foam insulation, but can also include mineral wool or other suitable materials.

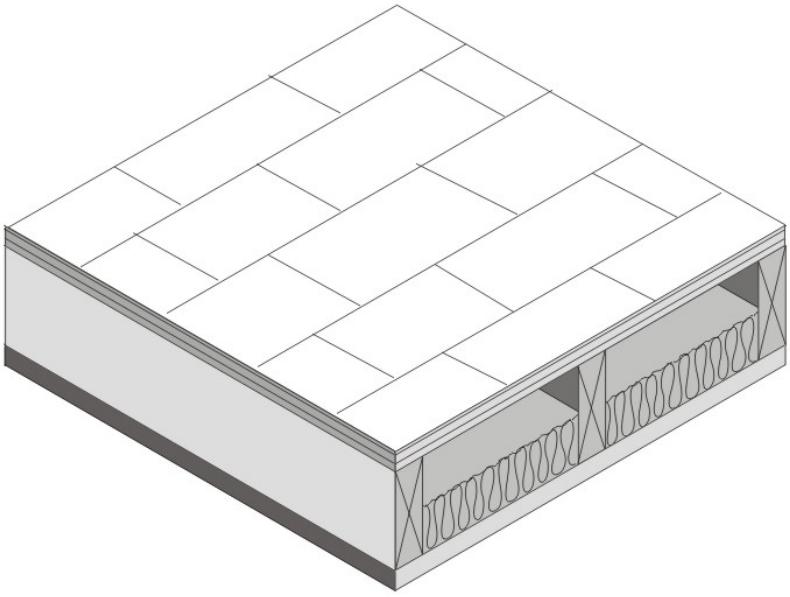

Figure 4.2.2 – Wood Frame Rafter Roof

When this table is used manually, the R-value of continuous insulation shall be equal to or greater than the R-value published in the continuous insulation columns. For instance, if the continuous insulation is R-3, the R-2 column shall be used. No interpolation is permitted when data from the table is used manually. CEC approved software, however, may determine the U-factor for any amount of continuous insulation and/or for layers using Equation 4-1 and Equation 4-2.

Assumptions: These data are calculated using the parallel path method documented in the 2009 ASHRAE Handbook of Fundamentals. These calculations assume an exterior air film of R-0.17, asphalt shingles of R-0.44 (AR02), building paper of R-0.06 (BP01), ½ inch of wood based sheathing (Custom), continuous insulation (optional), the insulation / framing layer with an air space of R-0.76 or R-0.80 (except for loose-fill mineral fiber and wool, cellulose, ccSPF, and ocSPF), 1/2 inch gypsum of R-0.45 (GP01), and an interior air film (heat flow up diagonally) of R-0.62. The continuous insulation may also be located at the ceiling, between the drywall and the framing. The framing percentage is assumed to be 10 percent for 16 inch OC and 7 percent for 24 inch. OC. The thickness of framing members is assumed to be the actual size of 3.50, 5.50, 7.25, 9.25, and 11.25 inches for 2x4, 2x6, 2x8, 2x10, and 2x12 nominal sizes. High-density batt insulation is assumed to be 8.5 inch thick for R-30 and 10.5 inch thick for R-38. The R-value of sprayed foam and cellulose insulation is assumed to be R-3.6 per inch.

Table 4.2.3 – U-factors of Structurally Insulated Panels (SIPS) Roof/Ceilings

Wood Framing Connection Type (spline)	***Insulation Core R-value[1]***	***Typical Panel Thickness***		***Rated R-value of Continuous Insulation [4,5]***					
				None A	**R-2 B**	**R-4 C**	**R-5 D**	**R-7 E**	**R-8 F**
OSB	R-22	6.5 in	**1**	0.041	0.038	0.035	0.034	0.032	0.031
Single 2x	R-22	6.5 in	**2**	0.044	0.040	0.037	0.036	0.033	0.032
Double 2x	R-22	6.5 in	**3**	0.046	0.042	0.038	0.037	0.034	0.033
I-joist	R-22	6.5 in	**4**	0.043	0.039	0.036	0.035	0.033	0.032
OSB	R-28	8.25 in	**5**	0.033	0.031	0.029	0.028	0.027	0.026
Single 2x	R-28	8.25 in	**6**	0.034	0.032	0.030	0.029	0.027	0.027
Double 2x	R-28	8.25 in	**7**	0.037	0.034	0.031	0.030	0.028	0.028
I-joist	R-28	8.25 in	**8**	0.033	0.310	0.029	0.028	0.027	0.026
OSB	R-33[2]	6.5 in	**9**	0.030	0.027	0.026	0.025	0.024	0.023
Single 2x	R-33[2]	6.5 in	**10**	0.031	0.029	0.027	0.026	0.025	0.024
Double 2x	R-33[2]	6.5 in	**11**	0.034	0.031	0.029	0.028	0.026	0.025
I-joist	R-33[2]	6.5 in	**12**	0.031	0.028	0.027	0.026	0.025	0.024
OSB	R-36	10.25 in	**13**	0.026	0.025	0.024	0.023	0.022	0.022
Single 2x	R-36	10.25 in	**14**	0.028	0.026	0.025	0.024	0.023	0.022
Double 2x	R-36	10.25 in	**15**	0.029	0.028	0.026	0.025	0.024	0.023
I-joist	R-36	10.25 in	**16**	0.027	0.025	0.024	0.023	0.022	0.022
OSB	R-44	12.25 in	**17**	0.021	0.020	0.019	0.019	0.018	0.018
Single 2x	R-44	12.25 in	**18**	0.023	0.022	0.021	0.021	0.020	0.019
Double 2x	R-44	12.25 in	**19**	0.025	0.023	0.022	0.022	0.021	0.020
I-joist	R-44	12.25 in	**20**	0.022	0.021	0.020	0.020	0.019	0.019
OSB	R-55[3]	10.25 in	**21**	0.017	0.016	0.016	0.016	0.016	0.016
Single 2x	R-55[3]	10.25 in	**22**	0.019	0.018	0.018	0.018	0.017	0.016
Double 2x	R-55[3]	10.25 in	**23**	0.021	0.020	0.019	0.019	0.018	0.017
I-joist	R-55[3]	10.25 in	**24**	0.018	0.017	0.017	0.017	0.016	0.016
Steel Framing	R-14	48 in	**25**	0.075	0.065	0.058	0.055	0.049	0.047
Steel Framing	R-22	48 in	**26**	0.057	0.051	0.046	0.044	0.041	0.039
Steel Framing	R-28	48 in	**27**	0.047	0.043	0.040	0.039	0.035	0.034
Steel Framing	R-36	48 in	**28**	0.043	0.040	0.037	0.036	0.033	0.032

NOTES:

1. The insulation R-value must be at least R-21.7 in order to use this table. This table assumes moulded expanded polystyrene (EPS) unless noted otherwise. Although other insulation types are used by some SIP manufacturers, such as polyurethane and extruded expanded insulation (XPS), EPS is the most common insulation used in SIP construction.
2. R-33.2 is achievable using polyurethane insulation in 6.5" panels.
3. R-55.3 is achievable using polyurethane insulation in 10.25" panels.
4. Continuous insulation shall be at least R-2 and may be installed on either the inside or the exterior of the roof/ceiling.
5. In climate zones 1 and 16 the insulating R-value of continuous insulation materials installed above the roof waterproof membrane shall be multiplied times 0.8 before choosing the table column for determining assembly U-factor.

Structural insulated panels (SIPs) consist of a rigid insulation core, securely bonded between two structural facings, to form a structural sandwich panel. SIPs are considered a non-framed assembly usually with little or no structural framing that penetrates the insulation layer, resulting in less thermal bridging across the insulation when compared to a conventional framed assembly.

This table gives U-factors for structurally insulated panels used in ceiling and roof constructions. Data is provided for three variations of this system. The system labeled “Wood Framing” uses wood spacers to separate the plywood or OSB boards and provide a means to connect the panels with mechanical fasteners. The system labeled “Steel Framing” uses steel framing members and mechanical fasteners at the joints. The system labeled “OSB Spline” uses splines to connect the panels so that framing members do not penetrate the insulation.

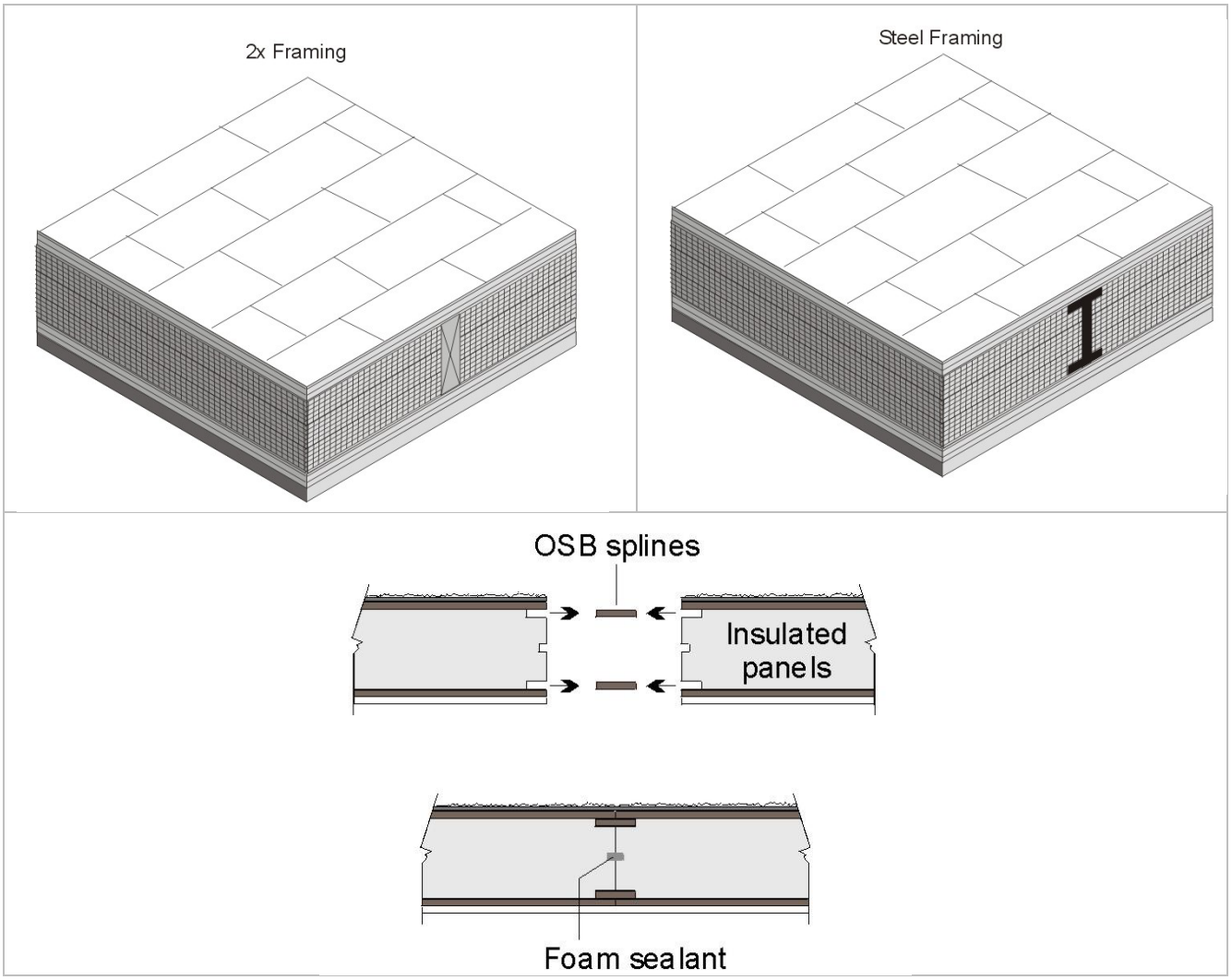

Figure 4.2.3 – SIPS Roof/Ceiling

Data from Column A will be used in most cases, since it is quite unusual to add continuous insulation to a panel that is basically all insulation anyway. If insulation is added, however, then the U-factor is selected from one of the other columns. If the tables are used manually, then the installed insulation shall have a thermal resistance at least as great as the column selected. When the table is used with CEC approved compliance software, then the R-value of any amount of continuous insulation may be accounted for along with the thermal resistance of special construction layers may be accounted for using Equation 4-1 and Equation 4-2.

Assumptions: The wood framing and OSB spline data are calculated using the parallel path method documented in the 2009 ASHRAE Handbook of Fundamentals. Assemblies with metal

framing are calculated using the ASHRAE Zone Calculation Method which is also documented in the 2005 ASHRAE Handbook of Fundamentals. These calculations assume an exterior air film of R-0.17, asphalt shingles of R-0.44 (AR02), building paper of R-0.06 (BP01), 7/16 inch of OSB of R-0.69, the rigid insulation of R-3.85 per inch, another layer of 7/16 inch of OSB, ½ inch gypsum board of R-0.45 (GP01), an R-value of 0.99 per inch is assumed for the wood frame and an interior air film (heat flow up diagonally) of R-0.62. If an additional layer of insulation is used, this may be installed on either the interior or exterior of the SIPS panel assembly

Table 4.2.4 – U-factors of Metal Framed Attic Roofs

Spacing	Nominal Framing Size	Cavity Insulation R-Value:		Rated R-value of Continuous Insulation[1]							
				R-0	R-2	R-4	R-6	R-7	R-8	R-10	R-14
				A	B	C	D	E	F	G	H
16 in. OC	Any	None	**1**	0.328	0.198	0.142	0.111	0.100	0.091	0.077	0.059
	2 x 4	R-11	**2**	0.126	0.101	0.084	0.072	0.067	0.063	0.056	0.046
	(3.65 in.)	R-13	**3**	0.121	0.097	0.082	0.070	0.066	0.061	0.055	0.045
		R-19	**4**	0.071	0.062	0.055	0.050	0.047	0.045	0.042	0.036
		R-21	**5**	0.063	0.056	0.050	0046	0.044	0.042	0.039	0.033
		R-22	**6**	0.059	0.053	0.048	0.044	0.042	0.040	0.037	0.032
		R-25	**7**	0.051	0.046	0.042	0.039	0.038	0.036	0.034	0.030
		R-30	**8**	0.041	0.038	0.035	0.033	0.032	0.031	0.029	0.026
		R-38	**9**	0.031	0.029	0.028	0.026	0.025	0.025	0.024	0.022
		R-44	**10**	0.027	0.026	0.024	0.023	0.023	0.022	0.021	0.020
		R-49	**11**	0.024	0.023	0.022	0.021	0.021	0.020	0.019	0.018
		R-60	**12**	0.019	0.018	0.018	0.017	0.017	0.016	0.016	0.015
24 in. OC	Any	None	**13**	0.324	0.197	0.141	0.110	0.099	0.090	0.076	0.059
	2 x 4	R-11	**14**	0.109	0.089	0.076	0.066	0.062	0.058	0.052	0.043
	(3.65 in.)	R-13	**15**	0.103	0.085	0.073	0.064	0.060	0.056	0.051	0.042
		R-19	**16**	0.065	0.058	0.052	0.047	0.045	0.043	0.039	0.034
		R-21	**17**	0.058	0.052	0.047	0.043	0.041	0.040	0.037	0.032
		R-22	**18**	0.055	0.050	0.045	0.041	0.040	0.038	0.035	0.031
		R-25	**19**	0.047	0.043	0.040	0.037	0.035	0.034	0.032	0.028
		R-30	**20**	0.039	0.036	0.034	0.032	0.031	0.030	0.028	0.025
		R-38	**21**	0.030	0.028	0.027	0.025	0.025	0.024	0.023	0.021
		R-44	**22**	0.026	0.025	0.024	0.022	0.022	0.022	0.021	0.019
		R-49	**23**	0.023	0.022	0.021	0.020	0.020	0.019	0.019	0.017
		R-60	**24**	0.019	0.018	0.018	0.017	0.017	0.016	0.016	0.015

Notes:

1 Continuous insulation shall be located at the ceiling or at the roof and be uninterrupted by framing.

2. In climate zones 1 and 16 the insulating R-value of continuous insulation materials installed above the roofs waterproof membrane shall be multiplied by 0.8 before choosing the table column for determining assembly U-factor.

This table contains U-factors for metal-framed attic roofs, where the ceiling is the air barrier and the attic is ventilated. This construction assembly is similar to those that are covered by Table 4.2.1, except that metal framing members are substituted for the wood-framing members. The top chord of the truss is typically sloped, while the bottom chord is typically flat. Data from this table may be used for cases where the bottom chord of the truss is sloped. If the bottom chord slopes more than 4:12, nonadhesive binder blown insulation must not be used.

For the majority of cases, values will be selected from column A of this table. Column A applies for the common situation where either batt or blown insulation is placed directly over the ceiling. Builders or designers may increase thermal performance by adding a continuous insulation layer at the ceiling. The continuous insulation is typically a rigid polystyrene or polyisocyurnate foam insulation. Continuous insulation does not include the blown or batt insulation that is over the bottom chord of the truss (this is already accounted for in the first column data).

When this table is used manually, the R-value of continuous insulation shall be equal to or greater than the R-value published in the continuous insulation columns. No interpolation is permitted when data from the table is used manually. CEC approved software, however, may determine the U-factor for any amount of continuous insulation and for unusual construction layers using Equation 4-1 and Equation 4-2.

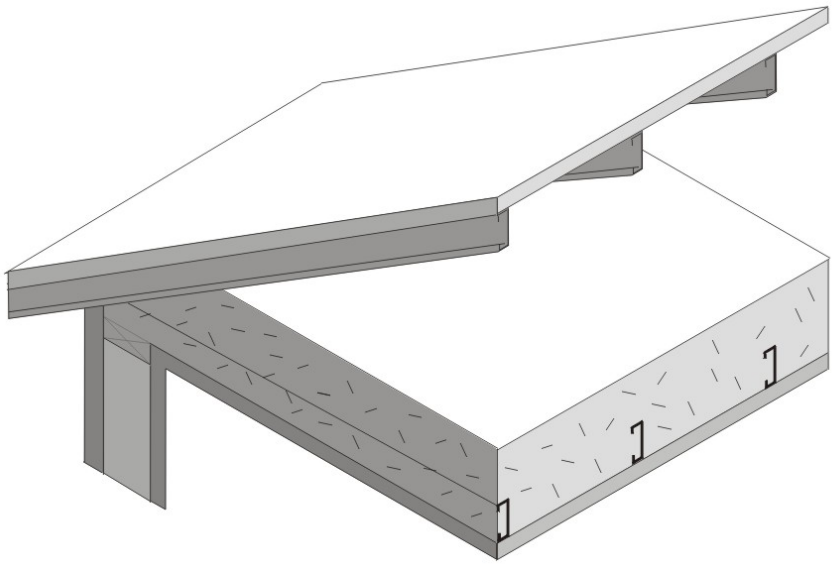

Figure 4.2.4 – Metal Framed Attic Roofs

Assumptions: These data are calculated using the zone method calculation documented in the 2009 ASHRAE Handbook of Fundamentals. These calculations assume an exterior air film of R-0.17, asphalt shingles of R-0.44 (AR02), building paper of R-0.06 (BP01), ½ inch of wood based sheathing (Custom), the attic air space (greater than 3.5 inch) of R-0.80, the insulation / framing layer, continuous insulation (if any) ½ inch gypsum of R-0.45 (GP01), and an interior air film (heat flow up) of R-0.61. The framing percentage is assumed to be 10 percent for 16 inch on center and 7 percent for 24 inch on center 7.25 percent of the attic insulation above the framing members is assumed to be at half depth, due to decreased depth of insulation at the eaves. Steel framing has 1.5 inch flange and is 0.0747 inch thick steel with no knockouts. U-factors calculated using EZ Frame 2.0.

Table 4.2.5 – U-factors of Metal Framed Rafter Roofs

Spacing	R-Value of Insulation Between Framing	Nominal Framing Size		Rated R-value of Continuous Insulation							
				R-0	R-2	R-4	R-6	R-7	R-8	R-10	R-14
				A	B	C	D	E	F	G	H
16 in. OC	None	Any	**1**	0.325	0.197	0.141	0.110	0.099	0.090	0.076	0.059
	R-11[2]	2x4	**2**	0.129	0.103	0.085	0.073	0.068	0.063	0.056	0.046
	R-13[2]	2x4	**3**	0.121	0.097	0.082	0.070	0.066	0.061	0.055	0.045
	R-15[2]	2x4	**4**	0.115	0.093	0.079	0.068	0.064	0.060	0.053	0.044
	R-19[2,3]	2x4	**5**	0.121	0.097	0.082	0.070	0.066	0.061	0.055	0.045
	R-11	2x6	**6**	0.123	0.099	0.082	0.071	0.066	0.062	0.055	0.045
	R-13	2x6	**7**	0.115	0.093	0.079	0.068	0.064	0.060	0.053	0.044
	R-15[2]	2x6	**8**	0.101	0.084	0.072	0.063	0.059	0.056	0.050	0.042
	R-19[2]	2x6	**9**	0.100	0.083	0.071	0.063	0.059	0.056	0.050	0.042
	R-19[2]	2x8	**10**	0.096	0.081	0.069	0.061	0.057	0.054	0.049	0.041
	R-21	2x8	**11**	0.093	0.078	0.068	0.060	0.056	0.053	0.048	0.040
	R-25	2x10	**12**	0.084	0.072	0.063	0.056	0.053	0.050	0.046	0.039
	R-30[4]	2x10	**13**	0.079	0.068	0.060	0.054	0.051	0.048	0.044	0.038
	R-30	2x12	**14**	0.076	0.066	0.058	0.052	0.050	0.047	0.043	0.037
	R-38 [4]	2x12	**15**	0.071	0.062	0.055	0.050	0.047	0.045	0.042	0.036
	R-38 [4]	2x14	**16**	0.068	0.060	0.053	0.048	0.046	0.044	0.040	0.035
24 in. OC	None	Any	**22**	0.322	0.196	0.141	0.110	0.099	0.090	0.076	0.058
	R-11[2]	2x4	**23**	0.111	0.091	0.077	0.067	0.062	0.059	0.053	0.043
	R-13[2]	2x4	**24**	0.102	0.085	0.072	0.063	0.060	0.056	0.050	0.042
	R-15[2]	2x4	**25**	0.096	0.081	0.069	0.061	0.057	0.054	0.049	0.041
	R-19[2,3]	2x4	**26**	0.102	0.085	0.072	0.063	0.060	0.056	0.050	0.042
	R-11	2x6	**27**	0.107	0.088	0.075	0.065	0.061	0.058	0.052	0.043
	R-13	2x6	**28**	0.099	0.083	0.071	0.062	0.058	0.055	0.050	0.041
	R-15[2]	2x6	**29**	0.086	0.073	0.064	0.057	0.054	0.051	0.046	0.039
	R-19[2]	2x6	**30**	0.083	0.071	0.062	0.055	0.052	0.050	0.045	0.038
	R-19[2]	2x8	**31**	0.080	0.0690	0.061	0.054	0.051	0.049	0.044	0.038
	R-21	2x8	**32**	0.076	0.066	0.058	0.052	0.050	0.047	0.043	0.037
	R-25	2x10	**33**	0.068	0.060	0.053	0.048	0.046	0.044	0.040	0.035
	R-30[4]	2x10	**34**	0.063	0.056	0.050	0.046	0.044	0.042	0.039	0.033
	R-30	2x12	**35**	0.061	0.054	0.049	0.045	0.043	0.041	0.038	0.033
	R-38[4]	2x12	**36**	0.055	0.050	0.045	0.041	0.040	0.038	0.035	0.031
	R-38[4]	2x14	**37**	0.053	0.048	0.044	0.040	0.039	0.037	0.035	0.030

Notes:

1. Rigid foam board used for cavity insulation must fill the entire cavity between the rafters and be sealed properly to prevent air gaps, and must be secured properly to prevent any future discrepancies in the construction assembly.

2. This assembly is only allowed where ventilation is provided between the bottom of the roof deck and the top of the insulation meeting, CBC requirements or enforcement agency officials approval of rafter attic assemblies with no ventilation air spaces.

3. This assembly requires insulation with an R-value per inch 5.6 or larger (k-factor 1.8 or less). This is board type insulation, mostly Isocyanurate. Medium density spray polyurethane foam may also be used to meet this requirement if the quality installation procedures and documentation in

Joint Appendix 7 are followed. Documentation from Directory of Certified insulation materials must be provided to show compliance with this assembly.

4. Higher density fiberglass batt is needed to achieve the indicated U-factor. R-30 must be achieved with less than 8.25 inch full thickness. R-38 must be achieved with less than 10.25 inch thickness (R-30c, R-38c).

This table contains pre-calculated U-factors for metal-framed rafter roofs where the ceiling is the air barrier. This construction assembly is similar to that covered by Table 4.2.2 except that metal framing members are substituted for the wood-framing members. The rafters may be either flat or in a sloped application. Insulation is typically installed between the rafters. With this construction, the insulation is in contact with the ceiling and there is typically a one-inch air gap above the insulation so that moisture can be vented. Whether there is an air space above the insulation depends on local climate conditions and may not be required in some building permit jurisdictions.

U-factors are selected from Column A of this table when there is no continuous insulation. When continuous insulation is installed either at the ceiling or at the roof, then U-factors from other columns may be selected. The continuous insulation is typically a rigid polystyrene or polyisocyanurate foam insulation,but can also include mineral wool or other suitable materials.

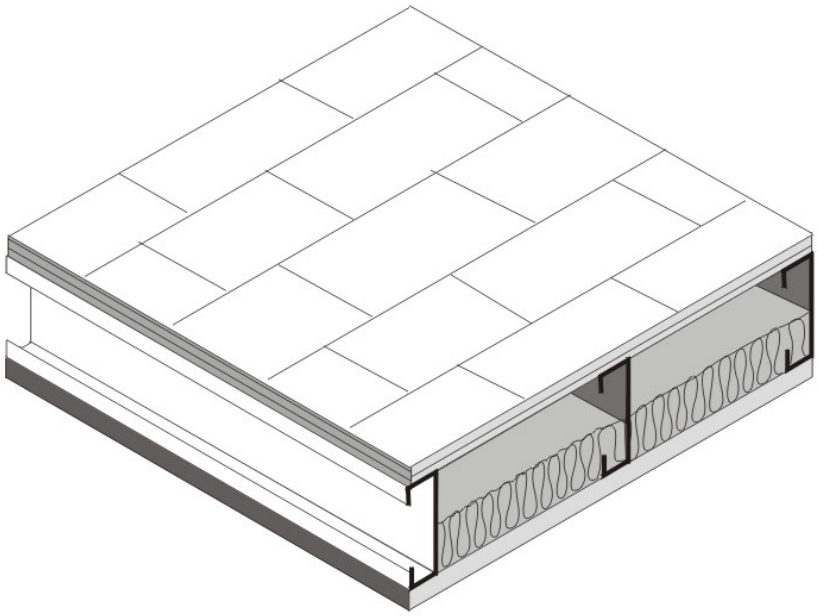

Figure 4.2.5 – Metal Framed Rafter Roof

When this table is used manually, the R-value of continuous insulation shall be equal to or greater than the R-value published in the continuous insulation columns. For instance, if the insulation is R-3, the R-2 column shall be used. No interpolation is permitted when data from the table is used manually. Commission approved software, however, may determine the U-factor for any amount of continuous insulation and/or for unusual construction layers using Equation 4-1 and Equation 4-2.

Assumptions: These data are calculated using the zone calculation method documented in the 2009 ASHRAE Handbook of Fundamentals. These calculations assume an exterior air film of R-0.17, asphalt shingles of R-0.44 (AR02), building paper of R-0.06 (BP01), ½ inch of wood based sheathing (Custom), the insulation / framing layer, ½ inch gypsum of R-0.45 (GP01), and an interior air film (heat flow up diagonally) of R-0.62 The continuous insulation may either be

located at the ceiling or over the structural deck. The thickness of framing members is assumed to be 3.50, 5.50, 7.25, 9.25, and 11.25 inch for 2x4, 2x6, 2x8, 2x10, and 2x12 nominal sizes. High-density batt insulation is assumed to be 8.5 in. thick for R-30 and 10.5 in thick for R-38. Framing spacing is 10 percent for 16 inches on center and 7 percent for 24 inches on center. Steel framing has 1.5 inch flange and is 0.075 inch thick steel with no knockouts. U-factors calculated using EZ Frame 2.0.

Table 4.2.6 –U-factors for Span Deck and Concrete Roofs

Fireproofing	Concrete Topping Over Metal Deck		R-value of Continuous Insulation									
			None	R-4	R-6	R-8	R-10	R-12	R-15	R-20	R-25	R-30
			A	B	C	D	E	F	G	H	I	J
Yes	None	**1**	0.348	0.145	0.113	0.092	0.078	0.067	0.056	0.044	0.036	0.030
	2 in.	**2**	0.324	0.141	0.110	0.090	0.076	0.066	0.055	0.043	0.036	0.030
	4 in.	**3**	0.302	0.137	0.107	0.088	0.075	0.065	0.055	0.043	0.035	0.030
	6 in.	**4**	0.283	0.133	0.105	0.087	0.074	0.064	0.054	0.042	0.035	0.030
No	None	**5**	0.503	0.167	0.125	0.100	0.083	0.071	0.059	0.045	0.037	0.031
	2 in.	**6**	0.452	0.161	0.122	0.098	0.082	0.070	0.058	0.045	0.037	0.031
	4 in.	**7**	0.412	0.156	0.119	0.096	0.080	0.069	0.057	0.045	0.036	0.031
	6 in.	**8**	0.377	0.150	0.116	0.094	0.079	0.068	0.057	0.044	0.036	0.031

1. In climate zones 1 and 16 the insulating R-value of continuous insulation materials installed above the roof waterproof membrane shall be multiplied by 0.8 before choosing the table column for determining assembly U-factor.

The constructions in this table are typical of Type I and Type II steel framed or concrete nonresidential buildings. The construction consists of a metal deck with or without a concrete topping. It may also be used for a metal deck or even wood deck ceiling as long as the insulation is continuous. Fireproofing may be sprayed onto the underside of the metal deck; it also covers steel structural members. Insulation is typically installed above the structural deck and below the waterproof membrane. This table may also be used for reinforced concrete roofs that do not have a metal deck. In this case, the fireproofing will typically not be installed and choices from the table should be made accordingly.

When this table is used manually, the R-value of continuous insulation shall be equal to or greater than the R-value published in the continuous insulation columns. No interpolation is permitted when data from the table is used manually. Commission approved compliance software, however, may determine the U-factor for any amount of continuous insulation and for unusual construction layers using Equation 4-1 and Equation 4-2. If the data is adjusted using Equation 4-2, the user shall take credit for a ceiling and the air space above the ceiling only if the ceiling serves as an air barrier. Suspended or T-bar ceilings do not serve as air barriers.

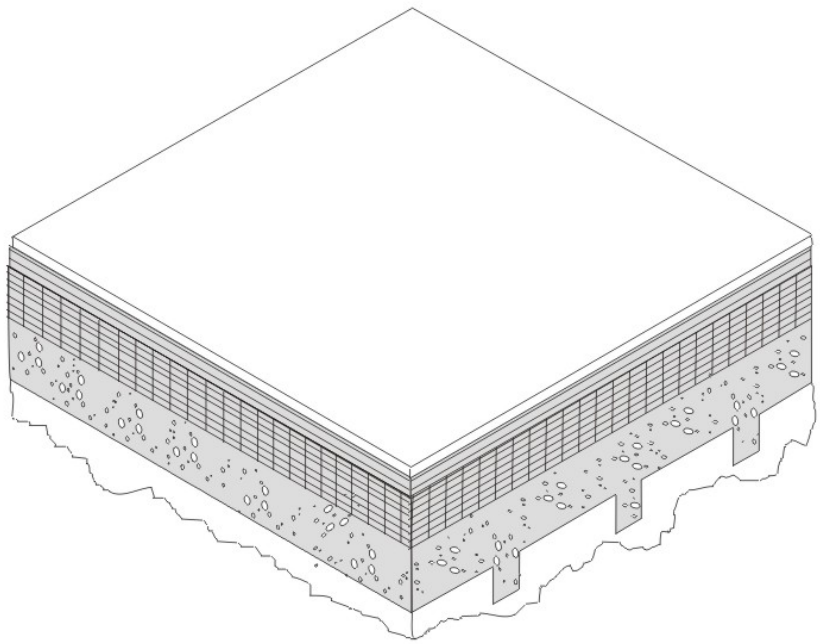

Figure 4.2.6 – Span Deck and Concrete Roof

Assumptions: These calculations are made using the parallel path method documented in the 2009 ASHRAE Handbook of Fundamentals. The assembly is assumed to consist of an exterior air film of R-0.17, a single ply roofing membrane (R-0.15), protective board (R-1.06), continuous insulation (if any), concrete topping with a density of 120 lb/ft and an R-value of 0.11 per inch (if any), metal span deck (negligible), and fireproofing (R-0.88). While a suspended ceiling typically exists below the structure, this is not considered part of the construction assembly therefore the same U-values are used for assemblies with or without suspended ceilings. The fireproofing is assumed to be equivalent to 60 lb/ft^3 concrete with a resistance of 0.44 per inch.

Table 4.2.7 – U-factors for Metal Building Roofs

Insulation System	R-Value of Insulation	Overall U-Factor for Entire Base Roof Assembly		Rated R-value of Continuous Insulation								
				R-6	R-9	R-13	R-15	R-19	R-22	R-25	R-32	R-38
				A	B	C	D	E	F	G	H	I
Screw Down Roofs (no Thermal Blocks)	R-10	0.184	**1**	0.087	0.069	0.054	0.049	0.041	0.036	0.033	0.027	0.023
	R-11	0.182	**2**	0.087	0.069	0.054	0.049	0.041	0.036	0.033	0.027	0.023
	R-13	0.174	**3**	0.085	0.068	0.053	0.048	0.040	0.036	0.033	0.026	0.023
	R-16	0.157	**4**	0.081	0.065	0.052	0.047	0.039	0.035	0.032	0.026	0.023
	R-19	0.151	**5**	0.079	0.064	0.051	0.046	0.039	0.035	0.032	0.026	0.022
Standing Seam Roof with Single Layer of Insulation Draped over Purlins and Compressed. Thermal blocks at supports.[2]	None	1.280	**6**	0.147	0.102	0.073	0.063	0.051	0.044	0.039	0.031	0.026
	R-10	0.115	**7**	0.068	0.057	0.046	0.042	0.036	0.033	0.030	0.025	0.021
	R-11	0.107	**8**	0.065	0.055	0.045	0.041	0.035	0.032	0.029	0.024	0.021
	R-13	0.101	**9**	0.063	0.053	0.044	0.040	0.035	0.031	0.029	0.024	0.021
	R-16	0.096	**10**	0.061	0.052	0.043	0.039	0.034	0.031	0.028	0.024	0.021
	R-19	0.082	**11**	0.055	0.047	0.040	0.037	0.032	0.029	0.027	0.023	0.020
Standing Seam Roof with Double Layer of Insulation.[3]Thermal blocks at supports.[2]	R-10 + R-10	0.088	**12**	0.058	0.049	0.041	0.038	0.033	0.030	0.028	0.023	0.020
	R-10 + R-11	0.086	**13**	0.057	0.048	0.041	0.038	0.033	0.030	0.027	0.023	0.020
	R-11 + R-11	0.085	**14**	0.056	0.048	0.040	0.037	0.033	0.030	0.027	0.023	0.020
	R-10 + R-13	0.084	**15**	0.056	0.048	0.040	0.037	0.032	0.029	0.027	0.023	0.020
	R-11 + R-13	0.082	**16**	0.055	0.047	0.040	0.037	0.032	0.029	0.027	0.023	0.020
	R-13 + R-13	0.075	**17**	0.052	0.045	0.038	0.035	0.031	0.028	0.026	0.022	0.019
	R-10 + R-19	0.074	**18**	0.051	0.044	0.038	0.035	0.031	0.028	0.026	0.022	0.019
	R-11 + R-19	0.072	**19**	0.050	0.044	0.037	0.035	0.030	0.028	0.026	0.022	0.019
	R-13 + R-19	0.068	**20**	0.048	0.042	0.036	0.034	0.030	0.027	0.025	0.021	0.019
	R-16 + R-19	0.065	**21**	0.047	0.041	0.035	0.033	0.029	0.027	0.025	0.021	0.019
	R-19 + R-19	0.060	**22**	0.044	0.039	0.034	0.032	0.028	0.026	0.024	0.021	0.018
Filled Cavity with Thermal Blocks [3,4,5]	R10 + R-19	0.041	**23**	0.033	0.030	0.027	0.025	0.023	0.022	0.020	0.018	0.016

Notes:

1. A roof must have metal purlins no closer than 4 ft on center to use this table. If the roof deck is attached to the purlins more frequently than 12 in oc, 0.008 must be added to the U-factors in this table.

2. Thermal blocks are an R-3 of rigid insulation, which extends 1.5" beyond the width of the purlin on each side.

3. Multiple R-values are listed in order from outside to inside. First layer is parallel to the purlins, and supported by a system; second layer is laid on top of the purlins.

4. Thermal blocks are an R-5 of rigid insulation, which extends 1.5" beyond the width of the purlin on each side.

5. In climate zones 1 and 16 the insulating R-value of continuous insulation materials installed above the roof waterproof membrane shall be multiplied times 0.8 before choosing the table column for determining assembly U-factor.

The U-factors in this table are intended for use with metal building roofs. This type of construction is typical for manufacturing and warehouse facilities, but is used for other building types as well. The typical method of insulating this type of building is to drape vinyl backed fiberglass insulation over the metal purlins before the metal deck is attached with metal screws. With this method, the insulation is compressed at the supports, reducing its effectiveness. The first part of the table contains values for this insulation technique. The second section of the table has data for the case when a thermal block is used at the support. The insulation is still compressed, but the thermal block, which generally consists of an 8 inch wide strip of foam

insulation, improves the thermal performance. The third section of the table deals with systems that involve two layers of insulation.

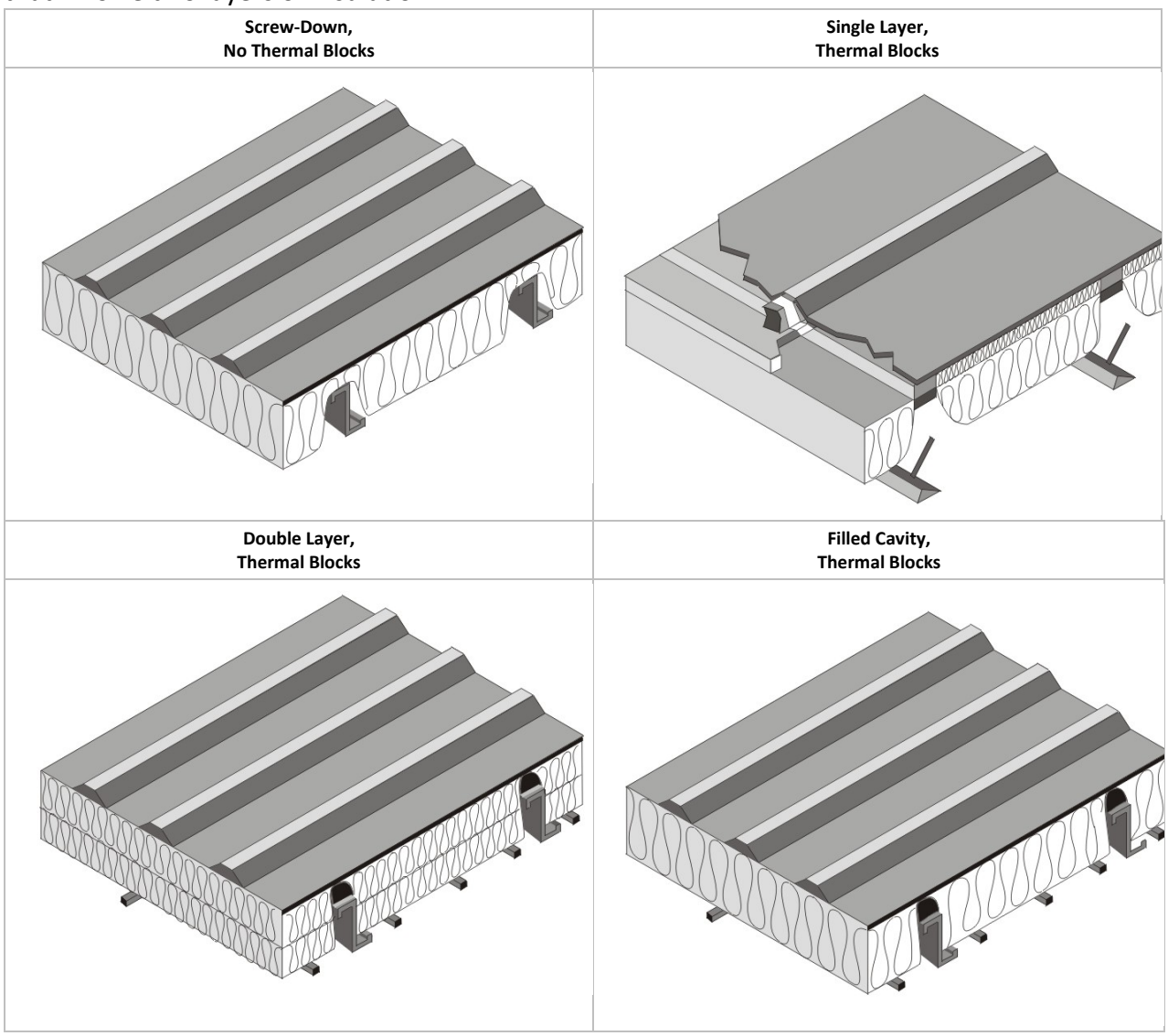

Figure 4.2.7 – Metal Building Roofs

For the majority of cases, values will be selected from column A of this table. Builders or designers may increase thermal performance by adding a continuous insulation layer between the metal decking and the structural supports. The continuous insulation is typically a rigid polystyrene or polyisocyanurate foam insulation.

When this table is used manually, the R-value of continuous insulation shall be equal to or greater than the R-value published in the continuous insulation columns. No interpolation is permitted when data from the table is used manually. Commission approved compliance software, however, may determine the U-factor for any amount of continuous insulation using Equation 4-1.

Assumptions: Data in Column A of this table is taken from the ASHRAE/IESNA Standard 90.1-2004, Appendix A. The data is also published in the NAIMA *Compliance for Metal Buildings*, 1997.

Table 4.2.8 – U-factors for Insulated Ceiling with Removable Panels

R-value of Insulation Over Suspended Ceiling		U-factor
None	**1**	0.304
7	**2**	0.152
11	**3**	0.132
13	**4**	0.126
19	**5**	0.113
21	**6**	0.110
22	**7**	0.109
30	**8**	0.102
38	**9**	0.098
49	**10**	0.094
60	**11**	0.092

This table includes U-factors for the case of insulation placed over suspended ceilings. This situation is only permitted for a combined floor area no greater than 2,000 square feet in an otherwise unconditioned building, and when the average height of the space between the ceiling and the roof over these spaces is greater than 12 feet. The suspended ceiling does not provide an effective air barrier and leakage is accounted for in the calculations.

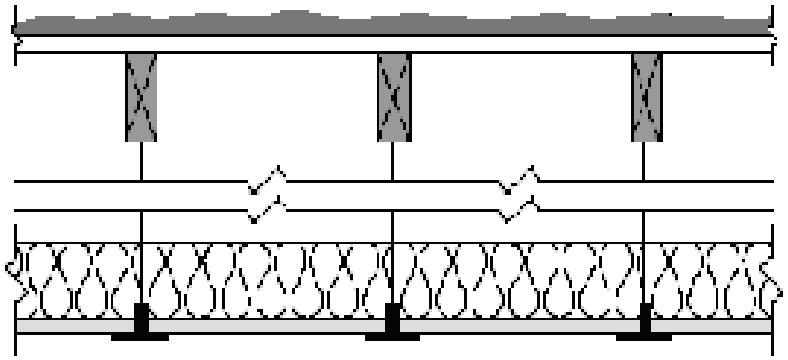

Figure 4.2.8 – Insulated Ceiling with Removable Panels

Assumptions: These calculations assume an exterior air film of R-0.17, a built-up roof of R-0.33 (BR01), ¾ inch wood based sheathing (Custom), a twelve foot air space of R-0.80, the insulation (for the insulated portion), removable ceiling panels with a R-0.50 and an interior air film (heat flow up) of R-0.61. 75 percent of the ceiling is assumed covered by insulation and the remainder is not insulated. The uninsulated portion includes lighting fixtures and areas where the insulation is not continuous. A correction factor of 0.005 is added to the resulting U-factor to account for infiltration through the suspended ceiling and lighting fixtures.

Table 4.2.9 – U-factors of Insulated Metal Panel Roofs and Ceilings

Panel Thickness		U-factor (Btu/^{0}F-ft^2) A
2”	**1**	0.079
2 ½”	**2**	0.064
3”	**3**	0.054
4”	**4**	0.041
5”	**5**	0.033
6”	**6**	0.028

This table contains thermal performance data (U-factors) for foamed-in-place, insulated metal panels consisting of liquid polyurethane or polyisocyanurate injected between metal skins in individual molds or on fully automated production lines. Metal building construction is the most common application for this product where the metal panel is fastened to the frame of the structure. This table can only be used for insulated panels that are factory built. This table does not apply to panels that utilize polystyrene, or to field applied products such as spray applied insulations.

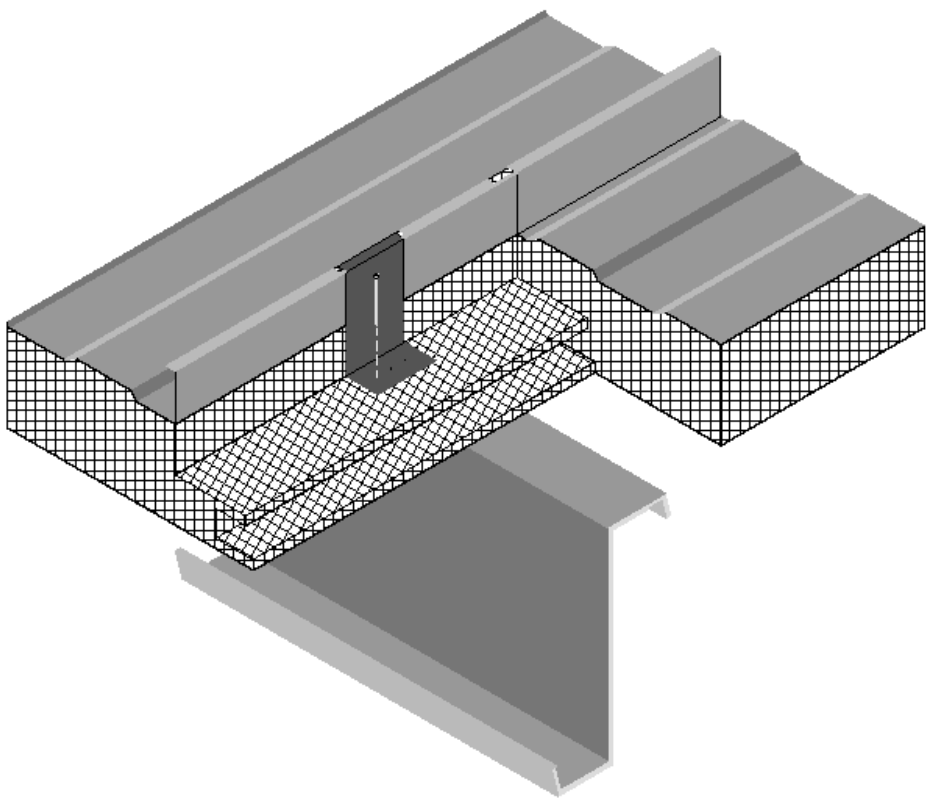

Figure 4.2.9 –Insulated Metal Panel Roofs

Assumptions: These data are calculated using the parallel path method documented in the 2009 ASHRAE Handbook of Fundamentals. These calculations assume an exterior air film of R-0.17, light gauge metal exterior of R-0.0747, continuous insulation R-5.9 per inch, light gauge metal interior of 0.0747 inch thickness and an interior air film (heat flow up) of R-0.61. The panels are assumed to be continuous with no framing penetration. The R-value of the light gauge metal is negligible.

JA4.3 Walls

Table 4.3.1 – U-factors of Wood Framed Walls with 1/2-inch Gypsum Board

Spacing	Cavity Insulation	Nominal Framing Size	Rated R-value of Continuous Insulation [2]										
				R-0	R-2	R-4	R-5	R-6	R-7	R-8	R-10	R-12	R-15
				A	B	C	D	E	F	G	H	I	J
16 in. OC	None	Any	1	0.356	0.209	0.146	0.127	0.113	0.101	0.092	0.078	0.067	0.056
	R-11	2x4	2	0.110	0.088	0.074	0.068	0.064	0.060	0.056	0.050	0.045	0.040
	R-13	2x4	3	0.102	0.082	0.069	0.064	0.060	0.056	0.053	0.047	0.043	0.038
	R-15 [1]	2x4	4	0.095	0.077	0.065	0.060	0.056	0.053	0.050	0.045	0.041	0.036
	R-19	2x6	5	0.074	0.063	0.055	0.051	0.049	0.046	0.044	0.040	0.037	0.033
	R-20	2x6	6	0.071	0.060	0.052	0.049	0.047	0.044	0.042	0.039	0.036	0.032
	R-21[1]	2x6	7	0.069	0.059	0.051	0.048	0.046	0.043	0.041	0.038	0.035	0.031
	R-22	2x6	8	0.072	0.062	0.054	0.051	0.048	0.045	0.043	0.037	0.036	0.033
	R-23	2x6	9	0.067	0.057	0.049	0.047	0.044	0.042	0.040	0.037	0.034	0.030
	R-25	2x6	10	0.065	0.055	0.048	0.045	0.043	0.040	0.039	0.035	0.036	0.032
	R-19	2x8	11	0.065	0.057	0.051	0.048	0.045	0.043	0.041	0.038	0.035	0.032
	R-22	2x8	12	0.061	0.053	0.047	0.045	0.043	0.041	0.039	0.036	0.033	0.030
	R-25	2x8	13	0.057	0.050	0.044	0.042	0.040	0.038	0.037	0.034	0.032	0.029
	R-30[1]	2x8	14	0.056	0.049	0.044	0.041	0.040	0.038	0.036	0.033	0.031	0.028
24 in. OC	None	Any	15	0.362	0.211	0.148	0.128	0.114	0.102	0.092	0.078	0.067	0.056
	R-11	2x4	16	0.106	0.086	0.072	0.067	0.062	0.059	0.055	0.050	0.045	0.039
	R-13	2x4	17	0.098	0.079	0.067	0.062	0.058	0.055	0.052	0.047	0.043	0.038
	R-15	2x4	18	0.091	0.074	0.063	0.059	0.055	0.052	0.049	0.044	0.040	0.036
	R-19	2x6	19	0.071	0.061	0.053	0.050	0.048	0.045	0.043	0.040	0.036	0.033
	R-20	2x6	20	0.068	0.058	0.051	0.048	0.045	0.043	0.041	0.038	0.035	0.031
	R-21[1]	2x6	21	0.066	0.057	0.050	0.047	0.045	0.042	0.040	0.037	0.034	0.031
	R-22	2x6	22	0.069	0.060	0.052	0.049	0.047	0.044	0.042	0.036	0.036	0.033
	R-23	2x6	23	0.064	0.054	0.048	0.045	0.043	0.041	0.039	0.036	0.033	0.030
	R-25	2x6	24	0.061	0.052	0.046	0.043	0.041	0.039	0.037	0.034	0.035	0.031
	R-19	2x8	25	0.063	0.055	0.049	0.047	0.045	0.043	0.041	0.037	0.035	0.031
	R-22	2x8	26	0.058	0.051	0.046	0.044	0.042	0.040	0.038	0.035	0.033	0.030
	R-25	2x8	27	0.055	0.048	0.043	0.041	0.039	0.037	0.036	0.033	0.031	0.028
	R-30[1]	2x8	28	0.054	0.047	0.042	0.040	0.038	0.037	0.035	0.033	0.030	0.028

Notes

1. Higher density fiberglass batt is required in these cases.
2. Continuous insulation may be installed on either the inside or the exterior of the wall, or both.

This table contains U-factors for wood framed walls, which are typical of low-rise residential buildings and Type V nonresidential buildings. If continuous insulation is not used, then choices are made from Column A. In this case, the insulation is installed in the cavity between the framing members. When continuous insulation is used, this is typically installed on the exterior

side of the wall, but can also be used on the inside. The continuous insulation is typically a rigid polystyrene or polyisocyanurate foam insulation.

When this table is used manually, the R-value of continuous insulation shall be equal to or greater than the R-value published in the continuous insulation columns. No interpolation is permitted when data from the table is used manually. Commission approved compliance software, however, may determine the U-factor for any amount of continuous insulation or for unusual construction assemblies using Equation 4-1 and Equation 4-2.

Table 4.3.1(a) – U-factors of Wood Framed Walls with 5/8-inch Gypsum Board[1] (Only to be used when 5/8 inch gypsum is installed)

Spacing	**Cavity Insulation**	**Nominal Framing Size**	**Rated R-value of Continuous Insulation [3]**								
				R-0	**R-2**	**R-4**	**R-5**	**R-6**	**R-7**	**R-8**	**R-10**
				A	**B**	**C**	**D**	**E**	**F**	**G**	**H**
16 in. OC	None	Any	1	0.343	0.208	0.145	0.126	0.112	0.100	0.091	0.077
	R-11	2x4	2	0.109	0.087	0.073	0.067	0.063	0.059	0.055	0.050
	R-13	2x4	3	0.101	0.081	0.068	0.063	0.059	0.056	0.052	0.047
	R-15 [2]	2x4	4	0.094	0.076	0.064	0.059	0.055	0.052	0.049	0.045
	R-19	2x6	5	0.073	0.062	0.054	0.050	0.048	0.045	0.043	0.040
	R-21[2]	2x6	6	0.068	0.058	0.050	0.047	0.045	0.041	0.040	0.038
	R-22	2x6	7	0.071	0.061	0.053	0.050	0.047	0.044	0.042	0.039
	R-19	2x8	8	0.064	0.056	0.050	0.047	0.044	0.042	0.040	0.038
	R-22	2x8	9	0.060	0.052	0.046	0.044	0.042	0.040	0.038	0.036
	R-25	2x8	10	0.056	0.049	0.043	0.041	0.039	0.037	0.036	0.034
	R-30[2]	2x8	11	0.055	0.048	0.043	0.040	0.039	0.037	0.035	0.033
24 in. OC	None	Any	12	0.361	0.210	0.147	0.127	0.113	0.101	0.091	0.077
	R-11	2x4	13	0.105	0.085	0.071	0.066	0.061	0.058	0.055	0.049
	R-13	2x4	14	0.097	0.078	0.066	0.061	0.057	0.054	0.052	0.046
	R-15	2x4	22	0.090	0.073	0.062	0.058	0.054	0.051	0.049	0.04
	R-19	2x6	15	0.070	0.060	0.052	0.049	0.047	0.044	0.043	0.039
	R-21[2]	2x6	16	0.065	0.056	0.049	0.046	0.044	0.041	0.040	0.037
	R-22	2x6	17	0.068	0.059	0.051	0.048	0.046	0.043	0.042	0.038
	R-19	2x8	18	0.062	0.054	0.048	0.046	0.044	0.042	0.041	0.037
	R-22	2x8	19	0.057	0.050	0.045	0.043	0.041	0.039	0.038	0.035
	R-25	2x8	20	0.054	0.047	0.042	0.040	0.038	0.036	0.036	0.033
	R-30[1]	2x8	21	0.053	0.046	0.041	0.039	0.037	0.036	0.035	0.033

Notes

1. The 5/8 inch gypsum board must be verified by the enforcement agency. If 5/8 inch gypsum board is not installed use table 4.3.1.
2. Higher density fiberglass batt is required in these cases.
3. Continuous insulation may be installed on either the inside or the exterior of the wall, or both.

This table contains U-factors for wood framed walls, which are typical of low-rise residential buildings and Type V nonresidential buildings. If continuous insulation is not used, then choices

are made from Column A. In this case, the insulation is installed in the cavity between the framing members. When continuous insulation is used, this is typically installed on the exterior side of the wall, but can also be used on the inside. The continuous insulation is typically a rigid polystyrene or polyisocyanurate foam insulation.

When this table is used manually, the R-value of continuous insulation shall be equal to or greater than the R-value published in the continuous insulation columns. No interpolation is permitted when data from the table is used manually. Commission approved compliance software, however, may determine the U-factor for any amount of continuous insulation or for unusual construction assemblies using Equation 4-1 and Equation 4-2.

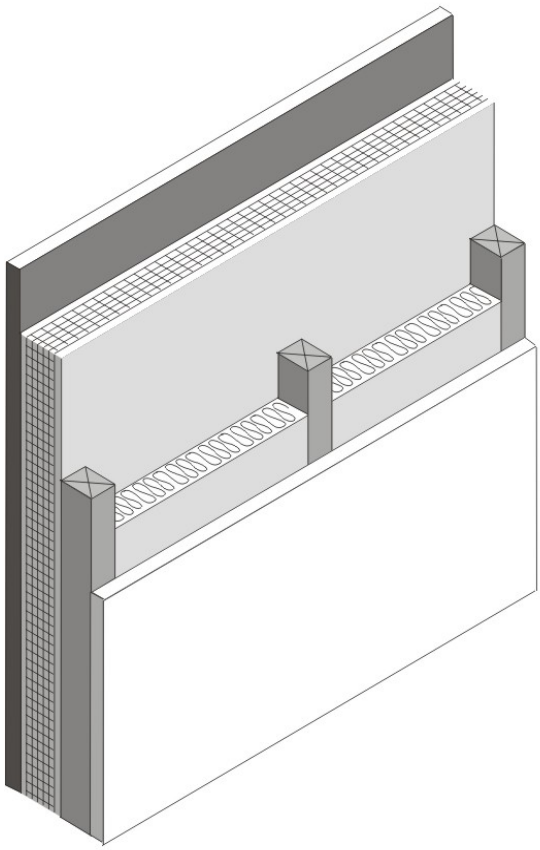

Figure 4.3.1 – Wood Framed Wall

Assumptions: Values in this table were calculated using the parallel heat flow calculation method, documented in the 2009 ASHRAE Handbook of Fundamentals. The construction assembly assumes an exterior air film of R-0.17, a 7/8 inch layer of stucco of R-0.18 (SC01), building paper of R-0.06 (BP01), continuous insulation (if any), the cavity insulation / framing layer, 1/2 inch gypsum board of R-0.45 (GP01) or 5/8 inch gypsum board of R-0.56, and an interior air film 0.68. The framing factor is assumed to be 25 percent for 16 inch stud spacing and 22 percent for 24 inch spacing. Actual cavity depth is 3.5 inch for 2x4, 5.5 inch for 2x6, 7.25 inch for 2x8, 9.25 inch for 2x10, and 11.25 inch for 2x12. High density R-30 insulation is assumed to be 8.5 inch thick batt and R-38 is assumed to be 10.5 inch thick. The thickness of the stucco is assumed to be reduced to 3/8 inch when continuous insulation is applied.

Table 4.3.2 – U-factors of Structurally Insulated Wall Panels (SIPS)

Wood Framing Connection Type (spline)	Insulation Core R-value[1]	Typical Panel Thickness		Rated R-value of Continuous Insulation [5]					
				None	R-2	R-4	R-5	R-6	R-8
				A	B	C	D	E	F
OSB	R-14	4.5 in	**1**	0.061	0.055	0.049	0.047	0.045	0.041
Single 2x	R-14	4.5 in	**2**	0.071	0.061	0.054	0.051	0.048	0.044
Double 2x	R-14	4.5 in	**3**	0.077	0.065	0.057	0.054	0.050	0.046
I-joist	R-14	4.5 in	**4**	0.070	0.060	0.053	0.051	0.048	0.044
OSB	R-18[2]	4.5 in	**5**	0.053	0.045	0.041	0.039	0.037	0.034
Single 2x	R-18[2]	4.5 in	**6**	0.061	0.052	0.047	0.045	0.042	0.039
Double 2x	R-18[2]	4.5 in	**7**	0.066	0.056	0.050	0.048	0.045	0.041
I-joist	R-18[2]	4.5 in	**8**	0.059	0.051	0.046	0.044	0.042	0.038
OSB	R-22	6.5 in	**9**	0.041	0.038	0.036	0.035	0.033	0.031
Single 2x	R-22	6.5 in	**10**	0.050	0.044	0.040	0.039	0.037	0.034
Double 2x	R-22	6.5 in	**11**	0.054	0.048	0.043	0.041	0.039	0.036
I-joist	R-22	6.5 in	**12**	0.048	0.043	0.039	0.038	0.036	0.033
OSB	R-28	8.25 in	**13**	0.032	0.030	0.029	0.028	0.027	0.026
Single 2x	R-28	8.25 in	**14**	0.039	0.036	0.033	0.032	0.031	0.029
Double 2x	R-28	8.25 in	**15**	0.043	0.039	0.035	0.034	0.033	0.030
I-joist	R-28	8.25 in	**16**	0.037	0.034	0.032	0.031	0.030	0.028
OSB	R-33[3]	6.5 in	**17**	0.032	0.029	0.027	0.026	0.025	0.023
Single 2x	R-33[3]	6.5 in	**18**	0.038	0.034	0.031	0.030	0.029	0.027
Double 2x	R-33[3]	6.5 in	**19**	0.043	0.038	0.034	0.033	0.031	0.029
I-joist	R-33[3]	6.5 in	**20**	0.036	0.033	0.030	0.029	0.028	0.026
OSB	R-36	10.25 in	**21**	0.026	0.024	0.023	0.023	0.022	0.021
Single 2x	R-36	10.25 in	**22**	0.032	0.030	0.028	0.027	0.026	0.024
Double 2x	R-36	10.25 in	**23**	0.035	0.032	0.030	0.029	0.028	0.026
I-joist	R-36	10.25 in	**24**	0.030	0.028	0.026	0.026	0.025	0.023
OSB	R-44	12.25 in	**25**	0.022	0.021	0.020	0.020	0.019	0.018
Single 2x	R-44	12.25 in	**26**	0.027	0.025	0.024	0.023	0.022	0.021
Double 2x	R-44	12.25 in	**27**	0.028	0.027	0.025	0.025	0.024	0.023
I-joist	R-44	12.25 in	**28**	0.025	0.024	0.022	0.022	0.021	0.020
OSB	R-55[4]	10.25 in	**29**	0.020	0.019	0.017	0.016	0.016	0.016
Single 2x	R-55[4]	10.25 in	**30**	0.024	0.022	0.021	0.021	0.020	0.019
Double 2x	R-55[4]	10.25 in	**31**	0.028	0.025	0.023	0.023	0.022	0.021
I-joist	R-55[4]	10.25 in	**32**	0.022	0.021	0.019	0.019	0.018	0.018

Notes:

1. The insulation R-value must be at least R-14 in order to use this table. This table assumes moulded expanded polystyrene (EPS) unless noted otherwise. Although other insulation types are used by some SIP manufacturers, such as polyurethane and extruded expanded insulation (XPS), EPS is the most common insulation used in SIP construction.
2. R-18.1 is achievable using extruded expanded polystyrene (XPS) insulation in 4.5" thick panels.
3. R-33.2 is achievable using polyurethane insulation in 6.5" panels.
4. R-55.3 is achievable using polyurethane insulation in 10.25" panels.
5. Continuous insulation shall be at least R-2 and may be installed on either the inside or the exterior of the wall.

Structural insulated panels (SIPs) consist of a rigid insulation core, securely bonded between two structural facings, to form a structural sandwich panel. SIPs are considered a non-framed assembly usually with little or no structural framing that penetrates the insulation layer, resulting in less thermal bridging across the insulation when compared to a conventional framed assembly.

This table gives U-factors for structurally insulated panels used in wall construction. This is a construction system that consists of rigid foam insulation sandwiched between two layers of plywood or oriented strand board (OSB). Data is provided for four variations of connecting two panels together.

If continuous insulation is not used, then choices are made from Column A. When continuous insulation is also used, this is typically installed on the exterior side of the wall, but can also be used on the inside. The continuous insulation is typically a rigid polystyrene or polyisocyanurate foam insulation. Adding continuous insulation to a SIPS panel is highly unusual since the panel itself is mostly continuous insulation.

When this table is used manually, the R-value of continuous insulation shall be equal to or greater than the R-value published in the continuous insulation columns. No interpolation is permitted when data from the table is used manually. Commission approved software, however, may determine the U-factor for any amount of continuous insulation or for unusual construction assemblies using Equation 4-1 and Equation 4-2.

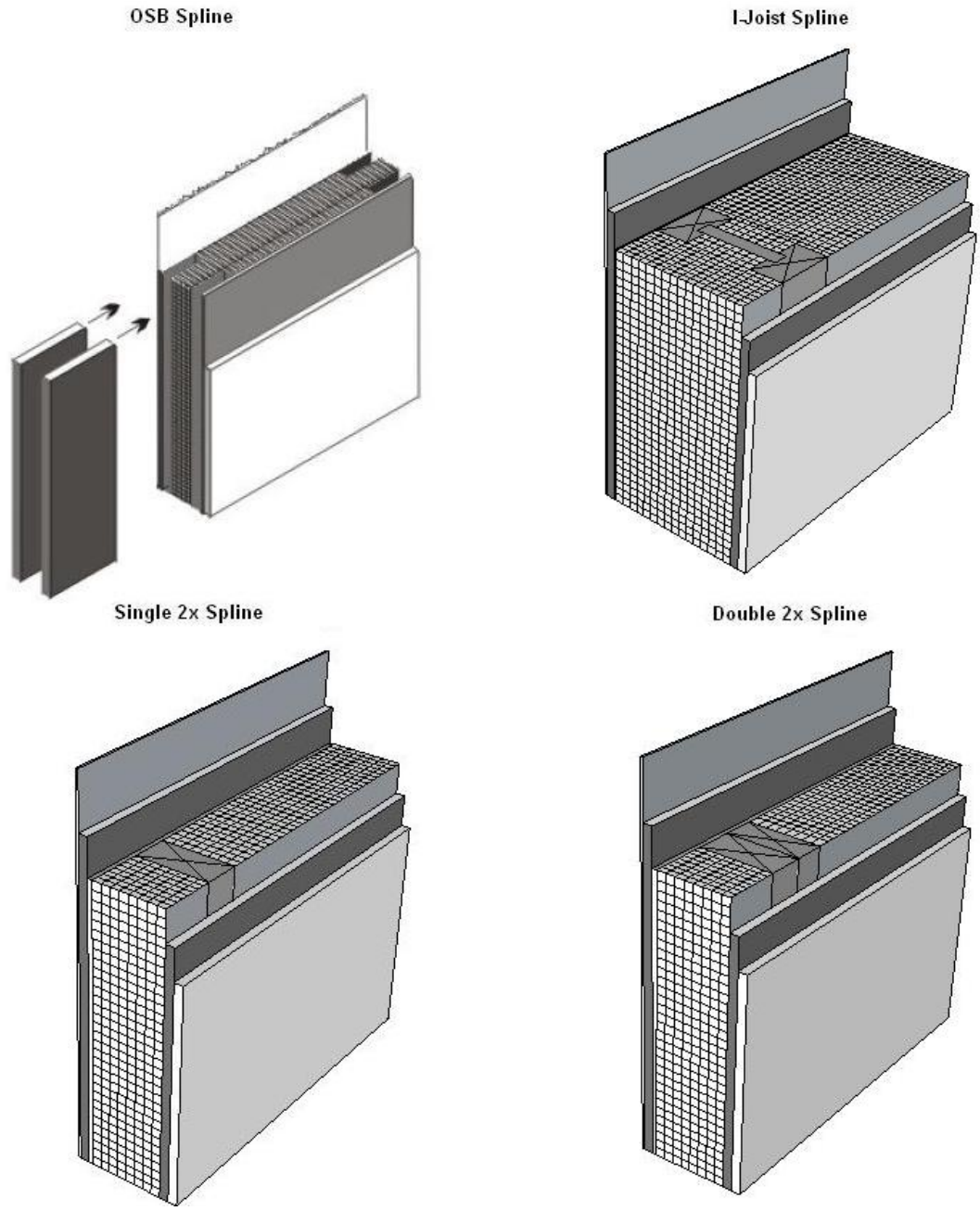

Figure 4.3.2 – Structurally Insulated Wall Panels (SIPS)

This figure shows just one way that panels are connected. Other options exist.

Assumptions: These data are calculated using the parallel path method documented in the 2009 ASHRAE Handbook of Fundamentals.

These calculations assume an exterior air film of R-0.17, a 7/8 inch layer of stucco of R-0.18, building paper of R-0.06 (BP01), 7/16 inch of OSB of R-0.44, insulation at carrying R-values (as specified), 7/16 inch of OSB of R-0.44, ½ inch gypsum board of R-0.45 (GP01), and in interior air film of R-0.68. A framing factor of 13 percent is assumed for wood spacers and 7 percent for the OSB spline system. Framing includes the sill plate, the header and framing around windows and doors.

Table 4.3.3 – U-factors of Metal Framed Walls for Nonresidential Construction

Spacing	Cavity Insulation R-Value:	Nominal Framing Size				Rated R-value of Continuous Insulation [2]								
				R-0	R-2	R-4	R-5	R-6	R-7	R-8	R-10	R-12	R-14	R-15
				A	B	C	D	E	F	G	H	I	J	K
16 in. OC	None	Any	**1**	0.458	0.239	0.162	0.139	0.122	0.109	0.098	0.082	0.071	0.062	0.058
	R-5	2x4	**2**	0.351	0.206	0.146	0.127	0.113	0.102	0.092	0.078	0.067	0.059	0.056
	R-11	2x4	**3**	0.224	0.155	0.118	0.106	0.096	0.087	0.080	0.069	0.061	0.054	0.052
	R-13	2x4	**4**	0.217	0.151	0.116	0.104	0.094	0.086	0.079	0.068	0.060	0.054	0.051
	R-15	2x4	**5**	0.211	0.148	0.114	0.103	0.093	0.085	0.078	0.068	0.060	0.053	0.050
	R-19	2x6	**6**	0.183	0.134	0.106	0.096	0.087	0.080	0.074	0.065	0.057	0.051	0.049
	R-20	2x6	7	0.181	0.133	0.105	0.095	0.087	0.080	0.074	0.064	0.057	0.051	0.049
	R-21[1]	2x6	8	0.178	0.131	0.104	0.094	0.086	0.079	0.073	0.064	0.057	0.051	0.049
	R-19	2x8	9	0.164	0.123	0.099	0.090	0.083	0.076	0.071	0.062	0.055	0.050	0.047
	R-22	2x8	10	0.160	0.121	0.098	0.089	0.082	0.075	0.070	0.062	0.055	0.049	0.047
	R-25	2x8	11	0.158	0.120	0.097	0.088	0.081	0.075	0.070	0.061	0.055	0.049	0.047
	R-30[1]	2x8	12	0.157	0.119	0.096	0.088	0.081	0.075	0.070	0.061	0.054	0.049	0.047
24 in. OC	None	Any	13	0.455	0.238	0.161	0.139	0.122	0.109	0.098	0.082	0.070	0.062	0.058
	R-5	2x4	14	0.333	0.200	0.143	0.125	0.111	0.100	0.091	0.077	0.067	0.059	0.056
	R-11	2x4	15	0.210	0.148	0.114	0.102	0.093	0.085	0.078	0.068	0.060	0.053	0.051
	R-13	2x4	16	0.203	0.144	0.112	0.101	0.092	0.084	0.077	0.067	0.059	0.053	0.051
	R-15	2x4	17	0.197	0.141	0.110	0.099	0.090	0.083	0.076	0.066	0.059	0.052	0.050
	R-19	2x6	18	0.164	0.123	0.099	0.090	0.083	0.076	0.071	0.062	0.055	0.050	0.047
	R-20	2x6	19	0.164	0.123	0.099	0.090	0.083	0.076	0.071	0.062	0.055	0.050	0.047
	R-21[1]	2x6	20	0.161	0.122	0.098	0.089	0.082	0.076	0.070	0.062	0.055	0.049	0.047
	R-19	2x8	21	0.153	0.117	0.095	0.087	0.080	0.074	0.069	0.060	0.054	0.049	0.047
	R-22	2x8	22	0.149	0.115	0.093	0.085	0.079	0.073	0.068	0.060	0.053	0.048	0.046
	R-25	2x8	23	0.147	0.114	0.093	0.085	0.078	0.072	0.068	0.060	0.053	0.048	0.046
	R-30[1]	2x8	24	0.146	0.113	0.092	0.084	0.078	0.072	0.067	0.059	0.053	0.048	0.046

Notes

1. Higher density fiberglass batt is required in these cases.
2. Continuous insulation may be installed on either the inside or the exterior of the wall, or both.

This table contains U-factors for steel or metal-framed walls, which are typical of nonresidential buildings. The table may be used for any construction assembly where the insulation is installed in the cavity of a metal-framed wall, or where continuous insulation is installed on the exterior or interior of the metal framing, or a combination of these two methods of insulating a metal-framed wall.

If continuous insulation is not used, then choices are made from Column A. In this case, the insulation is installed only in the cavity between the framing members. When continuous insulation is used, it is typically installed on the exterior side of the wall, but can also be used on the inside. The continuous insulation is typically a rigid polystyrene or polyisocyanurate foam insulation.

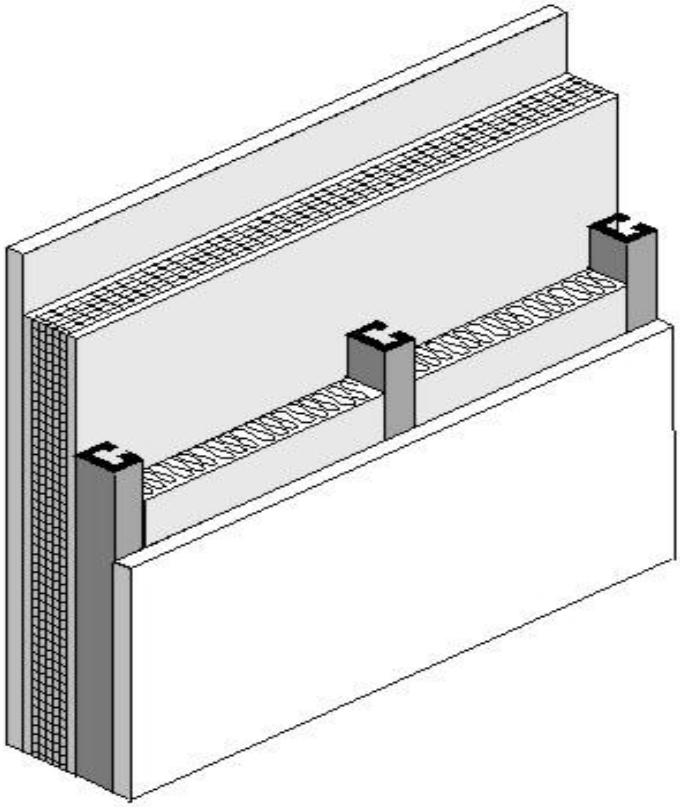

Figure 4.3.3 – Metal Framed Wall

When this table is used manually, the R-value of continuous insulation shall be equal to or greater than the R-value published in the continuous insulation columns. No interpolation is permitted when data from the table is used manually. Commission approved compliance software programs, however, may determine the U-factor for any amount of continuous insulation or for unusual construction assemblies using Equation 4-1 and Equation 4-2.

Assumptions: Values in this table were calculated using the zone calculation method. The construction assembly assumes an exterior air film of R-0.17, a 7/8 inch layer of stucco of R-0.18, building paper of R-0.06 (BP01), continuous insulation (if any), the insulation / framing layer, 1/2 inch gypsum of R-0.45 gypsum board (GP01), and an interior air film 0.68. The steel framing is assumed to be 0.0747 inch thick with a 15 percent knock out. The framing factor is assumed to be 25 percent for 16 inch stud spacing and 22 percent for 24 inch spacing. The EZFrame internal default framing percentages are 15 percent for 16 inch stud spacing and 12 percent for 24 inch spacing. To account for the increased wall framing percentage the frame spacing input to the EZ Frame program is reduced to 13.218 inches for 16 inch stud spacing and 15.231 inches for 24 inch stud spacing. Actual cavity depth is 3.5 inch for 2x4, 5.5 inch for 2x6, 7.25 inch for 2x8, 9.25 inch for 2x10, and 11.25 inch for 2x12. High density R-30 insulation is assumed to be 8.5 inch thick batt and R-38 is assumed to be 10.5 inch thick. The thickness of the stucco is assumed to be reduced to 3/8 inch when continuous insulation is applied.

Table 4.3.4 – U-factors of Metal Framed Walls for Residential Construction

				Rated R-value of Continuous Insulation [2]									
Spacing	**Cavity Insulation R-Value:**	**Nominal Framing Size**		**R-0**	**R-2**	**R-4**	**R-5**	**R-6**	**R-7**	R-8	R-10	R-12	R-15
				A	**B**	**C**	**D**	**E**	**F**	G	H	I	J
16 in. OC	None	Any	**1**	0.455	0.238	0.161	0.139	0.122	0.109	0.098	0.082	0.070	0.058
	R-05	2x4	**2**	0.252	0.165	0.124	0.110	0.099	0.090	0.083	0.071	0.062	0.052
	R-11	2x4	**3**	0.200	0.137	0.107	0.097	0.088	0.081	0.075	0.065	0.058	0.049
	R-13	2x4	**4**	0.192	0.132	0.105	0.095	0.087	0.080	0.074	0.064	0.057	0.049
	R-15	2x4	**5**	0.186	0.129	0.102	0.093	0.085	0.078	0.073	0.063	0.056	0.048
	R-19	2x6	**6**	0.154	0.112	0.092	0.084	0.077	0.072	0.067	0.059	0.053	0.046
	R-20	2x6	7	0.151	0.112	0.091	0.084	0.077	0.072	0.067	0.059	0.053	0.046
	R-21[1]	2x6	8	0.151	0.110	0.090	0.083	0.076	0.071	0.066	0.058	0.052	0.045
	R-19	2x8	9	0.134	0.102	0.085	0.078	0.072	0.067	0.063	0.056	0.050	0.044
	R-22	2x8	10	0.129	0.099	0.082	0.076	0.071	0.066	0.062	0.055	0.050	0.043
	R-25	2x8	11	0.125	0.096	0.081	0.075	0.069	0.065	0.061	0.054	0.049	0.043
	R-30[1]	2x8	12	0.120	0.093	0.078	0.073	0.068	0.063	0.060	0.053	0.048	0.042
	R-30	2x10	13	0.109	0.086	0.073	0.068	0.064	0.060	0.057	0.051	0.046	0.041
	R-38[1]	2x10	14	0.104	0.082	0.071	0.066	0.062	0.058	0.055	0.050	0.045	0.040
	R-38	2 x 12	15	0.095	0.077	0.067	0.062	0.059	0.055	0.053	0.048	0.043	0.038
24 in. OC	None	Any	16	0.449	0.236	0.161	0.138	0.121	0.108	0.098	0.082	0.070	0.058
	R-05	2x4	17	0.243	0.161	0.122	0.108	0.098	0.089	0.082	0.070	0.062	0.052
	R-11	2x4	18	0.189	0.131	0.104	0.094	0.086	0.079	0.073	0.064	0.057	0.048
	R-13	2x4	19	0.181	0.127	0.101	0.092	0.084	0.078	0.072	0.063	0.056	0.048
	R-15	2x4	20	0.175	0.123	0.099	0.090	0.082	0.076	0.071	0.062	0.055	0.047
	R-19	2x6	21	0.144	0.107	0.088	0.081	0.075	0.070	0.065	0.058	0.052	0.045
	R-20	2x6	22	0.141	0.106	0.087	0.080	0.074	0.069	0.065	0.057	0.051	0.044
	R-21[1]	2x6	23	0.141	0.105	0.086	0.080	0.074	0.069	0.064	0.057	0.051	0.044
	R-19	2x8	24	0.126	0.097	0.081	0.075	0.070	0.065	0.061	0.055	0.049	0.043
	R-22	2x8	25	0.121	0.094	0.079	0.073	0.068	0.064	0.060	0.054	0.048	0.042
	R-25	2x8	26	0.117	0.091	0.077	0.071	0.067	0.063	0.059	0.053	0.048	0.042
	R-30[1]	2x8	27	0.112	0.088	0.075	0.069	0.065	0.061	0.057	0.052	0.047	0.041
	R-30	2x10	28	0.102	0.081	0.070	0.065	0.061	0.058	0.055	0.049	0.045	0.039
	R-38[1]	2x10	29	0.096	0.077	0.067	0063	0.059	0.056	0.053	0.048	0.044	0.039
	R-38	2 x 12	30	0.088	0.072	0.063	0.059	0.056	0.053	0.050	0.046	0.042	0.037

Notes

1. Higher density fiberglass batt is required in these cases.
2. Continuous insulation may be installed on either the inside or the exterior of the wall, or both.

This table contains U-factors for steel or metal framed walls in low-rise residential buildings where the thickness of the framing members is 18 gauge or thinner. Table 4.3.3 in Reference Joint Appendix JA4 must be used for steel-framed or metal-framed walls in nonresidential buildings (including high-rise residential buildings and hotels and motels) and in low rise residential buildings if the thickness of the framing members are thinner than 18 gauge.

If continuous insulation is not used, then choices are made from Column A. In this case, the insulation is installed only in the cavity between the framing members. When continuous insulation is used, it is typically installed on the exterior side of the wall, but can also be used on

the inside. The continuous insulation is typically a rigid polystyrene or polyisocyanurate foam insulation.

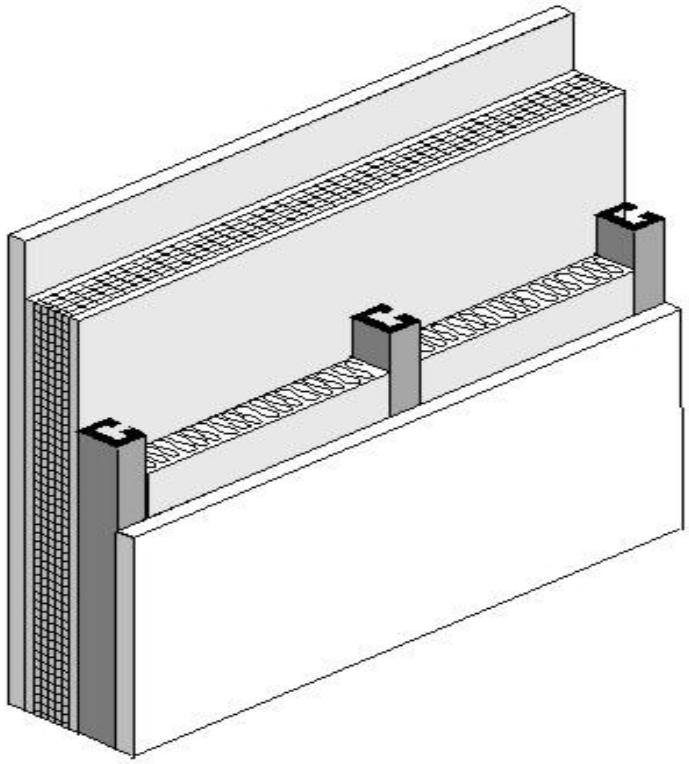

Figure 4.3.4 – Metal Framed Wall

When this table is used manually, the R-value of continuous insulation shall be equal to or greater than the R-value published in the continuous insulation columns. No interpolation is permitted when data from the table is used manually. Commission approved compliance software programs, however, may determine the U-factor for any amount of continuous insulation or for unusual construction assemblies using Equation 4-1 and Equation 4-2.

Assumptions: Values in this table were calculated using the zone calculation method. The construction assembly assumes an exterior air film of R-0.17, a 7/8 inch layer of siding or stucco averaging R-0.18, building paper of R-0.06 (BP01), continuous insulation (if any), the insulation / framing insulation layer, 1/2 inch gypsum of R-0.45 gypsum board (GP01), and an interior air film 0.68. The framing factor is assumed to be 25 percent for 16 inch stud spacing and 22 percent for 24 inch spacing. To account for the increased wall framing percentage, the frame spacing input to the EZ Frame program is reduced to 13.218 inches for 16 inch stud spacing and 15.231 inches for 24 inch stud spacing. The stud web thickness is assumed to be 0.038 inches, which is a 50/50 mix of 18 gauge and 20 gauge C-channel studs. This value was confirmed to be representative of low-rise residential construction by polling several California-based light-gauge steel structural engineers and light-gauge steel framers. Actual cavity depth is 3.5 inch for 2x4, 5.5 inch for 2x6, 8 inch for 2x8, 10 inch for 2x10, and 12 inches for 2x12. High density R-30 insulation is assumed to be 8.5 inch thick batt and R-38 is assumed to be 10.5 inches thick. The thickness of the stucco is assumed to be reduced to 3/8 inch when continuous insulation is applied.

Table 4.3.5 – Properties of Hollow Unit Masonry Walls

Thickness	Type					Partly Grouted with Ungrouted Cells					
			Solid Grout			Empty			Insulated		
	Type		A			B			C		
		1	U-factor	C-factor	HC	U-factor	C-factor	HC	U-factor	C-factor	HC
12"	LW CMU	**2**	0.51	0.90	23	0.43	0.68	14.8	0.30	0.40	14.8
	MW CMU	**3**	0.54	1.00	23.9	0.46	0.76	15.6	0.33	0.46	15.6
	NW CMU	**4**	0.57	1.11	24.8	0.49	0.84	16.5	0.36	0.52	16.5
10"	LW CMU	**5**	0.55	1.03	18.9	0.46	0.76	12.6	0.34	0.48	12.6
	MW CMU	**6**	0.59	1.18	19.7	0.49	0.84	13.4	0.37	0.54	13.4
	NW CMU	**7**	0.62	1.31	20.5	0.52	0.93	14.2	0.41	0.63	14.2
8"	LW CMU	**8**	0.62	1.31	15.1	0.50	0.87	9.9	0.37	0.54	9.9
	MW CMU	**9**	0.65	1.45	15.7	0.53	0.96	10.5	0.41	0.63	10.5
	NW CMU	**10**	0.69	1.67	16.3	0.56	1.07	11.1	0.44	0.70	11.1
	Clay Unit	**11**	0.57	1.11	15.1	0.47	0.78	11.4	0.39	0.58	11.4
6"	LW CMU	**12**	0.68	1.61	10.9	0.54	1.00	7.9	0.44	0.70	7.9
	MW CMU	**13**	0.72	1.86	11.4	0.58	1.14	8.4	0.48	0.81	8.4
	NW CMU	**14**	0.76	2.15	11.9	0.61	1.27	8.9	0.52	0.93	8.9
	Clay Unit	**15**	0.65	1.45	11.1	0.52	0.93	8.6	0.45	0.73	8.6

The walls addressed in this table are rarely used in residential construction, but are common in some types of nonresidential construction. The tables include four types of hollow masonry units: lightweight concrete masonry units (CMU), medium weight CMU, normal weight CMU, and hollow clay masonry units. ASTM C-90 defines these masonry products in more detail.

Masonry used in California must be reinforced to withstand wind loads and earthquakes. This is achieved by installing reinforcing steel and grouting the cells in both a vertical and horizontal direction. Since grouting the cells affects thermal performance, data is provided for three cases: where every cell is grouted, where the cells are partially grouted and the remaining cells are left empty, and where the cells are partially grouted and the remaining cells are filled with perlite or some other insulating material.

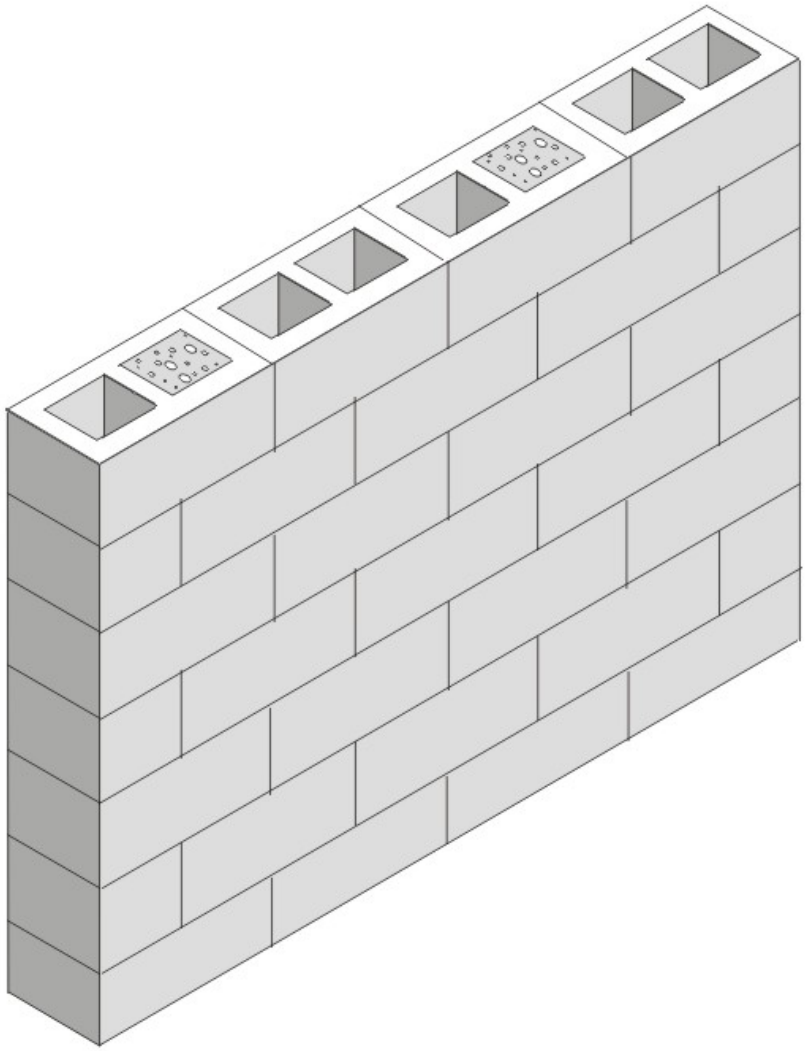

Figure 4.3.5 – Masonry Wall

For each of these conditions the U-factor, C-factor and heat capacity (HC) is published. There are other properties of mass materials that may be needed in compliance calculations, but these values can be determined from the published data using the procedures in Modeling Constructions in the Nonresidential compliance software and in Section 4.6 of this document.

Assumptions: Data is taken from *Energy Calculations and Data*, CMACN, 1986, Berkeley Solar Group; Concrete Masonry Association of California and Nevada. The density of the CMU material (not counting the grouted or hollow cells) is 105 lb/ft³ for lightweight, 115 lb/ft³ for medium weight and 125 lb/ft³ for normal weight. The density of the clay unit material is 130 lb/ft³. For all four types of masonry units, data is provided for thicknesses of 6 in., 8 in., 10 in., and 12 in. For the partially grouted cases, vertical cells are assumed to be grouted at 32 inch on center. Reinforcing in the horizontal direction is at 48 in. on center. Wall thicknesses given in the table are nominal; actual thicknesses are 3/8 in. less. Insulating material inside unit masonry hollow is assumed to be perlite.

Table 4.3.6 – Properties of Solid Unit Masonry and Solid Concrete Walls

			Wall Thickness, inches									
			3	**4**	**5**	**6**	**7**	**8**	**9**	**10**	**11**	**12**
Type	**Property**		**A**	**B**	**C**	**D**	**E**	**F**	**G**	**H**	**I**	**J**
LW CMU	U-Factor	**1**	0.79	0.71	0.65	0.59	0.54	0.51	0.47	0.44	0.42	0.39
	C-Factor		2.38	1.79	1.43	1.18	1.01	0.88	0.79	0.71	0.65	0.59
	HC		5.3	7.00	8.80	10.50	12.30	14.00	15.80	17.50	19.30	21.00
MW CMU	U-Factor	**2**	0.84	0.77	0.70	0.65	0.61	0.57	0.53	0.50	0.48	0.45
	C-Factor		2.94	2.22	1.75	1.47	1.25	1.10	0.98	0.88	0.80	0.74
	HC		5.80	7.70	9.60	11.5	13.40	15.30	17.30	19.20	21.10	23.00
NW CMU	U-Factor	**3**	0.88	0.82	0.76	0.71	0.67	0.63	0.60	0.56	0.53	0.51
	C-Factor		3.57	2.70	2.17	1.79	1.54	1.35	1.20	1.03	0.98	0.90
	HC		6.30	8.30	10.40	12.50	14.6	16.70	18.80	20.80	22.90	25.00
Clay Brick	U-Factor	**4**	0.80	0.72	0.66	na	na	na	na	na	na	na
	C-Factor		2.50	1.86	1.50	na	na	na	na	na	na	na
	HC		6.30	8.40	10.43	na	na	na	na	na	na	na
Concrete	U-Factor	**5**	0.96	0.91	0.86	0.82	0.78	0.74	0.71	0.68	0.65	0.63
	C-Factor		5.22	4.02	3.20	2.71	2.31	1.99	1.79	1.61	1.45	1.36
	HC		7.20	9.60	12.00	14.40	16.80	19.20	21.60	24.00	26.40	28.80

This table provides thermal performance information for solid masonry units and solid concrete walls.

The walls addressed in this table are rarely used in residential construction, but are common in some types of nonresidential construction.

There are other properties of mass materials that may be needed in compliance calculations, but these values can be determined from the published data using the procedures in Modeling Constructions in the Nonresidential compliance software and in Section 4.6 of this document.

When insulation is added to the outside of masonry walls and/or when the inside is furred and insulated, the performance data in this table may be adjusted using Equation 4-4 and Equation 4-5 in coordination with Table 4.3.14.

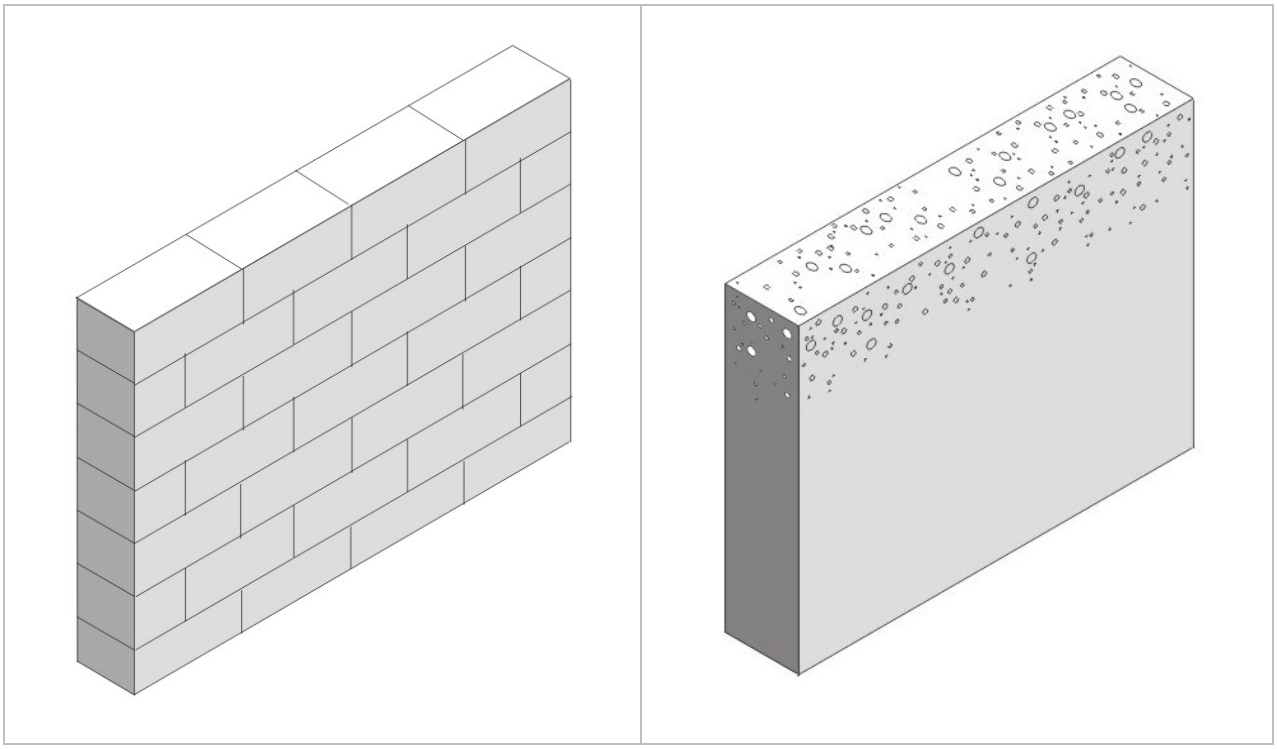

Figure 4.3.6 – Solid Unit Masonry (left) and Solid Concrete (right) Walls

Assumptions: Data is taken from ASHRAE/IESNA Standard 90.1-2004. The density of the CMU material is 105 lb/ft³ for lightweight, 115 lb/ft³ for medium weight and 125 lb/ft³ for normal weight. The density of the clay unit material is 130 lb/ft³ and the density of the concrete is 144 lb/ft³. For all five types of masonry walls, the U-factor, C-factor and heat capacity (HC) is provided for thicknesses of 3 inch, 4 inch, and 5 inch ASTM C-90 provides more information on the classification of masonry walls.

Table 4.3.7 – Properties of Concrete Sandwich Panels

Percent Concrete Web	Steel Penetrates Insulation	Performance Factor		Insulation Thickness (R-value)				
				1.5 (7.0)	**2.0 (9.3)**	**3.0 (14.0)**	**4.0 (18.6)**	**6.0 (27.9)**
				A	**B**	**C**	**D**	**E**
0%	No	U-factor	**1**	0.122	0.095	0.066	0.051	0.034
		C-factor		0.136	0.104	0.070	0.053	0.035
		HC		16.13	16.13	16.13	16.13	16.13
	Yes	U-factor	**2**	0.164	0.128	0.091	0.070	0.048
		C-factor		0.190	0.144	0.099	0.074	0.050
		HC		16.13	16.13	16.13	16.13	16.13
10%	No	U-factor	**3**	0.476	0.435	0.345	0.286	0.217
		C-factor		0.800	0.690	0.488	0.377	0.267
		HC		16.53	16.66	16.93	17.20	17.74
	Yes	U-factor	**4**	0.500	0.435	0.357	0.303	0.227
		C-factor		0.870	0.690	0.513	0.408	0.282
		HC		16.53	16.66	16.93	17.20	17.74
20%	No	U-factor	**5**	0.588	0.556	0.476	0.417	0.333
		C-factor		1.176	1.053	0.800	0.645	0.465
		HC		16.93	17.20	17.74	18.28	19.35
	Yes	U-factor	**6**	0.588	0.556	0.476	0.417	0.333
		C-factor		1.176	1.053	0.800	0.645	0.465
		HC		16.93	17.20	17.74	18.28	19.35

This table provides U-factors, C-factors, and heat capacity (HC) data for concrete sandwich panels. Concrete sandwich panels, as the name suggests, consist of two layers of concrete that sandwich a layer of insulation. The wall system can be constructed in the field or in a factory. One method of field construction is where the wall panels are formed in a flat position using the concrete floor slab of the building as the bottom surface. After the panel has set, it is hoisted with a crane into its final vertical position.

Both the percent of concrete web and the percent steel are factors in determining the thermal performance of walls. The insulation layer in this type of concrete sandwich panel generally does not extend over the entire surface of the wall. To provide structural integrity, a certain portion of the wall is solid concrete, which ties together the two concrete layers. This portion is known as the concrete web. The thermal performance of concrete sandwich panels depends on the percent of the wall that is concrete web. Data is provided for concrete webs representing 0 percent, 10 percent and 20 percent of the opaque wall surface. In some cases, the concrete layers are tied together by structural steel that penetrates the insulation layer. Data is provided for the case where this steel is present and for cases where it is not.

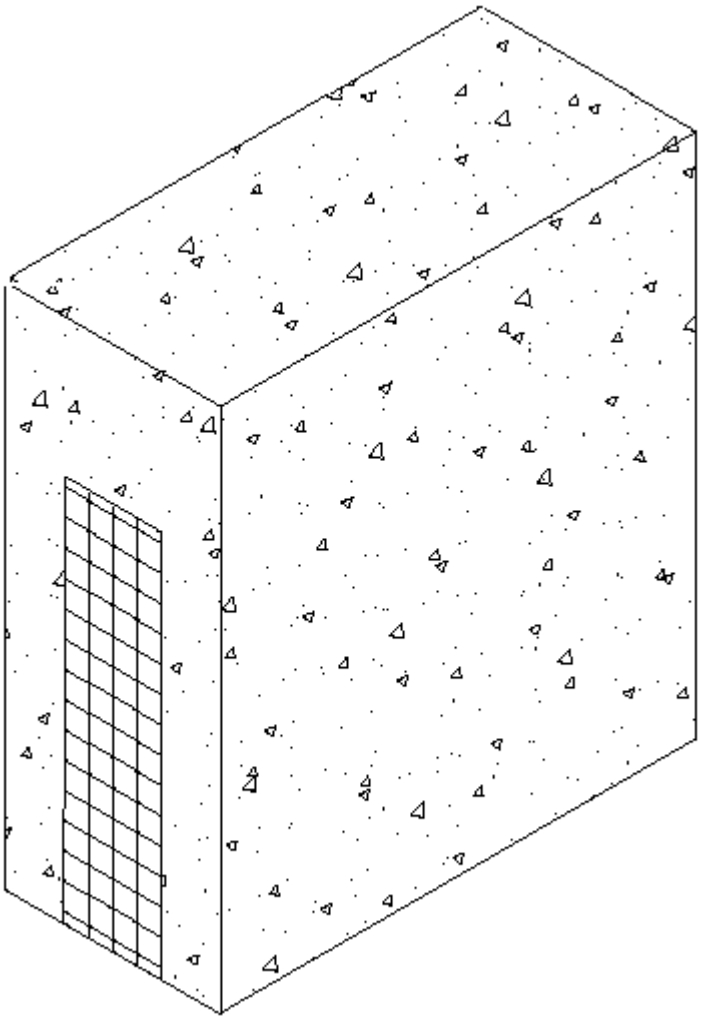

Figure 4.3.7 – Concrete Sandwich Panel

Other properties of mass materials such as density, conductivity, specific heat and wall weight may be needed in compliance calculations and these properties may be determined from the published data in Table 4.3.7 using the procedures in Modeling Constructions in the Nonresidential compliance software and in Section 4.6 of this document.

Values from this table may be combined with values from Table 4.3.14 when a furring layer is added to the inside of the wall and/or continuous insulation is added to the outside of the wall. Adjustments for additional layers shall follow the procedure of Equation 4-4 and Equation 4-5.

Assumptions: U-factors include an inside air film of 0.68 and an exterior air film of 0.17. Conductivity of the concrete is assumed to be 0.215 Btu/h-ºF-f, density is 150 lb/ft^3, the thickness of each side of the sandwich panel is 0.5 ft. The data was calculated by Construction Technologies Laboratories, Inc. and published in the Thermal Mass Handbook, Concrete and Masonry Design Provisions Using ASHRAE/IESNA 90.1-1989, National Codes and Standards Council of the Concrete and Masonry Industries, 1994.

Table 4.3.8 – U-factors for Spandrel Panels and Curtain Walls

			Rated R-value of Insulation between Framing Members							
			None	R-4	R-7	R-10	R-15	R-20	R-25	R-30
Frame Type	**Spandrel Panel**		**A**	**B**	**C**	**D**	**E**	**F**	**G**	**H**
Aluminum without Thermal Break	Single glass pane, stone, or metal panel	**1**	0.445	0.285	0.259	0.247	0.236	0.230	0.226	0.224
	Double glass with no low-e coatings	**2**	0.356	0.273	0.254	0.244	0.234	0.229	0.226	0.223
	Triple or low-e glass	**3**	0.313	0.263	0.249	0.241	0.233	0.228	0.225	0.223
Aluminum with Thermal Break	Single glass pane, stone, or metal panel	**4**	0.429	0.243	0.212	0.197	0.184	0.176	0.172	0.169
	Double glass with no low-e coatings	**5**	0.328	0.228	0.205	0.193	0.182	0.175	0.171	0.168
	Triple or low-e glass	**6**	0.277	0.217	0.199	0.189	0.180	0.174	0.170	0.167
Structural Glazing	Single glass pane, stone, or metal panel	**7**	0.428	0.217	0.180	0.161	0.145	0.136	0.130	0.126
	Double glass with no low-e coatings	**8**	0.316	0.199	0.172	0.157	0.143	0.135	0.129	0.126
	Triple or low-e glass	**9**	0.257	0.186	0.165	0.152	0.140	0.133	0.128	0.125
No framing or Insulation is Continuous	Single glass pane, stone, or metal panel	**10**	0.445	0.160	0.108	0.082	0.058	0.045	0.037	0.031
	Double glass with no low-e coatings	**11**	0.356	0.147	0.102	0.078	0.056	0.044	0.036	0.030
	Triple or low-e glass	**12**	0.313	0.139	0.098	0.076	0.055	0.043	0.035	0.030
Frame Type	**Curtain Wall**									
Aluminum without Thermal Break	Single glass pane, stone, or metal panel	**13**	1.224	0.929	0.427	0.372	0.347	0.326	0.315	0.308
	Double glass with no low-e coatings	**14**	0.727	0.611	0.400	0.361	0.341	0.323	0.313	0.307
	Triple or low-e glass	**15**	0.567	0.494	0.380	0.351	0.335	0.320	0.311	0.306
Aluminum with Thermal Break	Single glass pane, stone, or metal panel	**16**	1.110	0.862	0.339	0.282	0.256	0.234	0.222	0.215
	Double glass with no low-e coatings	**17**	0.617	0.531	0.311	0.270	0.249	0.230	0.220	0.214
	Triple or low-e glass	**18**	0.458	0.409	0.290	0.260	0.243	0.227	0.218	0.212
Structural Glazing	Single glass pane, stone, or metal panel	**19**	1.106	0.859	0.290	0.228	0.199	0.175	0.162	0.154
	Double glass with no low-e coatings	**20**	0.577	0.502	0.260	0.215	0.192	0.171	0.160	0.152
	Triple or low-e glass	**21**	0.407	0.368	0.237	0.204	0.185	0.168	0.158	0.151
No framing or Insulation is Continuous	Single glass pane, stone, or metal panel	**22**	1.224	0.929	0.197	0.124	0.090	0.062	0.047	0.038
	Double glass with no low-e coatings	**23**	0.727	0.611	0.177	0.116	0.086	0.060	0.046	0.038
	Triple or low-e glass	**24**	0.567	0.494	0.166	0.111	0.083	0.059	0.045	0.037

This table has U-factors for the spandrel section of glass and other curtain wall systems. Design factors that affect performance are the type of framing, the type of spandrel panel and the R-value of insulation.

Four framing conditions are considered in the table. The first is the common case where standard aluminum mullions are used. Standard mullions provide a thermal bridge through the insulation, reducing its effectiveness. The second case is for metal framing members that have a thermal break. A thermal break frame uses a urethane or other non-metallic element to separate the metal exposed to outside conditions from the metal that is exposed to interior conditions. The

third case is for structural glazing or systems where there is no exposed mullion on the interior. The fourth case is for the condition where there is no framing or the insulation is continuous and uninterrupted by framing. The columns in the table can be used for any specified level of insulation between framing members installed in framed curtain walls or spandrel panels.

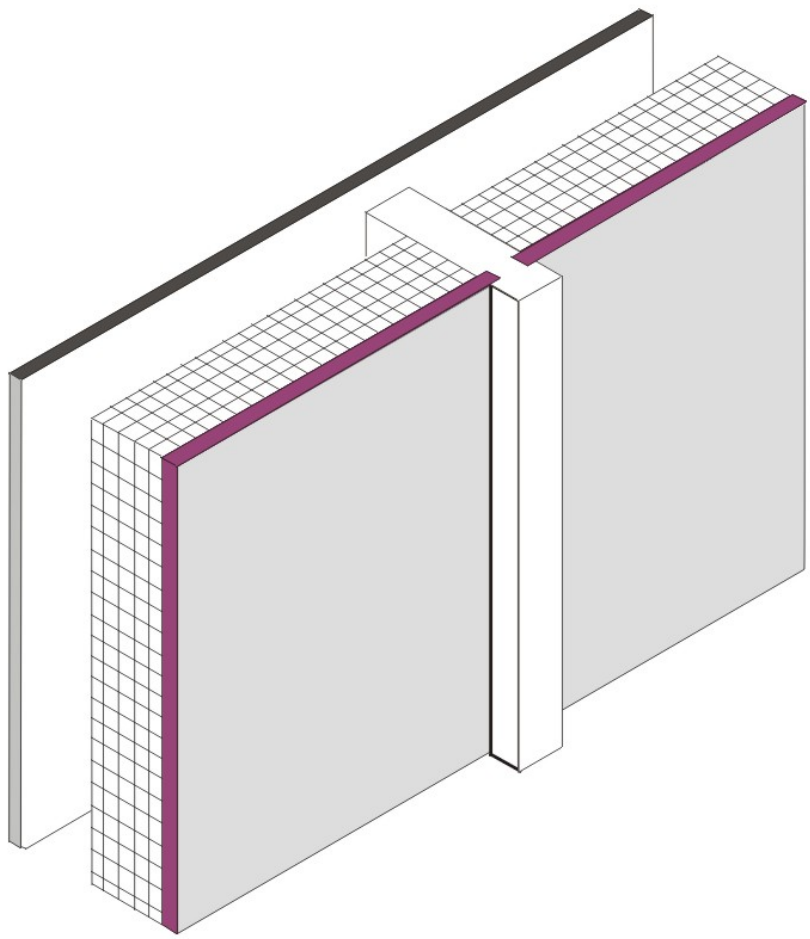

Figure 4.3.8 – Spandrel Panel

There are three cases considered in the table. To determine an appropriate thermal performance value the assumption used to differenciate between spandrel panels and curtain walls is that spandrel panels include an air gap and rigid backing, while curtain walls do not. The first is for a panel that provides little or no insulating value. This includes single pane glass, stone veneer, metal panels, or pre-case concrete less than 2 inches thick. The second case is for insulating glass. Sometimes insulating glass is used so that the spandrel panel looks similar to the vision glass. The third case is for triple glass or double glass that has a low-e coating.

Insulation levels are shown in the columns of the table. When the table is used manually, the R-value of insulation shall be equal to or greater than the R-value published in the columns. No interpolation is permitted when data from the table is selected manually. California Energy Commission approved compliance software programs, including those used for prescriptive compliance, may accurately account for any amount of continuous insulation or for unusual construction assemblies using Equation 4-1 and Equation 4-2. If the curtain wall has an insulated

metal-framed wall on the inside, then values from this table may be combined with values from Table 4.3.4 or Table 4.3.14 using the procedures of Equation 4-2 or Equation 4-3.

Assumptions: The U-factors in Table 4.3.8 were derived from a regression analysis of the values for "Glass Only Center of Glass" and "Curtain Wall" in the 2009 ASHRAE Handbook of Fundamentals, Chapter 15, Table 4, with adaptions to update the values. The U-factors in Table 4.3.8 for curtain walls include an exterior air film with an R-value of 0.17 and an interior air film R-value of 0.68, which are accounted for in the values from the 2009 ASHRAE Handbook of Fundamentals. For spandrel panels the construction assembly includes an air gap with an R-value of 1.39 (3/4 inch gap, 50 ºF mean temperature and 30 ºF temperature difference), and includes 5/8 inch gypsum board with an R-value of 0.56 that provides the interior finish. The gypsum board is assumed to span between the window sill and a channel at the floor.

Table 4.3.9 – U-factors for Metal Building Walls

Insulation System	Rated R-Value of Insulation		Continuous Rigid Insulation							
			None	R-2	R-4	R-6	R-7	R-8	R-10	R-14
			A	B	C	D	E	F	G	H
Single Layer of Batt Insulation	None	**1**	1.18	0.351	0.206	0.146	0.127	0.113	0.092	0.067
	R-6	**2**	0.184	0.135	0.106	0.087	0.080	0.074	0.065	0.051
	R-10	**3**	0.134	0.106	0.087	0.074	0.069	0.065	0.057	0.047
	R-11	**4**	0.123	0.099	0.082	0.071	0.066	0.062	0.055	0.045
	R-13	**5**	0.113	0.092	0.078	0.067	0.063	0.059	0.053	0.044
Double Layer of Batt Insulation	R-6 + R-13	**6**	0.07	0.061	0.055	0.049	0.047	0.045	0.041	0.035
	R-10 + R-13	**7**	0.061	0.054	0.049	0.045	0.043	0.041	0.038	0.033
	R-13 + R-13	**8**	0.057	0.051	0.046	0.042	0.041	0.039	0.036	0.032
	R-19 + R-13	**9**	0.048	0.044	0.040	0.037	0.036	0.035	0.032	0.029

Double layer or batt insulation may not be able to have continuous rigid insulation added.

The U-factors in this table are intended for use with metal building walls. This type of construction is typical for manufacturing and warehouse facilities, but is used for other building types as well. The typical method of insulating this type of building is to stretch vinyl backed fiberglass insulation over the metal girts before the metal siding is attached with metal screws. With this method, the insulation is compressed at each girt, reducing its effectiveness. The first part of the table contains values for this insulation technique. The second section of the table has data for systems that have two layers of insulation. In this section layers are listed from inside to outside.

For the majority of cases, values will be selected from column A of this table. Builders or designers may increase thermal performance by adding a rigid continuous insulation layer between the metal siding and the structural supports. When this table is used manually, the R-value of continuous insulation shall be equal to or greater than the R-value published in the continuous insulation columns. No interpolation is permitted when data from the table is used manually. Energy Commission approved compliance software, however, may determine the U-factor for any amount of continuous insulation using Equation 4-1.

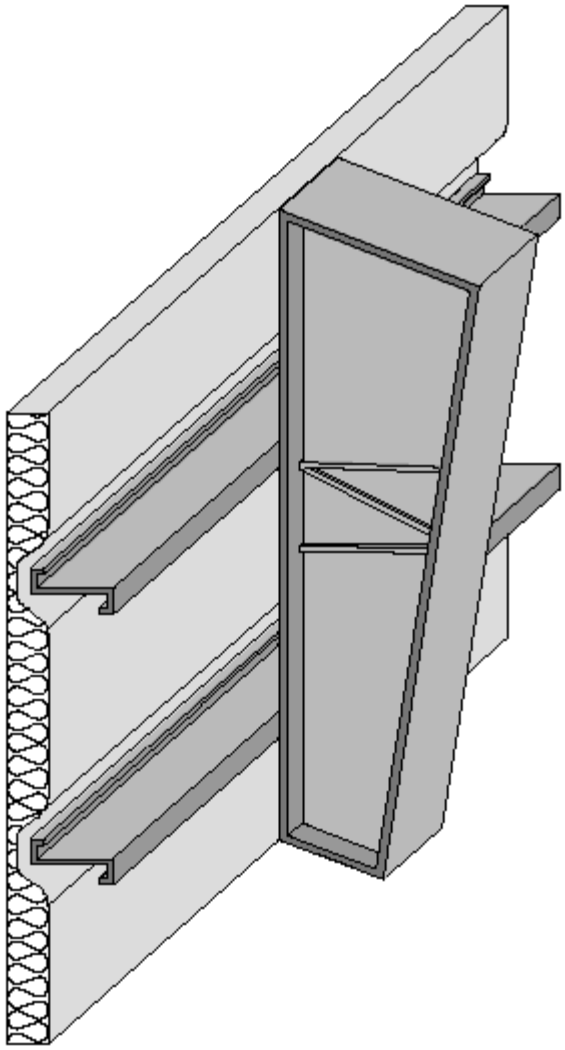

Figure 4.3.9 – Metal Building Wall

Assumptions: Data in Column A of this table is taken from the ASHRAE/IESNA Standard 90.1-2004, Appendix A. The data in columns beyond A are calculated using Equation 4-1.

Table 4.3.10 – U-factors for Insulated Metal Panel Walls

		U-factor (Btu/^{0}F-ft^2)
Panel Thickness		**A**
2”	**1**	0.078
2 ½”	**2**	0.063
3”	**3**	0.053
4”	**4**	0.041
5”	**5**	0.033
6”	**6**	0.027

This table contains thermal performance data (U-factors) for foamed-in-place, insulated metal panels consisting of liquid polyurethane or polyisocyanurate injected between metal skins in individual molds or on fully automated production lines. Metal building construction is the most common application for this product where the metal panel is fastened to the frame of the structure. This table can only be used for insulated panels that are factory built. This table does not apply to panels that utilize polystyrene, or to field applied products such as spray applied insulations.

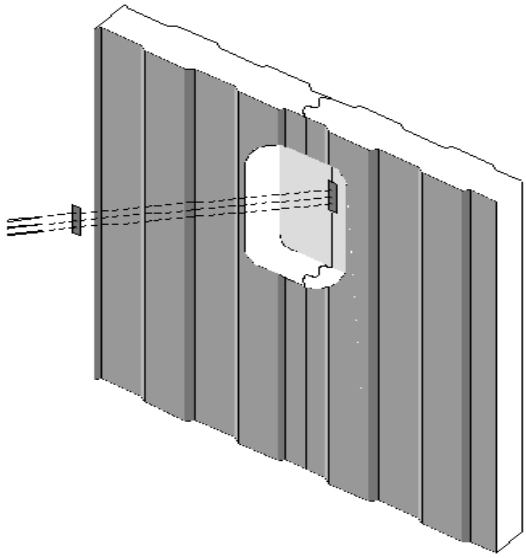

Figure 4.3.10 –Insulated Metal Panel Walls

Assumptions. These data are calculated using the parallel path method documented in the 2009 ASHRAE Handbook of Fundamentals. These calculations assume an exterior air film of R-0.17, light gauge metal exterior of 0.0747 inch thickness, continuous insulation R-5.9 per inch, light gauge metal interior of 0.0747 inch thickness, interior air film (heat flow horizontal) of R-0.68. The panels are assumed to be continuous with no framing penetration. The R-value of the metal is negligible.

Table 4.3.11 – Thermal Properties of Log Home Walls

		U-factor	Heat Capacity (HC)
Log Diameter		A	
6”	**1**	0.132	5.19
8”	**2**	0.102	6.92
10”	**3**	0.083	8.65
12”	**4**	0.070	10.37
14”	**5**	0.060	12.10
16”	**6**	0.053	13.83

This table has U-factors and heat capacity data for log homes Data is provided for logs in six thicknesses ranging from 6 in. to 16 in. If other thermal properties are needed such as density, weight, conductivity, etc., use the procedures in Modeling Constructions in the Nonresidential compliance software and contained in Section 4.6 of this document. Energy Commission approved Compliance Software Programs may adjust the data for interior furring using data from Table 4.3.14 and the procedure from Equation 4-2.

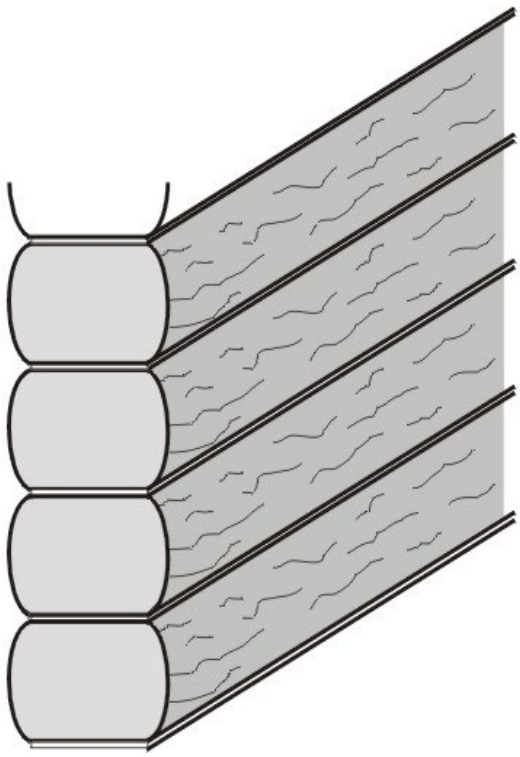

Figure 4.3.11 – Log Home Walls

Assumptions: Calculations are based on ASHRAE series method of calculation, 2009 ASHRAE Handbook of Fundamentals. Values assume a log R-value of R-1.25/inch, an average wall thickness of 90 percent of the log diameter, an interior air film of R-0.68 and an exterior air film of R-0.17. Values do not account for presence of windows or doors. Construction assumes no additional siding or insulation. Heat Capacity is based on a softwood density of 26.6 lb/ft^3 and a specific heat of 0.39 Btu/lb-ºF. An exterior air film of R-0.17 and an interior film of R-0.68 are assumed.

Table 4.3.12 – Thermal and Mass Properties of Straw Bale Walls

		A
R-value	**1**	30
U-factor		0.033
Heat Capacity Btu/ft²*°F]		6.34

This table has data that may be used for straw bale construction. This is an alternative construction technique used in some rural areas. The technique is not commonly used for production homes.

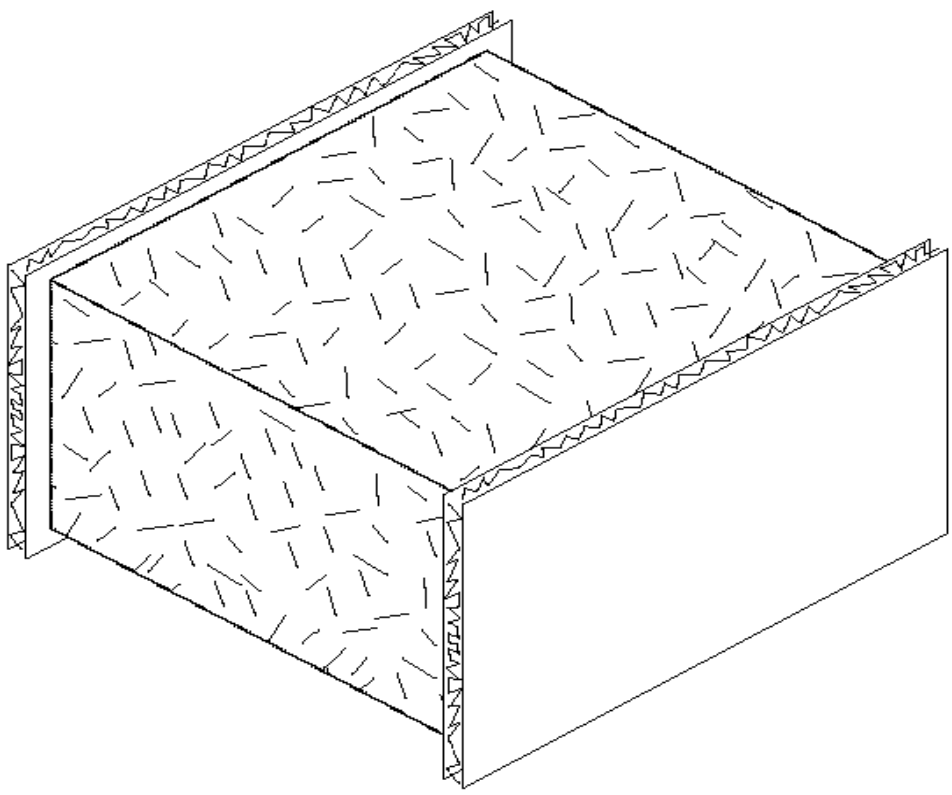

Figure 4.3.12 – Straw Bale Wall

Assumptions: The construction consists of an exterior film of R-0.17, stucco and lath of R-0.18, the straw bale, interior plaster of R-0.47, and an interior air film of 0.68. Straw bale must have a minimum cross section of 22 inch by 16 inch, and shall have a thermal resistance of R-30, whether stacked so the walls are 22 inch wide or 16 inch wide. Due to the higher resistance to heat flow across the grain of the straws, a bale laid on edge with a nominal 16 inch horizontal thickness has the same R-value (R-30) as a bale laid flat. Framing is assumed to not penetrate more than 25 percent of the way through the straw bale.

Table 4.3.13 – Thermal Properties of Insulating Concrete Forms

Insulation Type	Insulation Thickness Per Side (Total R-Value)	Performance Factor		Flat[1]					Waffle Grid[2]		Screen Grid[2]
				Concrete Core Thickness (inches)							
				4	6	8	10	12	6	8	6
				A	B	C	D	E	F	G	H
EPS[3]	2.0 (15.4)	U-factor	1	0.058	0.057	0.056	0.055	0.055	0.047	0.039	0.041
		HC		12.20	17.00	21.80	26.60	31.40	13.90	15.87	12.10
	2.25 (18.9)	U-factor	2	0.052	0.051	0.051	0.050	0.050	0.043	0.036	0.038
		HC		12.22	17.02	21.82	26.62	31.42	13.92	15.89	12.11
	2.5 (19.25)	U-factor	3	0.047	0.047	0.046	0.046	0.045	0.040	0.034	0.036
		HC		12.24	17.04	21.84	26.64	31.44	13.94	15.91	12.13
	2.625 (20.2)	U-factor	4	0.045	0.045	0.044	0.044	0.043	0.038	0.033	0.035
		HC		12.25	17.05	21.85	26.65	31.45	13.95	15.92	12.14
	2.75 (21.2)	U-factor	5	0.043	0.043	0.042	0.042	0.042	0.037	0.032	0.0323
		HC		12.26	17.06	21.86	26.66	31.46	13.96	15.92	12.15
	3.0 (23.1)	U-factor	6	0.040	0.040	0.039	0.039	0.039	0.0334	0.030	0.031
		HC		12.27	17.07	21.87	26.67	31.47	13.98	15.94	12.17
	3.5 (27.0)	U-factor	7	0.035	0.034	0.034	0.034	0.034	0.030	0.027	0.028
		HC		12.31	17.11	21.91	26.71	31.51	14.01	15.98	12.21
	4.0 (30.8)	U-factor	8	0.031	0.030	0.030	0.030	0.030	0.027	0.024	0.025
		HC		12.35	17.15	21.95	26.75	31.55	14.05	16.02	12.24
XPS	2.0 (20.0)	U-factor	9	0.045	0.045	0.045	0.044	0.044	NA	NA	NA
		HC		12.29	17.09	21.89	26.69	31.49	NA	NA	NA
	2.5 (25.0)	U-factor	10	0.037	0.037	0.036	0.036	0.036	NA	NA	NA
		HC		12.35	17.15	21.95	26.75	31.55	NA	NA	NA
	2.625 (26.3)	U-factor	11	0.035	0.035	0.035	0.035	0.034	NA	NA	NA
		HC		12.36	17.16	21.96	26.76	31.56	NA	NA	NA
	2.75 (27.5)	U-factor	12	0.034	0.034	0.033	0.033	0.033	NA	NA	NA
		HC		12.38	17.18	21.98	26.78	31.58	NA	NA	NA
	3.0 (30.0)	U-factor	13	0.031	0.031	0.031	0.031	0.030	NA	NA	NA
		HC		12.41	17.21	22.01	26.81	31.61	NA	NA	NA
	3.5 (35.0)	U-factor	14	0.027	0.027	0.027	0.027	0.026	NA	NA	NA
		HC		12.46	17.26	22.06	26.86	31.66	NA	NA	NA
	4.0 (40)	U-factor	15	0.024	0.024	0.024	0.023	0.023	NA	NA	NA
		HC		12.52	17.32	22.12	26.92	31.72	NA	NA	NA
Polyurethane	1.5 (9.09)	U-factor	16	0.050	0.049	0.049	0.048	0.048	NA	NA	NA
		HC		12.23	17.03	21.83	26.63	31.43	NA	NA	NA
	2.0 (10.9)	U-factor	17	0.042	0.042	0.041	0.041	0.041	NA	NA	NA
		HC		12.41	17.21	22.01	26.81	31.61	NA	NA	NA
	4.5 (20.95)	U-factor	18	0.023	0.023	0.023	0.022	0.022	NA	NA	NA
		HC		12.58	17.38	22.18	26.98	31.78	NA	NA	NA
Cement/EPS Compound	2.0 (12.0)	U-factor	19	NA	NA	NA	NA	NA	0.059	0.048	0.052
		HC		NA	NA	NA	NA	NA	16.49	18.46	14.69
	3.0 (18.0)	U-factor	20	NA	NA	NA	NA	NA	0.043	0.037	0.040
		HC		NA	NA	NA	NA	NA	17.50	19.47	15.69
	4.0 (24.0)	U-factor	21	NA	NA	NA	NA	NA	0.034	0.031	0.032
		HC		NA	NA	NA	NA	NA	18.51	20.47	16.70

Notes:

1. Flat Insulated Concrete Forms utilizes rigid insulation as the form and do not use cement compound as the form.
2. Waffle and screen type Insulated Concrete Forms typically utilize either a cement/EPS compound or EPS insulation as the form. ICF's using the cement/EPS compound do not utilize rigid insulation added to the interior and exterior surfaces.
3. 1.5 lb density EPS insulation at R-3.85 per inch except for the 2.25" insulation thickness which uses 2.0 lb density EPS at R-4.2 per inch.

This table provides thermal performance information for insulating concrete forms.

Insulating Concrete Forms (ICFs) are concrete forming systems that use stay-in-place panels made from a variety of insulating materials for constructing cast-in-place solid concrete walls. There are three basic types of ICFs: flat wall, waffle-grid and screen-grid. A flat wall system is a wall with uniform thickness just like a conventional poured wall made with plywood or metal forms. Waffle-grid wall systems have a solid concrete wall of varying thickness and look like a

breakfast waffle. Screen grid wall systems also known as , “post and beam”, have a perforated concrete wall of varying thickness similar to the waffle type wall systems but with a solid form material between the horizontal and vertical members instead of concrete. The insulating panels for all three ICF types are most commonly made from expanded polystyrene (EPS) and extruded polystyrene (XPS) rigid insulation boards. Plastic or metal cross-ties separate the insulating panels and provide structural integrity during the pour. The ICF system is modular and stackable with interlocking edges. The materials can be delivered as pre-assembled blocks or as planks that require the flanges and web to be assembled during construction.

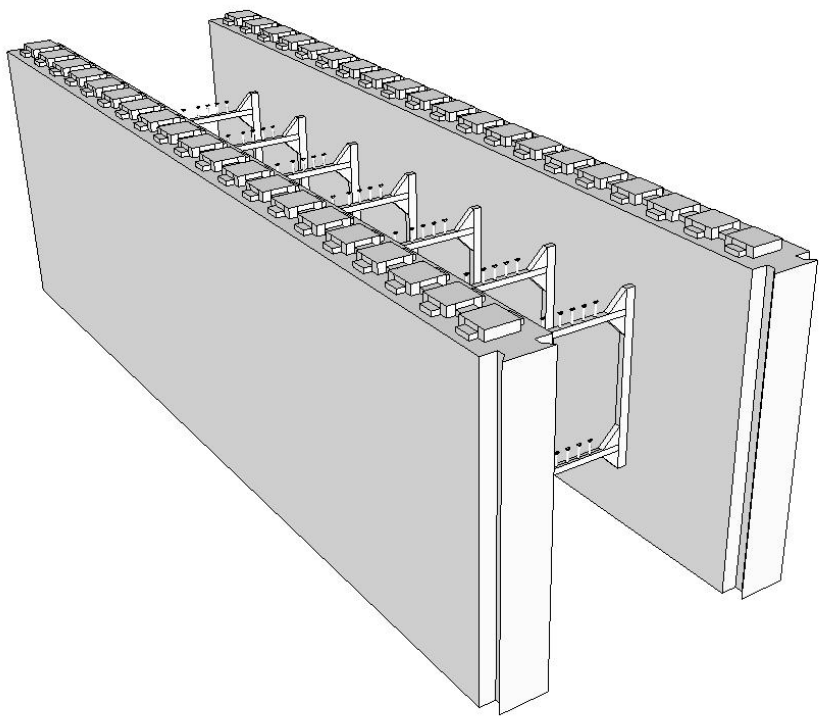

Figure 4.3.13 – Insulating Concrete Forms

Assumptions: Values in this table were calculated using the one dimensional calculation method documented in 2009 ASHRAE Handbook of Fundamentals. The calculations assume an exterior air film of R-0.17, a 7/8 inch layer of stucco of R-0.18, building paper of R-0.06, an exterior insulating form of varying resistance, a concrete core of varying thickness at R-0.11 per inch, an interior insulating form of varying resistance, and an interior air film of R-0.68. The R-value of the cement/EPC compound is assumed to be R-3.0 per inch, the XPS insulation assumed to be R-5.0 per inch, and the polyurethane assumed to be aged and dried in 1.5 inch, 2.0 inch, and 4.5 inch thickness.

Table 4.3.14 – Effective R-values for Interior or Exterior Insulation Layers

			R-value of Insulation Installed in Furring Space																					
			0	1	2	3	4	5	6	7	8	9	10	11	12	13	14	15	16	17	18	19	20	21
Thick-ness	Frame Type		A	B	C	D	E	F	G	H	I	J	K	L	M	N	O	P	Q	R	S	T	U	V
Any	None	**1**	0.5	1.5	2.5	3.5	4.5	5.5	6.5	7.5	8.5	9.5	10.5	11.5	12.5	13.5	14.5	15.5	16.5	17.5	18.5	19.5	20.5	21.5
0.5"	Wood	**2**	1.3	1.3	1.9	2.4	2.7	n.a.	n.a.	n.a.	n.a.	n.a.	n.a.	n.a.	n.a.	n.a.	n.a.	n.a.	n.a.	n.a.	n.a.	n.a.	n.a.	n.a.
	Metal	**3**	0.9	0.9	1.1	1.1	1.2	n.a.	n.a.	n.a.	n.a.	n.a.	n.a.	n.a.	n.a.	n.a.	n.a.	n.a.	n.a.	n.a.	n.a.	n.a.	n.a.	n.a.
0.75"	Wood	**4**	1.4	1.4	2.1	2.7	3.1	3.5	3.8	n.a.	n.a.	n.a.	n.a.	n.a.	n.a.	n.a.	n.a.	n.a.	n.a.	n.a.	n.a.	n.a.	n.a.	n.a.
	Metal	**5**	1.0	1.0	1.3	1.4	1.5	1.5	1.6	n.a.	n.a.	n.a.	n.a.	n.a.	n.a.	n.a.	n.a.	n.a.	n.a.	n.a.	n.a.	n.a.	n.a.	n.a.
1.0"	Wood	**6**	1.3	1.5	2.2	2.9	3.4	3.9	4.3	4.6	4.9	n.a.	n.a.	n.a.	n.a.	n.a.	n.a.	n.a.	n.a.	n.a.	n.a.	n.a.	n.a.	n.a.
	Metal	**7**	1.0	1.1	1.4	1.6	1.7	1.8	1.8	1.9	1.9	n.a.	n.a.	n.a.	n.a.	n.a.	n.a.	n.a.	n.a.	n.a.	n.a.	n.a.	n.a.	n.a.
1.5"	Wood	**8**	1.3	1.5	2.4	3.1	3.8	4.4	4.9	5.4	5.8	6.2	6.5	6.8	7.1	n.a.	n.a.	n.a.	n.a.	n.a.	n.a.	n.a.	n.a.	n.a.
	Metal	**9**	1.1	1.2	1.6	1.9	2.1	2.2	2.3	2.4	2.5	2.5	2.6	2.6	2.7	n.a.	n.a.	n.a.	n.a.	n.a.	n.a.	n.a.	n.a.	n.a.
2"	Wood	**10**	1.4	1.5	2.5	3.3	4.0	4.7	5.3	5.9	6.4	6.9	7.3	7.7	8.1	8.4	8.7	9.0	9.3	n.a.	n.a.	n.a.	n.a.	n.a.
	Metal	**11**	1.1	1.2	1.7	2.1	2.3	2.5	2.7	2.8	2.9	3.0	3.1	3.2	3.2	3.3	3.3	3.4	3.4	n.a.	n.a.	n.a.	n.a.	n.a.
2.5"	Wood	**12**	1.4	1.5	2.5	3.4	4.2	4.9	5.6	6.3	6.8	7.4	7.9	8.4	8.8	9.2	9.6	10.0	10.3	10.6	10.9	11.2	11.5	n.a.
	Metal	**13**	1.2	1.3	1.8	2.3	2.6	2.8	3.0	3.2	3.3	3.5	3.6	3.6	3.7	3.8	3.9	3.9	4.0	4.0	4.1	4.1	4.1	n.a.
3"	Wood	**14**	1.4	1.5	2.5	3.5	4.3	5.1	5.8	6.5	7.2	7.8	8.3	8.9	9.4	9.9	10.3	10.7	11.1	11.5	11.9	12.2	12.5	12.9
	Metal	**15**	1.2	1.3	1.9	2.4	2.8	3.1	3.3	3.5	3.7	3.8	4.0	4.1	4.2	4.3	4.4	4.4	4.5	4.6	4.6	4.7	4.7	4.8
3.5"	Wood	**16**	1.4	1.5	2.6	3.5	4.4	5.2	6.0	6.7	7.4	8.1	8.7	9.3	9.8	10.4	10.9	11.3	11.8	12.2	12.6	13.0	13.4	13.8
	Metal	**17**	1.2	1.3	2.0	2.5	2.9	3.2	3.5	3.8	4.0	4.2	4.3	4.5	4.6	4.7	4.8	4.9	5.0	5.1	5.1	5.2	5.2	5.3
4"	Wood	**18**	1.4	1.6	2.6	3.6	4.5	5.3	6.1	6.9	7.6	8.3	9.0	9.6	10.2	10.8	11.3	11.9	12.4	12.8	13.3	13.7	14.2	14.6
	Metal	**19**	1.2	1.3	2.0	2.6	3.0	3.4	3.7	4.0	4.2	4.5	4.6	4.8	5.0	5.1	5.2	5.3	5.4	5.5	5.6	5.7	5.8	5.8
4.5"	Wood	**20**	1.4	1.6	2.6	3.6	4.5	5.4	6.2	7.1	7.8	8.5	9.2	9.9	10.5	11.2	11.7	12.3	12.8	13.3	13.8	14.3	14.8	15.2
	Metal	**21**	1.2	1.3	2.1	2.6	3.1	3.5	3.9	4.2	4.5	4.7	4.9	5.1	5.3	5.4	5.6	5.7	5.8	5.9	6.0	6.1	6.2	6.3
5"	Wood	**22**	1.4	1.6	2.6	3.6	4.6	5.5	6.3	7.2	8	8.7	9.4	10.1	10.8	11.5	12.1	12.7	13.2	13.8	14.3	14.8	15.3	15.8
	Metal	**23**	1.2	1.4	2.1	2.7	3.2	3.7	4.1	4.4	4.7	5.0	5.2	5.4	5.6	5.8	5.9	6.1	6.2	6.3	6.5	6.6	6.7	6.8
5.5"	Wood	**24**	1.4	1.6	2.6	3.6	4.6	5.5	6.4	7.3	8.1	8.9	9.6	10.3	11.0	11.7	12.4	13.0	13.6	14.2	14.7	15.3	15.8	16.3
	Metal	**25**	1.3	1.4	2.1	2.8	3.3	3.8	4.2	4.6	4.9	5.2	5.4	5.7	5.9	6.1	6.3	6.4	6.6	6.7	6.8	7.0	7.1	7.2
EIFS		**26**	0.0	1.0	2.0	3.0	4.0	5.0	6.0	7.0	8.0	9.0	10.0	11.0	12.0	13.0	14.0	15.0	16.0	17.0	18.0	19.0	20.0	21.0

Metal Clips **Wood Framing**

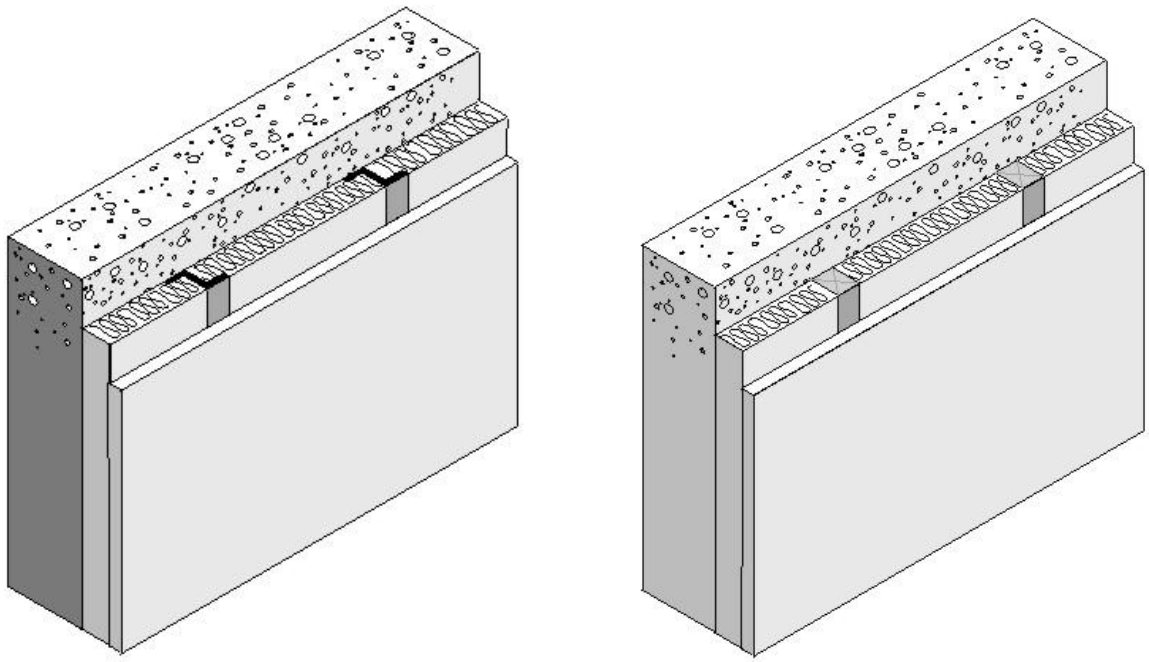

Figure 4.3.14 – Interior or Exterior Insulation Layers

This table is used in combination with other tables and Equation 4-1 and Equation 4-2 to account for interior furring and continuous insulation added to other constructions.

Assumptions: Data is taken from ASHRAE/IESNA Standard 90.1-2004 All furring thickness values given are actual dimensions. All values include 0.5 inch gypsum board on the inner surface, interior surface resistances not included. The metal furring is 24 inch on center, 24 gauge, Z-type Metal Furring. The wood furring is 24 inch on center, Douglas-Fir Larch Wood Furring, density = 34.9 lb/ft^3. Insulation assumed to fill the furring space.

4.4 Floors and Slabs

Table 4.4.1 – Standard U-factors for Wood-Framed Floors with a Crawl Space

Framing Spacing	Nominal Framing Size	R-Value Cavity Insul.		Rated R-value of Continuous Insulation							
				R-0	R-2	R-4	R-6	R-7	R-8	R-10	R-14
				A	B	C	D	E	F	G	H
16 in. OC	Any	None	1	0.097	0.081	0.070	0.061	0.058			
	2 x 6								0.055	0.049	0.041
		R-11	2	0.049	0.045	0.041	0.038	0.037	0.035	0.033	0.029
		R-13	3	0.046	0.042	0.039	0.036	0.035	0.033	0.031	0.028
		R-19	4	0.037	0.034	0.032	0.030	0.029	0.029	0.027	0.024
	2 x 8	R-19	5	0.037	0.034	0.032	0.030	0.029	0.029	0.027	0.024
		R-22	6	0.034	0.032	0.030	0.028	0.027	0.027	0.025	0.023
	2 x 10	R-25	7	0.031	0.029	0.028	0.026	0.025	0.025	0.024	0.022
		R-30	8	0.028	0.026	0.025	0.024	0.023	0.023	0.022	0.020
	2 x 12	R-38	9	0.024	0.023	0.022	0.021	0.020	0.020	0.019	0.018
24 in. OC	Any	None	10	0.098	0.082	0.070	0.062	0.058			
	2 x 6								0.055	0.049	0.041
		R-11	11	0.049	0.045	0.041	0.038	0.036	0.035	0.033	0.029
		R-13	12	0.045	0.041	0.038	0.035	0.034	0.033	0.031	0.028
		R-19	13	0.037	0.034	0.032	0.030	0.029	0.028	0.027	0.024
	2 x 8	R-19	14	0.036	0.034	0.032	0.030	0.029	0.028	0.027	0.024
		R-22	15	0.033	0.031	0.029	0.028	0.027	0.026	0.025	0.023
	2 x 10	R-25	16	0.030	0.029	0.027	0.026	0.025	0.024	0.023	0.021
		R-30	17	0.027	0.026	0.024	0.023	0.023	0.022	0.021	0.020
	2 x 12	R-38	18	0.023	0.022	0.021	0.020	0.020	0.020	0.019	0.017

Notes:

1. In order to use the U-factors listed in this section, exterior raised-floor insulation shall be installed between floor joists with a means of support that prevents the insulation from falling, sagging or deteriorating. Two approaches that accomplish this are:
2. Nailing insulation hangers 18 inches apart prior to rolling out the insulation. Hangers are heavy wires up to 48 inches long with pointed ends, which provide positive wood penetration.
3. Attaching wire mesh to form a basket between joists to support the insulation. Mesh is nailed or stapled to the underside of the joists.

This table contains U-factors for wood framed floors built over a ventilated crawlspace. This construction is common for low-rise residential buildings and for Type IV nonresidential buildings.

If continuous insulation is not used, then choices are made from Column A. In this case, the insulation is installed only between the framing members. Continuous insulation is not common for wood floors over a crawlspace, but if credit is taken, the insulation may be installed either above or below the framing members. The continuous insulation is typically a rigid polystyrene or polyisocyanurate foam insulation.

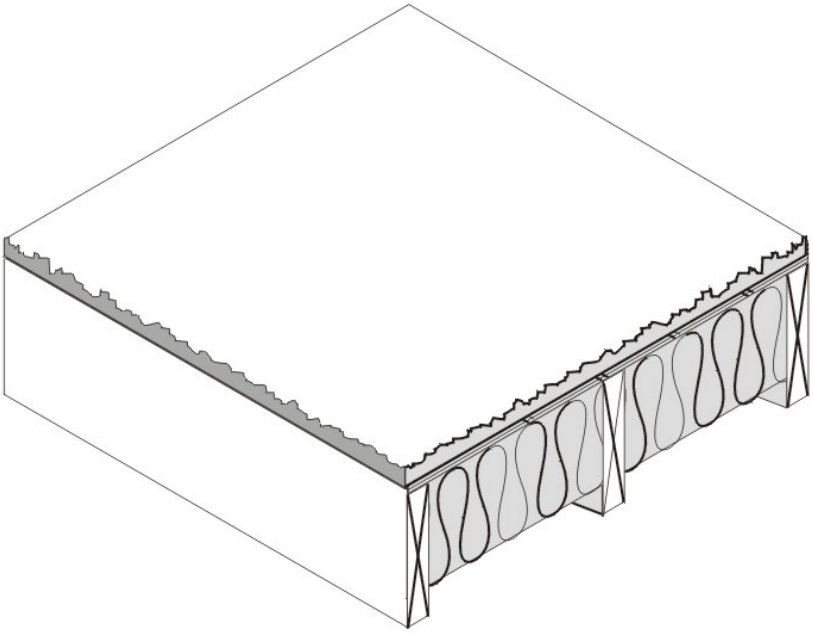

Figure 4.4.1 – Wood Framed Floor with a Crawl Space

When this table is used manually, the R-value of continuous insulation shall be equal to or greater than the R-value published in the continuous insulation columns. Continuous insulation of at least R-2 must exist in order to use columns B and beyond. No interpolation is permitted when data from the table is used manually. Commission approved compliance software, however, may determine the U-factor for any amount of continuous insulation or for unusual construction assemblies using Equation 4-1 and Equation 4-2.

If the crawlspace is not ventilated and is modeled as a controlled ventilation crawlspace (CVC), then values from this table shall not be used. Values from Table 4.21 shall be used instead and the crawlspace shall be modeled as a separate and unconditioned zone.

Assumptions: Calculations use the ASHRAE parallel heat flow method documented in the 2005 ASHRAE Handbook of Fundamentals. These calculations assume an exterior air film of R-0.17, a vented crawlspace for an effective R-6, a continuous insulation layer (if any), the insulation / framing layer, 5/8 inch wood based sheathing (Custom), carpet and pad of R-2.08 (CP01), and an interior air film (heat flow down) of R-0.92. The framing factor is assumed to be 10 percent for 16 inch stud spacing and 7 percent for 24 inch spacing.

Table 4.4.2 – Standard U-factors for Wood Framed Floors without a Crawl Space

				Rated R-value of Continuous Insulation							
	Nominal Framing	R-Value of Cavity		R-0	R-2	R-4	R-6	R-7	R-8	R-10	R-14
Spacing	Size	Insul.		A	B	C	D	E	F	G	H
16 in. OC	Any	None	**1**	0.238	0.161	0.122	0.098	0.089	0.082	0.070	0.055
	2 x 6	R-11	**2**	0.071	0.062	0.055	0.050	0.047	0.045	0.041	0.036
	(5.50 in)	R-13	**3**	0.064	0.057	0.051	0.046	0.044	0.042	0.039	0.034
		R-19	**4**	0.049	0.044	0.040	0.037	0.036	0.035	0.032	0.028
	2 x 8	R-19	**5**	0.048	0.044	0.040	0.037	0.036	0.035	0.033	0.029
	(7.25 in.)	R-22	**6**	0.044	0.040	0.037	0.035	0.033	0.032	0.030	0.027
	2 x 10	R-25	**7**	0.039	0.036	0.034	0.031	0.030	0.030	0.028	0.025
	(9.25 in.)	R-30	**8**	0.034	0.032	0.030	0.028	0.028	0.027	0.025	0.023
	2 x 12	R-38	**9**	0.029	0.027	0.026	0.024	0.024	0.023	0.022	0.020
	(11.25 in.)										
24 in. OC	Any	None	**10**	0.243	0.163	0.123	0.099	0.090	0.083	0.071	0.055
	2 x 6	R-11	**11**	0.070	0.061	0.054	0.049	0.047	0.045	0.041	0.035
	(5.50 in.)	R-13	**12**	0.062	0.055	0.050	0.045	0.043	0.042	0.038	0.033
		R-19	**13**	0.047	0.043	0.039	0.037	0.035	0.034	0.032	0.028
	2 x 8	R-19	**14**	0.047	0.043	0.039	0.037	0.035	0.034	0.032	0.028
	(7.25 in.)	R-22	**15**	0.042	0.039	0.036	0.034	0.033	0.032	0.030	0.026
	2 x 10	R-25	**16**	0.037	0.035	0.033	0.031	0.030	0.029	0.027	0.025
	(9.25 in.)	R-30	**17**	0.033	0.031	0.029	0.027	0.027	0.026	0.025	0.022
	2 x 12	R-38	**18**	0.027	0.026	0.025	0.023	0.023	0.022	0.021	0.020
	(11.25 in.)										

This table contains U-factors for wood framed floors that are exposed to ambient (outdoor) conditions. This construction is common for low-rise residential buildings and for Type 4 nonresidential buildings.

If continuous insulation is not used, then choices are made from Column A. In this case, the insulation is installed only between the framing members. If credit is taken for continuous insulation, the insulation may be installed either above or below the framing members.

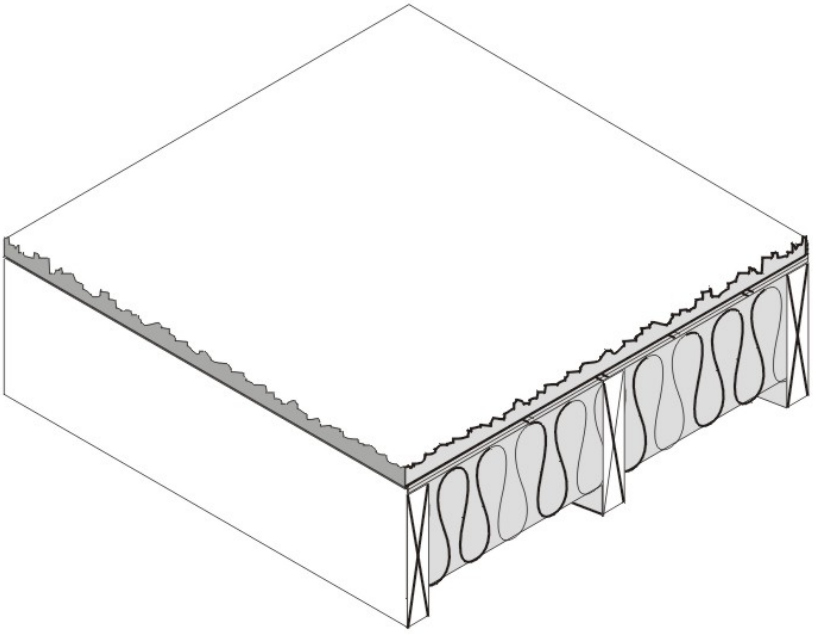

Figure 4.4.2 – Wood Framed Floor without a Crawl Space

When this table is used manually, the R-value of continuous insulation shall be equal to or greater than the R-value published in the continuous insulation columns. No interpolation is permitted when data from the table is used manually. Commission approved compliance software, however, may determine the U-factor for any amount of continuous insulation or for unusual construction assemblies using Equation 4-1 and Equation 4-2.

Assumptions: Calculations use the ASHRAE parallel heat flow method documented in the 2009 ASHRAE Handbook of Fundamentals. These calculations assume an exterior air film of R-0.17, a continuous insulation layer (if any), the cavity insulation / framing layer, 5/8 inch wood based sheathing (Custom), carpet and pad of R-2.08 (CP01), and an interior air film (heat flow down) of R-0.92.

Table 4.4.3 – Standard U-factors for Wood Foam Panel (SIP) Floors

Crawlspace	Insulation R-value[1]	Wood Framing Spline Connection Type (Splines)	Typical Panel Thickness		Rated R-value of Continuous Insulation [3]						
					None	R-2	R-4	R-6	R-7	R-8	R-10
					A	B	C	D	E	F	G
YES	R-22	Single 2x	6.5 in	1	0.033	0.030	0.029	0.027	0.026	0.026	0.024
	R-22	Double 2x	6.5 in	2	0.034	0.031	0.029	0.028	0.027	0.026	0.025
	R-22	I-Joist	6.5 in	3	0.032	0.030	0.028	0.027	0.026	0.025	0.024
	R-28	Single 2x	8.25 in	4	0.027	0.026	0.024	0.023	0.023	0.022	0.021
	R-28	Double 2x	8.25 in	5	0.028	0.026	0.025	0.024	0.023	0.023	0.022
	R-28	I-Joist	8.25 in	6	0.027	0.025	0.024	0.023	0.022	0.022	0.021
	R-33[2]	Single 2x	6.5 in	7	0.024	0.023	0.022	0.021	0.021	0.020	0.019
	R-33[2]	Double 2x	6.5 in	8	0.026	0.024	0.023	0.022	0.021	0.021	0.020
	R-33[2]	I-Joist	6.5 in	9	0.024	0.023	0.022	0.021	0.020	0.020	0.019
	R-36	Single 2x	10.25 in	10	0.023	0.022	0.021	0.020	0.019	0.019	0.018
	R-36	Double 2x	10.25 in	11	0.024	0.022	0.021	0.020	0.020	0.020	0.019
	R-36	I-Joist	10.25 in	12	0.022	0.021	0.020	0.019	0.019	0.019	0.018
NO	R-22	Single 2x	6.5 in	13	0.041	0.038	0.035	0.033	0.031	0.030	0.029
	R-22	Double 2x	6.5 in	14	0.043	0.039	0.036	0.034	0.032	0.031	0.029
	R-22	I-Joist	6.5 in	15	0.040	0.037	0.034	0.032	0.031	0.030	0.028
	R-28	Single 2x	8.25 in	16	0.033	0.030	0.029	0.027	0.026	0.026	0.024
	R-28	Double 2x	8.25 in	17	0.034	0.032	0.030	0.028	0.027	0.026	0.025
	R-28	I-Joist	8.25 in	18	0.032	0.030	0.028	0.027	0.026	0.025	0.024
	R-33[2]	Single 2x	6.5 in	19	0.029	0.027	0.026	0.024	0.024	0.023	0.022
	R-33[2]	Double 2x	6.5 in	20	0.032	0.029	0.027	0.026	0.025	0.024	0.023
	R-33[2]	I-Joist	6.5 in	21	0.028	0.027	0.025	0.024	0.023	0.023	0.022
	R-36	Single 2x	10.25 in	22	0.026	0.025	0.024	0.023	0.022	0.022	0.021
	R-36	Double 2x	10.25 in	23	0.028	0.026	0.025	0.024	0.023	0.022	0.021
	R-36	I-Joist	10.25 in	24	0.026	0.024	0.023	0.022	0.021	0.021	0.020

Notes:

1. The insulation R-value must be at least R-21.7 in order to use this table. This table assumes molded expanded polystyrene (EPS) unless noted otherwise. Although other insulation types are used by some SIP manufacturers, such as polyurethane and extruded expanded insulation (XPS), EPS is the most common insulation used in SIP construction.
2. R-33.2 is achievable using polyurethane insulation in 6.5" panels.
3. Continuous insulation shall be at least R-2 and may be installed on either the inside or the exterior of the roof/ceiling.

Structural insulated panels (SIPs) consist of a rigid insulation core, securely bonded between two structural facings, to form a structural sandwich panel. SIPs are considered a non-framed assembly usually with little or no structural framing that penetrates the insulation layer, resulting in less thermal bridging across the insulation when compared to a conventional framed assembly.

If continuous insulation is not used, then choices are made from Column A. When continuous insulation is also used, this is typically installed on the exterior side of the floor, but can also be used on the inside. The continuous insulation is typically a rigid polystyrene or polyisocyanurate foam insulation.

When this table is used manually, the R-value of continuous insulation shall be equal to or greater than the R-value published in the continuous insulation columns. Commission approved

compliance software, however, may determine the U-factor for any amount of continuous insulation or for unusual construction assemblies using Equation 4-1 and Equation 4-2.

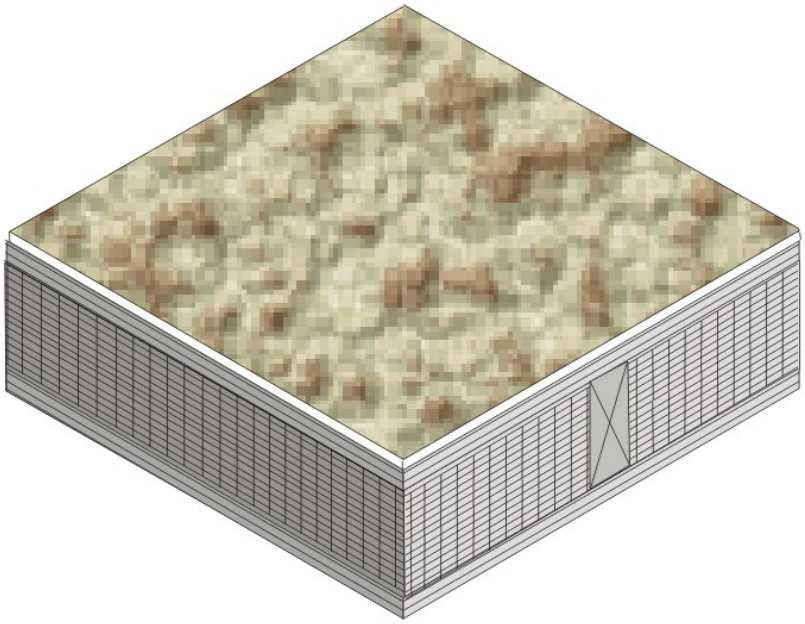

Figure 4.4.3 – Wood Foam Panel (SIP) Floor

Assumptions: These data are calculated using the parallel path method documented in the 2009 ASHRAE Handbook of Fundamentals. These calculations assume an exterior air film of R-0.17, a vented crawlspace of R-6, 7/16 inch of OSB at R-0.44, framing factor of 2%, 7/16 inch of OSB, carpet and pad of R-2.08 and an interior air film of R-0.92.

Table 4.4.4 – Standard U-factors for Metal-Framed Floors with a Crawl Space

Framing Spacing	Nominal Framing Size	Cavity Insulation R-Value:		Rated R-value of Continuous Insulation							
				R-0	R-2	R-4	R-6	R-7	R-8	R-10	R-14
				A	B	C	D	E	ºF	G	H
16 in. OC	Any	None	1	0.094	0.079	0.068	0.060	0.057	0.054	0.048	0.041
	2 x 6	R-11	2	0.065	0.058	0.052	0.047	0.045	0.043	0.039	0.034
		R-13	3	0.063	0.056	0.050	0.046	0.044	0.042	0.039	0.033
		R-19	4	0.059	0.053	0.048	0.044	0.042	0.040	0.037	0.032
	2 x 8	R-19	5	0.058	0.052	0.047	0.043	0.041	0.040	0.037	0.032
		R-22	6	0.056	0.050	0.046	0.042	0.040	0.039	0.036	0.031
	2 x 10	R-30	7	0.051	0.046	0.042	0.039	0.038	0.036	0.034	0.030
	2 x 12	R-38	8	0.048	0.044	0.040	0.037	0.036	0.035	0.032	0.029
24 in. OC	Any	None	9	0.094	0.079	0.068	0.060	0.057	0.054	0.048	0.041
	2 x 6	R-11	10	0.061	0.054	0.049	0.045	0.043	0.041	0.038	0.033
		R-13	11	0.058	0.052	0.047	0.043	0.041	0.040	0.037	0.032
		R-19	12	0.053	0.048	0.044	0.040	0.039	0.037	0.035	0.030
	2 x 8	R-19	13	0.051	0.046	0.042	0.039	0.038	0.036	0.034	0.030
		R-22	14	0.049	0.045	0.041	0.038	0.036	0.035	0.033	0.029
	2 x 10	R-30	15	0.045	0.041	0.038	0.035	0.034	0.033	0.031	0.028
	2 x 12	R-38	16	0.041	0.038	0.035	0.033	0.032	0.031	0.029	0.026

Notes:

In order to use the U-factors listed in this table, exterior raised-floor insulation shall be installed between floor joists with a means of support that prevents the insulation from falling, sagging or deteriorating. Two approaches that accomplish this are:

1. Attaching insulation hangers 18 inches apart prior to rolling out the insulation. Hangers are heavy wires up to 48 inches long with pointed ends.
2. Attaching wire mesh to form a basket between joists to support the insulation. Mesh is nailed or stapled to the underside of the joists.

This table contains U-factors for metal-framed floors built over a crawlspace. The constructions represented are similar to those in Table 4.4.1, except that wood framing is replaced with metal framing. Cavity insulation is installed between the framing members. Since the steel is not as large a cross section as wood, the insulation needs to be wider than that used with wood to fit in between the steel framing members.

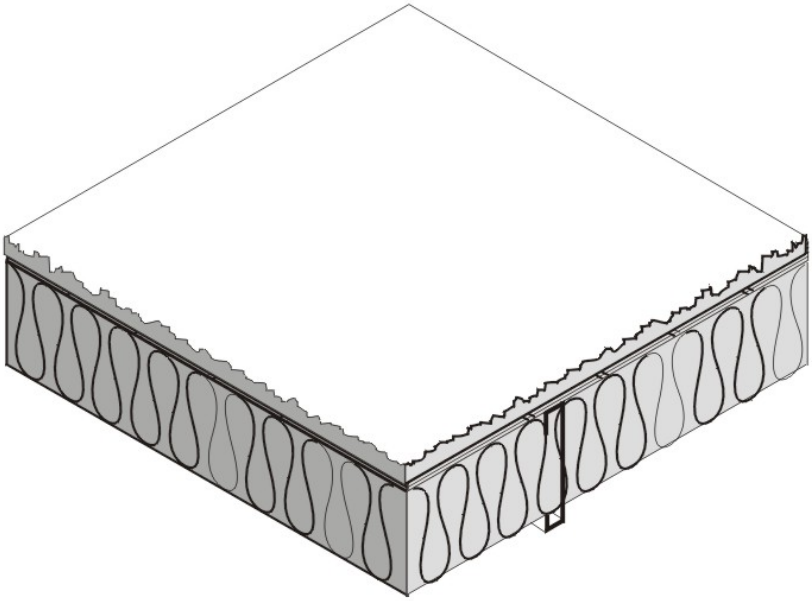

Figure 4.4.4 – Metal Framed Floors with a Crawl Space

For the majority of cases, values will be selected from column A of this table. Column A applies for the common situation where batt insulation is supported between framing members. Builders or designers may increase thermal performance by adding a continuous insulation layer either above or below the framing members.

When this table is used manually, the R-value of continuous insulation shall be equal to or greater than the R-value published in the continuous insulation columns. No interpolation is permitted when data from the table is used manually. Commission approved compliance software, however, may determine the U-factor for any amount of continuous insulation and for unusual construction layers using Equation 4-1 and Equation 4-2.

Assumptions: Calculations are based on the ASHRAE Zone Method Calculation, 2009 ASHRAE Handbook of Fundamentals These calculations assume an exterior air film of R-0.17, a vented crawlspace for an effective R-6, a continuous insulation layer (if any), the insulation / framing layer, 5/8 inch wood based sheathing (Custom), carpet and pad of R-2.08 (CP01), and an interior air film (heat flow down) of R-0.92. The effect of the crawlspace is approximated by an additional R-6 of insulation. The internal default framing percentages are 10 percent for 16 inch on center and 7 percent for 24 inch on center. Steel Framing has a 1.5 inch flange and is 0.075 inch thick steel (14 gauge) with no knockouts. U-factors are calculated using EZ frame 2.0.

Table 4.4.5 – Standard U-factors for Metal-Framed Floors without a Crawl Space

Spacing	Nominal Framing Size	Cavity Insulation R-Value		Rated R-value of Continuous Insulation							
				R-0	R-2	R-4	R-6	R-7	R-8	R-10	R-14
				A	B	C	D	E	F	G	H
16 in. OC	Any	None	**1**	0.253	0.168	0.126	0.100	0.091	0.084	0.072	0.056
	2 x 6	R-11	**2**	0.108	0.089	0.075	0.066	0.062	0.058	0.052	0.043
		R-13	**3**	0.102	0.085	0.072	0.063	0.060	0.056	0.050	0.042
		R-19	**4**	0.092	0.078	0.067	0.059	0.056	0.053	0.048	0.040
	2 x 8	R-19	**5**	0.088	0.075	0.065	0.058	0.054	0.052	0.047	0.039
		R-22	**6**	0.085	0.073	0.063	0.056	0.053	0.051	0.046	0.039
	2 x 10	R-30	**7**	0.075	0.065	0.058	0.052	0.049	0.047	0.043	0.037
	2 x 12	R-38	**8**	0.068	0.060	0.053	0.048	0.046	0.044	0.040	0.035
24 in. OC	Any	None	**9**	0.253	0.168	0.126	0.100	0.091	0.084	0.072	0.056
	2 x 6	R-11	**10**	0.095	0.080	0.069	0.061	0.057	0.054	0.049	0.041
		R-13	**11**	0.087	0.074	0.065	0.057	0.054	0.051	0.047	0.039
		R-19	**12**	0.077	0.067	0.059	0.053	0.050	0.048	0.044	0.037
	2 x 8	R-19	**13**	0.074	0.064	0.057	0.051	0.049	0.046	0.043	0.036
		R-22	**14**	0.07	0.061	0.055	0.049	0.047	0.045	0.041	0.035
	2 x 10	R-30	**15**	0.061	0.054	0.049	0.045	0.043	0.041	0.038	0.033
	2 x 12	R-38	**16**	0.054	0.049	0.044	0.041	0.039	0.038	0.035	0.031

Notes:

In order to use the U-factors listed in this section, exterior raised-floor insulation shall be installed between floor joists with a means of support that prevents the insulation from falling, sagging or deteriorating. Two approaches that accomplish this are:

1. Attaching insulation hangers 18 inches apart prior to rolling out the insulation. Hangers are heavy wires up to 48 inches long with pointed ends.
2. Attaching wire mesh to form a basket between joists to support the insulation. Mesh is nailed or stapled to the underside of the joists.

This table contains U-factors for metal-framed floors built over outdoor conditions. For the majority of cases, values will be selected from column A of this table. Column A applies for the common situation where batt insulation is supported between framing members. Builders or designers may increase thermal performance by adding a continuous insulation layer either above or below the framing members.

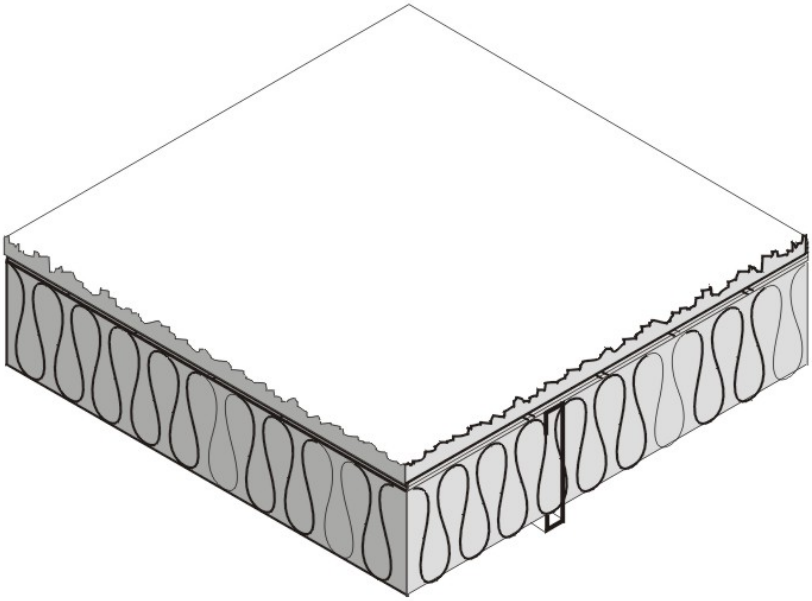

Figure 4.4.5 – Metal Framed Floors without a Crawl Space

When this table is used manually, the R-value of continuous insulation shall be equal to or greater than the R-value published in the continuous insulation columns. No interpolation is permitted when data from the table is used manually. Commission approved compliance software, however, may determine the U-factor for any amount of continuous insulation and for unusual construction layers using Equation 4-1 and Equation 4-2.

Assumptions: Calculations are based on the ASHRAE Zone Method Calculation, 2009 ASHRAE Handbook of Fundamentals Handbook. These calculations assume an exterior air film of R-0.17, a continuous insulation layer (if any), the insulation / framing layer, 5/8 inch wood based sheathing (Custom), carpet and pad of R-2.08 (CP01), and an interior air film (heat flow down) of R-0.92. The internal default framing percentages are 10 percent for 16 inch on center and 7 percent for 24 inch on center. Steel Framing has a 1.5 inch flange and is 0.075 inch thick steel with no knockouts. U-factors calculated using EZ frame 2.0.

Table 4.4.6 – Standard U-factors for Concrete Raised Floors

R-value of Insulation		Rated R-value of Continuous Insulation		
		Continuous Insulation Underneath	**Continuous Insulation Above Deck[1]** with no Sleepers	**Continuous Insulation Above Deck[1]** with Sleepers
		A	**B**	**C**
R-0	**1**	0.269	0.234	0.229
R-2	**2**	0.183	0.159	0.157
R-4	**3**	0.138	0.121	0.120
R-6	**4**	0.111	0.097	0.097
R-8	**5**	0.092	0.081	0.081
R-10	**6**	0.079	0.070	0.070
R-12	**7**	0.069	0.061	0.061
R-15	**8**	0.058	0.052	0.052
R-20	**9**	0.045	0.041	0.041
R-25	**10**	0.037	0.034	0.034
R-30	**11**	0.031	0.029	0.029

Notes:

1. Above deck case includes a 5/8 inch layer of plywood between the insulation and the carpet and pad.

This table may be used only if the HC of the proposed design floor is greater than or equal to 7.0 Btu/ft²-ºF.

Continuous Insulation Underneath **Continuous Insulation Above Deck**

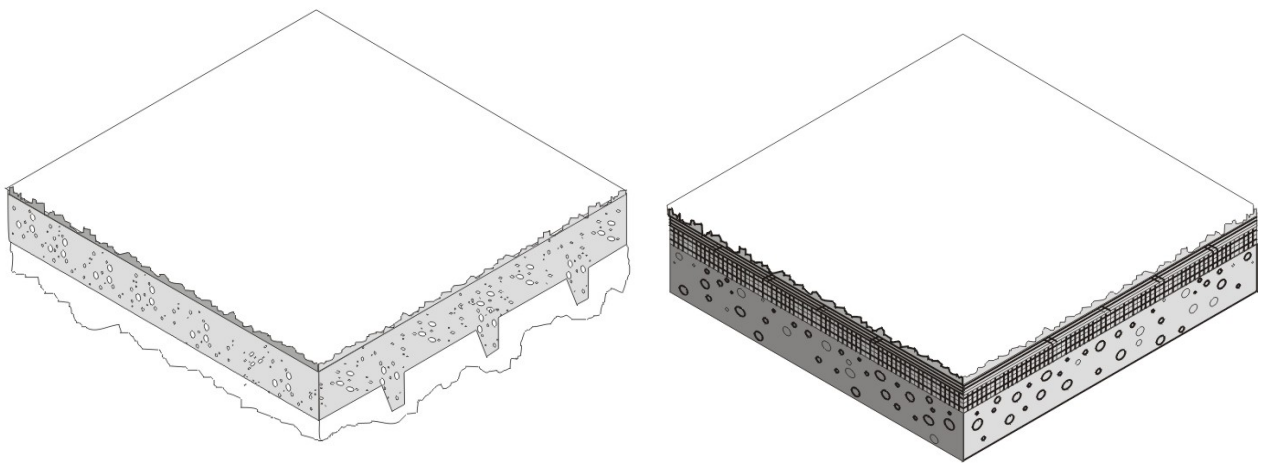

Figure 4.4.6 – Concrete Raised Floors

Assumptions: These calculations assume an exterior air film of R-0.17, a continuous insulation layer (if any), 4 inches of the lightweight concrete (CC14) over metal deck R-0, a continuous insulation layer (if any), 1.5 x 3.5 inch sleeper of R-0.99 per inch, R-0.80 air space between sleepers (2005 ASHRAE Handbook of Fundamentals, Chapter 25, Table 3), 5/8 inches of wood based sheathing (Custom) (if continuous insulation above deck), carpet and pad of R-2.08 (CP01), and an interior air film (heat flow down) of R-0.92. Sleepers have 10 percent framing factor. Below slab insulation assumes 6 inch wide beams 96 inches on center extending 8 inches below the slab.

Table 4.4.7 – F-Factors for Unheated Slab-on-Grade Floors

		Rated R-Value of Insulation												
Insulation Description		R-0	R-5	R-7.5	R-10	R-15	R-20	R-25	R-30	R-35	R-40	R-45	R-50	R-55
		A	**B**	**C**	**D**	**E**	**F**	**G**	**H**	**I**	**J**	**K**	**L**	**M**
None	**1**	0.73												
12 in. horizontal	**2**		0.72	0.71	0.71	0.71								
24 in. horizontal	**3**		0.70	0.70	0.70	0.69								
36 in. horizontal	**4**		0.68	0.67	0.66	0.66								
48 in. horizontal	**5**		0.67	0.65	0.64	0.63								
12 in. vertical	**6**		0.61	0.60	0.58	0.57	0.567	0.565	0.564					
24 in. vertical	**7**		0.58	0.56	0.54	0.52	0.510	0.505	0.502					
36 in. vertical	**8**		0.56	0.53	0.51	0.48	0.472	0.464	0.460					
48 in. vertical	**9**		0.54	0.51	0.48	0.45	0.434	0.424	0.419					
Fully insulated slab	**10**		0.46	0.41	0.36	0.30	0.261	0.233	0.213	0.198	0.186	0.176	0.168	0.161

Note: These values are used for slab edge conditions with and without carpet.

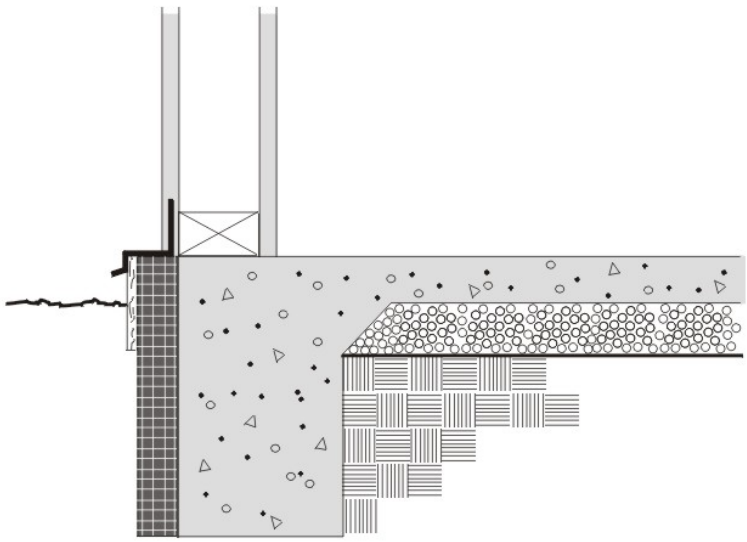

Figure 4.4.7 – Unheated Slab-on-Grade Floor

Horizontal insulation is continuous insulation that is applied directly to the underside of the slab and extends inward horizontally from the perimeter for the distance specified or continuous insulation that is applied downward from the top of the slab and then extends horizontally to the interior or the exterior from the perimeter for the distance specified. *Vertical insulation* is continuous insulation that is applied directly to the slab exterior, extending downward from the top of the slab for the distance specified. *Fully insulated slab* is continuous insulation that extends downward from the top to the slab and along the entire perimeter and completely covers the entire area under the slab.

Assumptions: Data of this table is taken from the ASHRAE/IESNA Standard 90.1-2004, Appendix A.

Table 4.4.8 – F-Factors for Heated Slab-on-Grade Floors

		Rated R-Value of Insulation												
		R-0	R-5	R-7.5	R-10	R-15	R-20	R-25	R-30	R-35	R-40	R-45	R-50	R-55
		A	B	C	D	E	F	G	H	I	J	K	L	M
None	**11**	1.35												
12 in. horizontal	**12**		1.31	1.31	1.30	1.30								
24 in. horizontal	**13**		1.28	1.27	1.26	1.25								
36 in. horizontal	**14**		1.24	1.21	1.20	1.18								
48 in. horizontal	**15**		1.20	1.17	1.13	1.11								
12 in. vertical	**16**		1.06	1.02	1.00	0.98	0.968	0.964	0.961					
24 in. vertical	**17**		0.99	0.95	0.90	0.86	0.843	0.832	0.827					
36 in. vertical	**18**		0.95	0.89	0.84	0.79	0.762	0.747	0.740					
48 in. vertical	**19**		0.91	0.85	0.78	0.72	0.688	0.671	0.659					
Fully insulated slab	**20**		0.74	0.64	0.55	0.44	0.373	0.326	0.296	0.273	0.255	0.239	0.227	0.217

Note: These values are used for slab edge conditions with and without carpet.

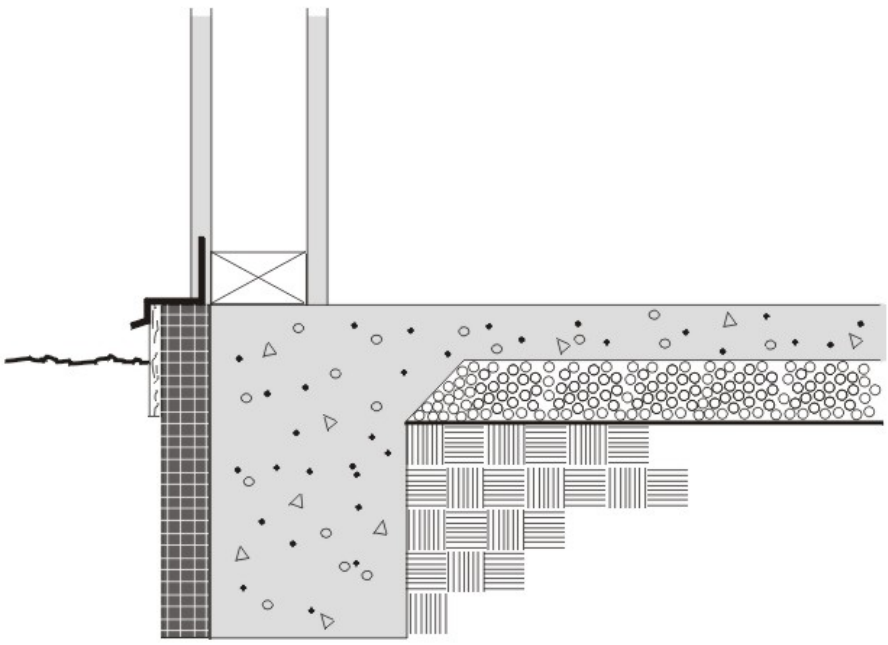

Figure 4.4.8 – Heated Slab-on-Grade Floor

Horizontal insulation is continuous insulation that is applied directly to the underside of the slab and extends inward horizontally from the perimeter for the distance specified or continuous insulation that is applied downward from the top of the slab and then extending horizontally to the interior or the exterior from the perimeter for the distance specified. *Vertical insulation* is continuous insulation that is applied directly to the slab exterior, extending downward from the top of the slab for the distance specified. *Fully insulated slab* is continuous insulation that extends downward from the top to the slab and along the entire perimeter and completely covers the entire area under the slab.

Assumptions: Data of this table is taken from the ASHRAE/IESNA Standard 90.1-2004, Appendix A.

JA4.5 Miscellaneous Construction

Table 4.5.1 – Doors

Description		U-factor (Btu/ºF-ft²)
		A
Uninsulated single-layer metal *swinging doors* or *non-swinging doors*, including single-layer uninsulated access hatches and uninsulated smoke vents:	**1**	1.45
Uninsulated double-layer metal *swinging doors* or *non-swinging doors*, including double-layer uninsulated access hatches and uninsulated smoke vents:	**2**	0.70
Insulated metal *swinging doors*, including fire-rated *doors*, insulated access hatches, and insulated smoke vents:	**3**	0.50
Wood *doors*, minimum nominal thickness of 1-3/4 in. (44 mm), including panel *doors* with minimum panel thickness of 1-1/8 in. (28 mm), and solid core flush *doors*, and hollow core flush *doors*:	**4**	0.50
Any other wood *door*:	**5**	0.60
Uninsulated single layer metal *roll up doors* including fire rated *door*	**6**	1.45
Insulated single layer metal *sectional doors,* minimum insulation nominal thickness of 1-3/8 inch; expanded polystyrene (R-4 per inch).	**7**	0.179
Source: ASHRAE 90.1-2007, Section A7.		

Table 4.5.2 – Physical Properties of Materials

Code	Description	R-value	Thickness	Conductivity	Density	Specific Heat
AR02	Asphalt Shingle & Siding	0.44			70.0	0.35
BP01	Building Paper, Permeable Felt	0.06				
PW03	Plywood 1/2 in.	0.63	0.0417	0.0667	34.0	0.29
GP01	Gypsum Board 1/2 in.	0.45	0.0417	0.0926	50.0	0.26
BR01	Built-up Roofing 3/8 in.	0.33	0.0313	0.0939	70.0	0.35
PW05	Plywood 3/4 in.	0.94	0.0625	0.0667	34.0	0.29
PW04	Plywood 5/8 in.	0.78	0.0521	0.0667	34.0	0.29
CP01	Carpet with Fibrous Pad	2.08				0.34
PB01	Particle Board Low Density 3/4 in.	1.39	0.0625	0.0450	75.0	0.31
SC01	Stucco 1 in.	0.20	0.0833	0.4167	116.0	0.20
WD05	Wood, Soft 4 in.	5.00	0.3333	0.0667	32.0	0.33
WD11	Wood, Hard 3/4 in.	0.68	0.0625	0.0916	45.0	0.30
-CC03	Heavy Wt. Dried Aggregate 4 in.	0.44	0.3333	0.7576	140.0	0.20
CC14	Heavy Wt. Undried Aggregate 4 in.	0.32	0.3333	1.0417	140.0	0.20
AC02	1/2 in. Acoustic Tile	1.26	0.0417	0.0330	18.0	0.32
AL33	Air Layer 4 in. or more, Horizontal Roof	0.92	1.0000	0.4167	120.0	0.20
CP01	Carpet with Fibrous Pad	2.08				0.34
Custom	Concrete	0.11			144.0	0.20
Custom	Light Weight CMU	0.35			105.0	0.20
Custom	Medium Weight CMU	0.35			115.0	0.20
Custom	Normal Weight CMU	0.35			125.0	0.20
Custom	Earth (Soil)	3.00	1.5000	0.5000	85.0	0.20
Custom	Logs 6 in.	7.50	0.5000	0.0667	32.0	0.33
Custom	Logs 8 in.	10.00	0.6667	0.0667	32.0	0.33
Custom	Logs 10 in.	12.49	0.8333	0.0667	32.0	0.33
Custom	Logs 12 in.	14.99	1.0000	0.0667	32.0	0.33
Custom	Logs 14 in.	17.49	1.1667	0.0667	32.0	0.33
Custom	Logs 16 in.	19.99	1.3333	0.0667	32.0	0.33
Custom	Earth 12 in.	2.00	1.0000	0.5000	85.0	0.20
Custom	Vented crawlspace	6.00	NA	NA	NA	NA
Custom	7/8" layer of stucco of R-0.18	0.18	0.0729	0.4167	116.0	0.20
Custom	Straw bale	30.00				
Custom	Acoustic tile + Metal	0.50	0.0417	0.0330	18.0	0.32
Custom	OSB 7/16 in.	0.44	0.4375	0.0667	34.0	0.29

Table 4.5.3 – Rules for Calculating Mass Thermal Properties From Published Values

Property	Units	Rule for Calculation
Heat Capacity (HC)	Btu/ºF-ft²	From Table 4.3.5, Table 4.3.6, or Table 4.3.7
U-factor	Btu/h-ºF-ft²	From Table 4.3.5, Table 4.3.6, or Table 4.14
C-factor	Btu/h-ºF-ft²	From Table 4.3.5, Table 4.3.6, or Table 4.3.7
Thickness (T)	Ft	From Table 4.3.5, Table 4.3.6, or Table 4.3.7
Specific Heat (SH)	Btu/ºF-lb	Assume that the specific heat of all concrete and masonry materials is 0.20 Btu/ºF-lb and that the specific heat of wood or straw (see Table 4.3.11 and Table 4.3.12) is 0.39 Btu/ºF-lb.
Weight (W)	lb/ft²	Divide the HC by the assumed specific heat. Wall weight is used with the low-rise residential standards to define a high mass wall.
Density (D)	lb/ft³	Multiply the weight (as calculated above) by the thickness (T)
Conductivity (C)	Btu/h-ºF-ft	Divide the published C-factor by the thickness (T). When only a U-factor is published, calculate the C-factor by assuming an exterior air film of 0.17 and an interior air film of 0.68.

Joint Appendix JA5

Appendix JA5 – Technical Specifications For Occupant Controlled Smart Thermostats

JA5.1 Introduction

Joint Appendix 5 (JA5) provides the technical specifications for an Occupant Controlled Smart Thermostat (OCST). An OCST can be an independent device or part of a control system comprised of multiple devices.

The requirements in this appendix are intended to be compatible with National Electrical Manufacturers Association (NEMA) Standard DC 3-2013 Residential Controls – Electrical Wall Mounted Thermostats and NEMA DC 3 Annex A-2013 Energy-Efficiency Requirements for Programmable Thermostats.

JA5.1.1 Manufacturer Self-Certification

An OCST is compliant with Title 24, Part 6, only if it has been certified to the Energy Commission as meeting all of the requirements in this Appendix. Certification to the Energy Commission shall be as specified in Section 110.0.

JA5.2 Required Functional Specification

JA5.2.1 Setback Capabilities

An OCST shall meet the requirements of Section 110.2(c). Thermostats for heat pumps shall also meet the requirements of Section 110.2(b).

JA5.2.2 Restart Settings

In the event of a disruption of power to the device that results in power off or restart, upon device restart, the device shall automatically restore the most recently programmed settings, including reconnection to a network, if the device was previously enabled and network connectivity is available.

JA5.2.3 Automatic Rejoin

An OCST shall connect~~,~~ and remain connected in its communication path and control end point. The OCST shall incorporate an automatic rejoin function. When physical and/or logical communication is lost, the OCST shall trigger its automatic rejoin function to restore the physical and/or logical communication.

JA5.2.4 Event Responses

Event response, unless overridden by the occupant or modified by an energy management control system or service, may be triggered by price signals or Demand Response Signals. The OCST shall provide one set of event responses for price signals and one set of event responses for Demand Response Signals. The responses may be common for both types of events. The OCST's default responses shall comply with the following:

(a) A Demand Response Signal shall trigger the OCST to adjust the thermostat setpoint by either the default number of degrees or the number of degrees established by the occupant.

(b) When a price signal indicates a price in excess of a price threshold established by the occupant, the OCST shall adjust the thermostat setpoint by either the default number of degrees or the number of degrees established by the occupant.

(c) In response to price signals or Demand Response signals, the OCST shall default to an event response that initiates setpoint offsets of +4°F for cooling and -4°F for heating relative to the current setpoint.

(d) The OCST shall have the capability to allow occupants or their representative to modify the default event response with occupant defined event responses for cooling and heating relative to the current setpoint in response to price signals or Demand Response Signals.

(e) Override Function: Occupants shall be able to change the event responses and thermostat settings or setpoints at any time, including during price events or Demand Response Periods.

(f) The Demand Response Signal shall start the Demand Response Period either immediately or at a specific start time as specified in the event signal and continue for the Demand Response Period specified in the Demand Response Signal or until the occupant overrides the event setpoint.

(g) The thermostat's price response shall start either immediately or at a specific start time as specified in the pricing signal and continue for the duration specified in the pricing signal or until the occupant overrides the event setpoint.

(h) The OCST shall have the capability to allow occupants to define setpoints for cooling and heating in response to price signals or Demand Response signals as an alternative to the default event response.

(i) At the end of a price event or Demand Response Period, the thermostat setpoint shall be set to the setpoint that is programmed for the point in time that the event ends or to the manually established setpoint that existed just prior to the Demand Response Period.

The OCST shall include the capability to allow the occupant to restore the factory installed default settings.

JA5.2.5 User Display and Interface

The OCST shall have the capability to display information to the user. The following information shall be readily available whenever the OCST display is active:

(a) communications system connection status,

(b) an indication that a Demand Response Period or pricing event is in progress,

(c) the currently sensed temperature,

(d) the current setpoint.

JA5.2.6 Required Functional Behavior

(a) *Normal Operation.* Normal operation of an OCST is defined to be the OCST's prevailing mode of operation as determined by the occupant's prior settings and use of features provided by the OCST manufacturer's design. Aspects of normal operation of an OCST may be modified or interrupted in response to occupant subscribed price signals or when Demand Response Periods are in progress, but only to the extent specified by occupants or their representatives.

Unless an occupant has elected to connect the OCST to an energy management control system or service that provides for alternate strategies, the OCST shall provide a mode of operation whereby it controls temperature by following the scheduled temperature setpoints.

Occupants shall always have the ability to change OCST settings or use other features of an OCST during an event. Those changes may alter what is considered to be the prevailing mode of operation when a Demand Response Period is terminated and the OCST returns to normal operation.

(b) *Demand Responsive Control.* Upon receiving a price signal or a Demand Response Signal, OCSTs shall be capable of automatic event response by adjusting the currently applicable temperature setpoint by the number of degrees indicated in the temperature offset (heating or cooling, as appropriate).

Override: OCSTs shall allow an occupant or their representative to alter or eliminate the default response to price signals or Demand Response Signals, and to override any individual price response or Demand Responsive Control and allow the occupant to choose any temperature setpoint at any time including during a price event or a Demand Response Period.

When the price signal changes to a non-response level or the Demand Response Period is concluded, OCSTs shall return to normal operation. The thermostat setpoint shall be set to the setpoint that is programmed for the point in time that the event ends or to the manually established setpoint that existed just prior to the Demand Response Period.

The OCST shall also be equipped with the capability to allow occupants to define setpoints for cooling and heating in response to price signals or Demand Response Signals as an

alternative to the default event response. The default setpoint definitions unless redefined by the occupant shall be as follows:

1. The default price response or Demand Response Period setpoint in the cooling mode for OCSTs shall be 82°F. The OCST shall allow the occupant to change the default event setpoint to any other value.
2. The default price response or Demand Response Period setpoint in the heating mode for OCSTs shall be 60°F. The OCST shall allow the occupant to change the default event setpoint to any other value.
3. The OCST shall ignore price response or Demand Response Period setpoints that are lower (in cooling mode) or higher (in heating mode) than the programmed or occupant selected prevailing setpoint temperature upon initiation of the price event or Demand Response Period.
4. By default, thermostats shall not be remotely set above 90°F or below 50°F. Occupants shall have the ability to redefine these limits. This measure protects occupant premises from extreme temperatures that might otherwise be imposed by event responses, should the occupant already have a very high or low temperature setpoint in effect.

The occupant may still override or change the setpoint during all price events and Demand Response Periods. Price signal response and Demand Responsive Control only modify the operating range of the thermostat. They do not otherwise affect the operation and use of features provided by the manufacturer's design.

JA5.3 HVAC System Interface

HVAC wiring terminal designations shall be clearly labeled. OCSTs shall use labels that comply with Table 5-1 in NEMA DC 3-2013.

Joint Appendix JA6

Appendix JA6 – HVAC System Fault Detection and Diagnostic Technology

Appendix JA6 – HVAC System Fault Detection and Diagnostic Technology 1
JA6.1 Fault Indicator Display (FID) 2
JA6.1.1 Purpose and Scope 2
JA6.1.2 FID Product Approval 2
JA6.1.3 FID Installation 2
JA6.1.4 FID Product Documentation 2
JA6.1.5 Optional Fault Detection Capabilities 3
JA6.1.6 Requirements for a Fault Indicator Display 3
JA6.2 Saturation Pressure Measurement Sensors 8
JA6.2.1 Purpose and Scope 8
JA6.2.2 SPMS Device Approval 8
JA6.2.3 Standard for Saturation Pressure Measurement Sensors 8
JA6.3 Economizer Fault Detection and Diagnostics Certification Submittal Requirements 9
JA6.3.1 Information that shall be included with the Declaration 9
JA6.3.2 Fault Detection Test Specifications 10
JA6.3.3 Reporting of Test Results 11
JA6.3.4 Declaration 13
Declaration 14
JA6.3.5 Certification 14

JA6.1 Fault Indicator Display (FID)

JA6.1.1 Purpose and Scope

Joint Appendix JA6.1 defines required elements for fault indicator display technologies that utilize instrumentation and computer software functionality to monitor and determine the operating performance of vapor compression air conditioning and heat pump systems, to provide visual indication to the system owner/operator if the system's refrigerant charge or metering device performance does not conform to approved target parameters for minimally efficient operation.

JA6.1.6 specifies the required instrumentation, instrumentation accuracy, parameters measured, required calculations, allowable deviations from target values for system operating parameters, and the requirements for system fault indication for a fault indicator display technology that conforms to the methods for verifying refrigerant charge and metering device performance described in Reference Residential Appendix RA3.2.2.

Fault indicator display technologies other than what is described in Section JA6.1 are possible, and when vapor compression air conditioner and heat pump system refrigerant charge, metering device and airflow operating performance can be reliably determined by methods and instrumentation other than those specifically defined in section JA6.1 such alternative fault indicator display technologies may be allowed for Fault Indicator Display compliance credit if the manufacturer of the product requests approval from the Energy Commission. The Commission may grant such approval after reviewing submittals from the applicant. Fault indicator display technologies that are approved by the Commission shall be specified in documentation that will be published as an addendum to this appendix.

The applicant shall provide information that specifies the required instrumentation, the instrumentation accuracy, the parameters measured, the required calculations, the allowable deviations from target values for system operating parameters, and the requirements for system fault indication.

JA6.1.2 FID Product Approval

Fault indicator display technology manufacturers shall certify to the Energy Commission that the fault indicator display technology meets the requirements of Reference Joint Appendix JA6.1.

JA6.1.3 FID Installation

Fault indicator display devices shall be factory installed by the space-conditioning system manufacturer, or field installed according to the space-conditioning system manufacturer's requirements and the FID manufacturer's specifications.

JA6.1.4 FID Product Documentation

Manufacturers of FID technologies shall, upon request, provide comprehensive engineering specification documentation, installation and technical field service documentation, and homeowner user instructions documentation to designers, installers, service personnel and homeowners who utilize the technology.

JA6.1.5 Optional Fault Detection Capabilities

The FID may also be used to signal other system operation faults as long as these additional functions do not detract from the proper function of the refrigerant charge, metering device, or airflow operation indications.

JA6.1.6 Requirements for a Fault Indicator Display

This section specifies the required instrumentation, the instrumentation accuracy, the parameters measured, the required calculations, the allowable deviations from target values for system operating parameters, and the requirements for system fault indication for a fault indicator display technology.

JA6.1.6.1 Instrumentation Specifications

Instrumentation for the procedures described in JA6.1.6 shall conform to the following specifications:

JA6.1.6.1.1 Temperature Sensors

The temperature sensors shall have an accuracy of plus or minus1.8°F.

JA6.1.6.1.2 Refrigerant Pressure Sensors

Refrigerant pressure sensors shall have an accuracy of plus or minus 3 percent of full scale.

JA6.1.6.1.3 Parameters Measured

The following parameters shall be measured:

(a) Suction line temperature ($T_{suction,}$).

(b) Liquid line temperature (T_{liquid}).

(c) Evaporator saturation temperature or low side refrigerant pressure ($T_{evaporator, sat}$).

(d) Condenser saturation temperature or high side refrigerant pressure ($T_{condensor, sat}$).

(e) Return air wet bulb temperature or humidity ($T_{return, wb}$).

(f) Return air dry bulb temperature ($T_{return, db}$).

(g) Condenser air entering dry bulb temperature ($T_{condenser, db}$).

(h) Supply air dry bulb temperature ($T_{supply, db}$).

JA6.1.6.2 Refrigerant Charge, Metering Device, and Airflow Calculations

Refrigerant charge, metering device and airflow calculations for determining superheat, subcooling, and temperature split values shall conform to the specifications of this section utilizing the measured parameters data from instrumentation as specified in Section JA6.1.6.1.

JA6.1.6.2.1 Fixed Metering Device Calculations

The fixed metering device calculations are used only for systems equipped with fixed metering devices. These include capillary tubes and piston-type metering devices.

(a) Calculate Actual Superheat as the suction line temperature minus the evaporator saturation temperature. Actual Superheat = $T_{suction,} – T_{evaporator, sat}$.

(b) Determine the Target Superheat using Reference Residential Appendix RA3 Table RA3.2-2, the return air wet-bulb temperature ($T_{return, wb}$) and the condenser air entering dry-bulb temperature ($T_{condenser, db}$). If a dash mark is read from Reference Residential Appendix RA3 Table RA3.2-2, the target superheat is less than 5°F.

(c) Calculate the difference between Actual Superheat and Target Superheat (Actual Superheat - Target Superheat)

JA6.1.6.2.2 Variable Metering Device Calculations

The variable metering device calculations are used only for systems equipped with variable metering devices. These include Thermostatic Expansion Valves (TXV) and Electronic Expansion Valves (EXV).

(a) Calculate Actual Subcooling as the condenser saturation temperature minus the liquid line temperature. Actual Subcooling = $T_{condenser, sat}$ - T_{liquid}.

(b) Determine the Target Subcooling specified by the manufacturer.

(c) Calculate the difference between actual subcooling and target subcooling (Actual Subcooling - Target Subcooling.

(d) Calculate Actual Superheat as the suction line temperature minus the evaporator saturation temperature. Actual Superheat = $T_{suction} – T_{evaporator, sat}$.

(e) If possible, determine the Superheat Range specified by the manufacturer.

JA6.1.6.2.3 Minimum Airflow Calculations

The minimum airflow calculations are designed to determine whether the rate of airflow across the evaporator coil is above the minimum airflow rate requirement for a valid refrigerant charge test result.

(a) Calculate the Actual Temperature Split as the return air dry-bulb temperature minus the supply air dry-bulb temperature. Actual Temperature Split = $T_{return, db}$ - $T_{supply, db}$

(b) Determine the Target Temperature Split from Table JA6.1-1 using the return air wet-bulb temperature ($T_{return, wb}$) and return air dry-bulb temperature ($T_{return, db}$).

(c) Calculate the difference between target and actual temperature split (Actual Temperature Split - Target Temperature Split).

JA6.1.6.3 System Fault Indication

Data from instrumentation specified in Section JA6.1.6.1 and calculations specified in Section JA6.1.6.2 shall be processed and interpreted continuously or at sufficiently frequent time step intervals, during normal system operation, to insure that system operating conditions that meet the system fault criteria of this section will be detected, and indicated by the fault indicator display. Data from instrumentation specified in Section JA6.1.6.1 and calculations specified in Section JA6.1.6.2 shall be processed and interpreted in a manner that prevents indication of system faults when system fault criteria are triggered by temporary or transitory operating conditions that are not true indicators of problems with refrigerant charge, metering device, or airflow performance.

The fault indicator display shall:

(a) be clearly visible to occupants of the home during normal operation.

(b) be located on or within one foot of (one of) the thermostat(s) controlling the air conditioner.

(c) display an indication of a system fault requiring service or repair when system normal operation fails to meet the required operating performance criteria specified in this section. These system fault indications shall be displayed for a period of at least 7 days after a system fault is detected unless the fault indicator display is reset by the installing or servicing technician.

1. Refrigerant charge verification criterion for fixed metering device systems.

If the air conditioner has a fixed metering device, runs for 15 minutes, has a Target Superheat value determined by Reference Residential Appendix RA3 Table RA3.2-2 that is greater than or equal to 5°F, the condenser air entering temperature is greater than or equal to 65°F, and the minimum airflow requirement from item d below is satisfied, then the conditions for a valid refrigerant charge test are satisfied.

If the conditions for a valid refrigerant charge test are satisfied, and the air conditioner has an Actual Superheat value that deviates more than plus or minus 10°F from the Target Superheat value determined by Reference Residential Appendix RA3 Table RA3.2-2, then the system fails the refrigerant charge test, and a system fault shall be reported.

2. Refrigerant charge verification criterion for variable metering device systems.

If the air conditioner has a TXV or EXV, runs for 15 minutes, the condenser air entering temperature is greater than or equal to 65°F, and the minimum airflow requirement from item d below is satisfied, then the conditions for a valid refrigerant charge test are satisfied.

If the conditions for a valid refrigerant charge test are satisfied, and the air conditioner has an Actual Subcooling value that deviates more than plus or minus 6°F from the Target Subcooling value listed by the manufacturer, then the system fails the refrigerant charge test, and a system fault shall be reported.

3. Variable metering device function verification criterion.

If the air conditioner has a TXV or EXV, runs for 15 minutes, the condenser air entering temperature is greater than or equal to 65°F, and the minimum airflow requirement from item d below is satisfied, then the conditions for a valid metering device test are satisfied.

If the conditions for a valid metering device test are satisfied, and the air conditioner has an Actual Superheat value outside the range specified by the manufacturer (or outside the range 2°F to 28°F if there is no manufacturer's specification), then the system fails the metering device test, and a system fault shall be reported.

4. Minimum airflow verification criterion.

If the air conditioner runs for 15 minutes, and the condenser air entering temperature is greater than or equal to 65°F, then the conditions for a valid minimum airflow test are satisfied.

If the conditions for a valid minimum airflow test are satisfied, and the air conditioner has an Actual Temperature Split value that deviates more than plus 5°F from the Target Temperature Split value determined by Table JA6.1-1, then the system fails the minimum airflow test, and a system fault shall be reported.

JA6.1.6.4 Optional Functionality

The fault indicator display devices may be set to tighter specifications than those specified in Section JA6.1.6.3. The fault indicator display may also be used to signal other system faults as long as these additional diagnostic functions do not detract from the accuracy of the measurement and reporting of system faults as specified in Section JA6.1.6.3.

JA6.1.6.4.1 Self Diagnostic Reporting

When equipped with self diagnostic reporting functionality, the FID shall check for communication with every sensor and provide an indication when there are any sensor failures.

JA6.1.6.4.2 Data Access

In order to provide for verification of sensor data and FID system functionality, data access shall be provided. The FID manufacturer shall specify the data access method(s), and the minimum data reporting capability including requirements for any data history reporting.

Table JA6.1-1 Target Temperature Split (Return Dry-Bulb – Supply Dry-Bulb)

		Return Air Wet-Bulb (ºF) (T return, wb)																									
-	-	**50**	**51**	**52**	**53**	**54**	**55**	**56**	**57**	**58**	**59**	**60**	**61**	**62**	**63**	**64**	**65**	**66**	**67**	**68**	**69**	**70**	**71**	**72**	**73**	**74**	**75**	**76**
Return Air Dry–Bulb (ºF) (T return, db)	**70**	20.9	20.7	20.6	20.4	20.1	19.9	19.5	19.1	18.7	18.2	17.7	17.2	16.5	15.9	15.2	14.4	13.7	12.8	-	-	-	-	-	-	-	-	-
	71	21.4	21.3	21.1	20.9	20.7	20.4	20.1	19.7	19.3	18.8	18.3	17.7	17.1	16.4	15.7	15.0	14.2	13.4	12.5	-	-	-	-	-	-	-	-
	72	21.9	21.8	21.7	21.5	21.2	20.9	20.6	20.2	19.8	19.3	18.8	18.2	17.6	17.0	16.3	15.5	14.7	13.9	13.0	12.1	-	-	-	-	-	-	-
	73	22.5	22.4	22.2	22.0	21.8	21.5	21.2	20.8	20.3	19.9	19.4	18.8	18.2	17.5	16.8	16.1	15.3	14.4	13.6	12.6	11.7	-	-	-	-	-	-
	74	23.0	22.9	22.8	22.6	22.3	22.0	21.7	21.3	20.9	20.4	19.9	19.3	18.7	18.1	17.4	16.6	15.8	15.0	14.1	13.2	12.2	11.2	-	-	-	-	-
	75	23.6	23.5	23.3	23.1	22.9	22.6	22.2	21.9	21.4	21.0	20.4	19.9	19.3	18.6	17.9	17.2	16.4	15.5	14.7	13.7	12.7	11.7	10.7	-	-	-	-
	76	24.1	24.0	23.9	23.7	23.4	23.1	22.8	22.4	22.0	21.5	21.0	20.4	19.8	19.2	18.5	17.7	16.9	16.1	15.2	14.3	13.3	12.3	11.2	10.1	-	-	-
	77	-	24.6	24.4	24.2	24.0	23.7	23.3	22.9	22.5	22.0	21.5	21.0	20.4	19.7	19.0	18.3	17.5	16.6	15.7	14.8	13.8	12.8	11.7	10.6	9.5	-	-
	78	-	-	-	24.7	24.5	24.2	23.9	23.5	23.1	22.6	22.1	21.5	20.9	20.2	19.5	18.8	18.0	17.2	16.3	15.4	14.4	13.4	12.3	11.2	10.0	8.8	-
	79	-	-	-	-	-	24.8	24.4	24.0	23.6	23.1	22.6	22.1	21.4	20.8	20.1	19.3	18.5	17.7	16.8	15.9	14.9	13.9	12.8	11.7	10.6	9.4	8.1
	80	-	-	-	-	-	-	25.0	24.6	24.2	23.7	23.2	22.6	22.0	21.3	20.6	19.9	19.1	18.3	17.4	16.4	15.5	14.4	13.4	12.3	11.1	9.9	8.7
	81	-	-	-	-	-	-	-	25.1	24.7	24.2	23.7	23.1	22.5	21.9	21.2	20.4	19.6	18.8	17.9	17.0	16.0	15.0	13.9	12.8	11.7	10.4	9.2
	82	-	-	-	-	-	-	-	-	25.2	24.8	24.2	23.7	23.1	22.4	21.7	21.0	20.2	19.3	18.5	17.5	16.6	15.5	14.5	13.4	12.2	11.0	9.7
	83	-	-	-	-	-	-	-	-	-	25.3	24.8	24.2	23.6	23.0	22.3	21.5	20.7	19.9	19.0	18.1	17.1	16.1	15.0	13.9	12.7	11.5	10.3
	84	-	-	-	-	-	-	-	-	-	25.9	25.3	24.8	24.2	23.5	22.8	22.1	21.3	20.4	19.5	18.6	17.6	16.6	15.6	14.4	13.3	12.1	10.8

JA6.2 Saturation Pressure Measurement Sensors

JA6.2.1 Purpose and Scope

Appendix JA6.2 specifies the required instrumentation, and the instrumentation accuracy, for a saturation pressure measurement sensor (SPMS) device intended to provide a means for a HERS Rater to observe space conditioning system refrigerant pressure measurement data without attaching refrigerant gages to the refrigerant system service access ports.

The SPMS device manufacturer shall provide certification to the commission that the SPMS device conforms to the requirements of Reference Joint Appendix JA6.2.

JA6.2.2 SPMS Device Approval

SPMS devices, if approved by the Commission, shall be allowed for use for determining compliance with the refrigerant charge verification requirements in the Standards. The Commission may grant such approval after reviewing submittals from the applicant. SPMS devices that are approved by the Commission shall be listed as approved SPMS devices in directories published by Energy Commission.

Manufacturers of approved SPMS devices shall, upon request, provide comprehensive engineering specification documentation, installation and technical field service documentation, and user instructions documentation to installers and service personnel that utilize the procedure.

JA6.2.3 Standard for Saturation Pressure Measurement Sensors

SPMS devices shall measure and report the refrigerant system pressure for both the high-pressure side and the low pressure side of the air conditioner or heat pump refrigerant system within the tolerances given in Section JA6.2.3.1.

JA6.2.3.1 Instrumentation Specifications

The pressure measurement instrumentation shall have accuracy equal to or better than the following:

(a) accuracy: ± 7.0 psi liquid line pressure

(b) accuracy: ± 3.5 psi suction pressure

JA6.2.3.2 Installation

SPMS devices shall be installed by the space-conditioning equipment manufacturer, or installed in the field according to any applicable space-conditioning equipment manufacturer requirements, within 12 inches of the refrigerant system service port.

JA6.3 Economizer Fault Detection and Diagnostics Certification Submittal Requirements

Title 24, Part 6, Section 120.2(i) requires that economizer FDD functions be installed on air-cooled unitary air conditioning systems with an air handler mechanical cooling capacity over 33,000 Btu/hr cooling capacity, with the ability to detect the faults specified in Section 120.2(i). Each air conditioning system manufacturer, controls supplier, or FDD supplier wishing to certify that their FDD analytics conform to the FDD requirements of Title 24, Part 6, may do so in a written declaration. This requires that a letter be sent to the California Energy Commission declaring that the FDD conforms to Title 24, Part 6, Section 120.2(i). The declaration at the end of this section shall be used to submit to the California Energy Commission.

JA6.3.1 Information that shall be included with the Declaration

The air conditioning system manufacturer, controls supplier, or FDD supplier provides evidence as shown below:

(a) The following temperature sensors are permanently installed to monitor system operation:
   i. Outside air.
   ii. Supply air.
   iii. Return air, when required for differential economizer operation.

   Evidence: Photograph or schematic of all required sensors indicating their recommended mounting instructions.

(b) Temperature sensors have an accuracy of ±2°F over the range of 40°F to 80°F
   Evidence: Photocopy of sensor specification.

(c) The controller is capable of providing system status by indicating the following:

   i. Free cooling available.
   ii. Economizer enabled.
   iii. Compressor enabled.
   iv. Heating enabled, if applicable.
   v. Mixed air low limit cycle active.
   vi. The current value of each sensor.

   Evidence: Laboratory test: describe how the mode is simulated and the wording used to indicate the status.

(d) The unit controller is capable of manually initiating each operating mode so that the operation of compressors, economizers, fans, and heating system, if applicable, can be independently tested and verified.

   Evidence: Photocopy of controller manual showing instructions for manually initiating each operating mode.

(e) The unit controller is capable of reporting faults one of the following ways:

A. To an Energy Management Control System regularly monitored by facility personnel, or;

B. Annunciated locally on one or more zone thermostats, or on a device within five (5) feet of zone thermostat(s), clearly visible, at eye level, and meeting the following requirements:

i. On the thermostat, device, or an adjacent written sign, display instructions to contact appropriate building personnel or an HVAC technician.

ii. In buildings with multiple tenants, the annunciation shall either be within property management offices, or in common space accessible by the property or building manager.

C. To a fault management application which automatically provides notification of the fault to a remote HVAC service provider.

Evidence: Supplier's description of how they comply, and supporting documentation such as a photocopy of controller manual or photograph of fault management application, zone thermostat, or other device showing indication of a fault.

(f) The unit control is capable of detecting the following faults:

i. Air temperature sensor failure/fault.
ii. Not economizing when it should.
iii. Economizing when it should not.
iv. Damper not modulating.
v. Excess outdoor air.

JA6.3.2 Fault Detection Test Specifications

To provide evidence that the required faults are detected by the FDD functionality, the FDD Provider shall perform a No-Fault and Fault test for each of the tests in Table 1. A pre-defined Test Procedure such as the one provided in the example shown in Table 2 could be used to fill out Table 1.

Table JA6.3-1 – Sample of a completed fault test

	Faults				
Tests	Air temperature sensor failure/fault	Not Economizing when it should	Economizing when it Should not	Damper not modulating	Excess outdoor air
1. Damper is Stuck Open			X	X	X
2. Damper Stuck at Minimum		X		X	
3. Bad or Unplugged Actuator		X	X	X	
4. Sensor Hard Failure	X	X	X		X
5. Actuator Mechanically Disconnected		X	X	X	X

JA6.3.3 Reporting of Test Results

The results of each test shall be provided in a report using a standard test results reporting format that provides the following information for each test:

a. Organization and individual conducting the test.

b. Time, Date, and Location of test.

c. Make and model of unit/control tested.

d. Range of models represented by test.

e. Test procedure used, including description of the method for imposing fault with repeatability.

f. Test driving Conditions (outdoor air temperature, return air temperature or enthalpy as required by the type of high limit control being used).

g. Results of the test: Alarms generated.

h. Provide a bill of materials for the configuration that is being certified.

i. The FDD supplier shall describe any special field or data verifications that are required for the particular FDD analytics (beyond those included in Acceptance Test requirements).

j. Sample of documentation that would accompany each qualifying set of FDD analytics.

k. Name and contact information of company personnel in charge of certification.

l. A mapping from the manufacturer's alarm description to what is required by Title 24 similar to Table 1.

Table JA6.3-2 - Sample Test Procedure

Step	Description	Purpose
1	Close the economizer damper fresh air blades, then secure the blades in a manner that prevents opening.	Test alarm response when "Damper Stuck at Minimum"
2	Simulate conditions such that the damper actuator attempts to open the fresh air blades. Verify the damper blades remains secured and that the fault(s) specified in Table 1 are detected. Record the annunciated fault(s) and fault text.	
3	Release the blades and allow the economizer damper to modulate open. Verify the annunciated fault(s) have cleared.	
4	Open fully the economizer damper fresh air blades, then secure the blades in a manner that prevents closing.	Test alarm response when "Damper is Stuck Open"
5	Simulate conditions such that the damper actuator attempts to modulate the fresh air blade closed. Verify the damper remains secured and that the fault(s) specified in Table 2 are detected. Record the annunciated fault(s) and fault text.	
6	Release the blades and allow the economizer damper to modulate. Verify the annunciated fault(s) have cleared.	
7	Disconnect 1 sensor and verify the fault(s) specified in Table 1 are detected. Record the annunciated fault(s) and fault text.	Test alarm response when "Sensor Hard Failure"
8	Reconnect the sensor and verify that the annunciated fault(s) have cleared.	
9	Repeat steps 7 – 8 for each available sensor.	
10	Electrically disconnect the damper actuator and verify the fault(s) specified in Table 1 are detected. Record annunciated fault(s) and fault text.	Test alarm response when "Bad or Unplugged Actuator"
11	Reconnect the damper actuator. Verify the fault(s) have cleared and normal economizer operation has resumed.	
12	Mechanically disconnect the damper actuator from the damper blade assembly.	Test alarm response when "Actuator Disconnected"
13	Simulate conditions such that the damper actuator would be moving the damper blades. Verify the fault(s) specified in Table 2 are detected. Record annunciated fault(s) and fault text.	
14	Reconnect the damper actuator to the damper blade assembly. Verify the fault(s) have cleared and normal economizer operation has resumed.	
15	Simulate conditions necessary to generate system status of "Free cooling available". Record text of annunciated status.	Test for System Status Capability
16	Simulate system conditions necessary to generate system status of "Economizer enabled". Record text of annunciated status.	
17	Simulate system conditions necessary to generate system status of "Compressor enabled". Record text of annunciated status.	
18	If equipped with a heating system, simulate system conditions necessary to generate system status of "Heating enabled". Record text of annunciated status.	
19	Simulate system conditions necessary to generate system status of "Mixed air low limit cycle active". Record text of annunciated status.	

JA6.3.4 Declaration

Consistent with the requirements of Title 24, Part 6, Sections 100.0(h) and 120.2(i), companies wishing to certify to the California Energy Commission shall execute a declaration under penalty of perjury attesting that all information provided is true, complete, accurate, and in compliance with the applicable provisions of Part 6. Companies may fulfill this requirement by providing the information, signing the declaration below and submitting to the California Energy Commission as as specified by the instructions in JA6.3.5.

Manufacturer, Model Name and Number of all devices being certified

Manufacturer	Model Name	Model Number

When providing the information below, be sure to enter complete mailing addresses, including postal/zip codes.

Certifying Company

Contact Person Name *	Phone 1
Certifying Company Name **	Phone 2
Address	Fax
(Address)	E-mail
(Address)	Company Website (URL)

* If the contact person named above is NOT the person whose signature is on the Declaration, then the full contact information for the person whose signature is on the Declaration must also be provided on a separate page.

** If the company named above is: A) a parent entity filing on behalf of a subsidiary entity; B) a subsidiary entity filing on behalf of a parent entity; or C) an affiliate entity filing on behalf of an affiliate entity, the above contact information must be provided for any additional entities on a separate page.

Manufacturer (if different from Certifying Company)

Contact Person Name	Phone 1
Manufacturing Company Name	Phone 2
Address	Fax

(Address)	E-mail
(Address)	Company Website (URL)

Declaration

I declare under penalty of perjury under the laws of the State of California that:

(1) All the information in this statement is true, complete, accurate, and in compliance with all applicable provisions of Section 120.2(i) of Title 24, Part 6 of the California Code of Regulations.

(2) Each Fault Detection and Diagnostic (FDD) system has been tested in accordance with all applicable requirements of Section 120.2(i)1-120.2(i)7 of Title 24, Part 6 of the California Code of Regulations.

(3) [If the party submitting this statement is a corporation, partnership, or other business entity] I am authorized to make this declaration, and to file this statement, on behalf of the company named below.

Certifying Company Name		Date
Name/Title (please print)		Signature

JA6.3.5 Certification

Send declarations and evidence of functionality or test reports to the addresses below. Electronic submittals are preferred.

(1) Electronic submittal:

CertifiedtoCEC@energy.ca.gov

Attn: FDD Certification

(2) Mail:

Attn: FDD Certification

Building Standards Development Office

California Energy Commission

1516 Ninth St., MS 37

Sacramento, CA 95814

Joint Appendix JA7

Appendix JA7 – Data Registry Requirements

Appendix JA7 – Data Registry Requirements 1
JA7.1 Purpose and Scope 3
JA7.2 Definitions 3
JA7.3 Introduction 9
JA7.4 Roles and Responsibilities, and Authorized Users 11
JA7.4.1 Registration Provider 11
JA7.4.2 Authorized Users 11
JA7.4.3 View-Only Authorized User 12
JA7.4.4 Documentation Author 12
JA7.4.5 Field Technician 12
JA7.4.6 Registration Signer (Responsible Person) 13
JA7.4.7 Enforcement Agency 13
JA7.5 Document Registration Requirements 15
JA7.5.1 Overview 15
JA7.5.2 Document Appending 15
JA7.5.3 Data Validation for Compliance Document Registration 16
JA7.5.4 Registration Numbering Conventions 17
JA7.5.5 Verification of Authenticity of Copies of Registered Documents 18
JA7.5.6 Project Document Configuration 19
JA7.5.7 Certificate of Compliance Requirements 21
JA7.5.8 Certificate of Installation Requirements 22
JA7.5.9 Certificate of Verification Requirements 22
JA7.5.10 Certificate of Acceptance Requirements 23
JA7.6 Electronic and Digital Signature Requirements 24
JA7.6.1 Introduction 24
JA7.6.2 Overall Description 24
JA7.6.3 Specific requirements 27
JA7.7 Data Exchange Requirements 33
JA7.7.1 Data Exchange for Document Registration Procedures 33
JA7.8 Data Registry Approval 37

JA7.8.1 Overview 37

JA7.8.2 *Application Checklist* 37

JA7.8.3 *Where a Registration Provider makes use of an Application Programming Interface (API), each EDDS that the API interfaces with must be approved. Types of Approval* 39

JA7.8.4 Rescinding Approval (Deactivation) of Data Registries 41

JA7.8.5 Data Registry User Manual 43

JA7.1 Purpose and Scope

Appendix JA7 specifies required functional and technical elements for Data Registries that provide services to authorized users and receive data to produce, register, retain, and distribute both copies of compliance documents and their associated Compliance Registration Packages required for compliance with Title 24, Part 6. The functional and technical elements specified in this document include the following:

(a) Document registration is defined.

(b) Roles and responsibilities for users and administrators of data registries are defined.

(c) Requirements for registered documents are defined.

(d) Requirements for configuration of project documents in the Data Registry are defined.

(e) Requirements for electronic and digital signatures used on registered documents are defined.

(f) Requirements for data exchange between Data Registries and external software tools are defined.

(g) Requirements for transmittal of copies of compliance documents and Compliance Registration Packages to a Commission Compliance Document Repository at time of registration are defined.

(h) Procedures for approval of Data Registries and software used for data input to data registries are defined.

Refer to the Data Registry Requirements Manual for additional guidance regarding functional and technical aspects of the requirements in Appendix JA7, including forms, to assist designers and builders in meeting the standards.

JA7.2 Definitions

For the purposes of the specifications in Appendix JA7, the following definitions shall apply:

Application Programming Interface (API) is any software that serves as an intermediary between a Data Registry and any other software, database, data entry method, or EDDS.

Asymmetric Key Encryption is also known as public key encryption. This type of encryption uses a pair of keys that are mathematically related: one key for encryption and another key for decryption. In digital signature processing, a user is assigned a private key that is not shared with anyone, and a public key that is given to anyone who receives digitally signed material from the user.

From California Code of Regulations, Title 2. Section 22003, List of Acceptable Technologies: “The technology known as Public Key Cryptography is an acceptable technology for use by public entities in California...”

All major development environments such as Microsoft and Adobe support PKCS1 asymmetrical key encryption.

Authorized User is a person who has a user account with a Data Registry and is required to provide their correct ~~user name~~username and password in order to access the Data Registry. Data Registry users may be required to provide professional licensure, certification or credential information, or other qualifying information as condition of receiving authority to provide signatures for certain types of documentation.

Commission means the State of California Energy Resources Conservation and Development Commission, commonly known as the California Energy Commission, also referred to as the Energy Commission.

Commission Compliance Document Repository (also known as an electronic document repository) is an electronic database and document storage software application used for retention of registered electronic Compliance Documents generated by Data Registries, and may also contain data and documentation relevant to other regulatory procedures administered by the California Energy Commission. The Commission Compliance Document Repository shall maintain these retained documents in accordance with Evidence Code sections 1530-1532 (in the custody of a public entity).

Compliance Data Exchange File is an XML file that contains compliance data used to populate a Compliance Document. The Compliance Data Exchange File is part of the Compliance Registration Package.

Compliance Document is one of the following documents required for demonstration of compliance with Title 24, Part 6: Certificate of Compliance, Certificate of Installation, Certificate of Acceptance, Certificate of Verification.

Compliance Registration Package means digitally signed or encrypted digital data that is transmitted to or from a Data Registry that contains the data required for registering a Compliance Document with a Data Registry, including the Compliance Data Exchange File. A commonly used method is the Zip file format, a data compression and archiving specification that is in the public domain. Files transmitted to or from a Data Registry using the Zip file format shall be password protected as described in JA7.6.3.2.7.

Compliance Report Generator is a web service maintained by the Commission that receives standardized document data exchange files from third party software approved by the Commission and produces the document registration package required to complete registered compliance documents in data registries that are approved by the Commission.

Compliance Software is software approved by the California Energy Commission for use in demonstrating compliance with the performance standards in Title 24, Part 6.

Cryptographic Hash Function is a mathematical function that creates a unique number that represents the contents of a block of data or text. In digital signature processing the data or text that the user is digitally signing is called the message. The number generated by the cryptographic hash function is called the message digest. To verify a copy of the message, the cryptographic hash function is applied to both the original message and the copy of the message,

and the resulting message digests are compared. If they are both the same, then the copy is valid.

There is a number of cryptographic hash functions used in digital signature processing. All major development environments such as Microsoft and Adobe support the most commonly used hash algorithm family, SHA-1, SHA-256, SHA-384, SHA-512 hash algorithms which were developed by National Security Agency (NSA).

Data Registry is a web service with a user interface and database maintained by a Registration Provider that complies with the applicable requirements in Appendix JA7, with additional guidance from the Data Registry Requirements Manual, and provides for registration of residential or nonresidential compliance documentation used for demonstrating compliance with Title 24, Part 6.

Residential Data Registry is a Data Registry that is maintained by a HERS Provider, that provides for registration, when required by Title 24, Part 6, of all residential compliance documentation and the nonresidential Certificate of Verification.

Nonresidential Data Registry is a Data Registry that is maintained by a Registration Provider approved by the Commission, that provides for registration, when required by Title 24, Part 6, of all nonresidential compliance documentation, excluding all Certificates of Acceptance recorded by an acceptance test technician certification provider (10-103.1 and 10-103.2). However, nonresidential data registries may not provide for registration of nonresidential Certificates of Verification.

Data Registry Requirements Manual is a document that provides additional detailed guidance regarding the functional and technical aspects of the Data Registry requirements given in Appendix JA7.

Digital Certificate is a computer-based record that contains a person's identifying information and the person's digital signature public key, as well as information about the certificate authority that issued the Digital Certificate and the certificate authority's digital signature verifying the authenticity of the person's identity and digital signature. Although California Code of Regulations, title 2, section 22003(a)(2)(C) states "although not all digitally signed communications will require the signer to obtain a certificate, the signer is capable of being issued a certificate to certify that he or she controls the key pair used to create the signature."

External Digital Data Source (EDDS) is a data transfer service approved by the Energy Commission to operate in conjunction with an approved Data Registry that allows authorized users of a Data Registry to transfer data from a digital data source external to the Data Registry as an alternative to the key-in data entry described in JA7.7.1.1 for registering compliance documents as required by Title 24 Part 6.

External Digital Data Source (EDDS) Provider is an organization that administers an EDDS that conforms to the requirements in Appendix JA7 with additional guidance given in the Data Registry Requirements Manual.

Digital Signature an electronic signature that incorporates cryptographic methods of originator authentication, allowing the identity of the signer and the integrity of the data to be verified. The

regulations adopted by the Secretary of State that govern the use of Digital Signatures for use by public entities in California are found in the California Code of Regulations, Title 2, Division 7, Chapter 10 Digital Signatures.

Documentation Author is a person who prepares a Title 24, Part 6 compliance document that must subsequently be reviewed and signed by a responsible person in order to certify compliance with Part 6.

Electronic Signature is a "computer data compilation of any symbol or series of symbols executed, adopted, or authorized by an individual to be the legally binding equivalent of the individual's handwritten signature." (21 C.F.R. § 11.3.)

For the purposes of using electronic signatures to sign compliance documents, the electronic signature shall be an electronic image of the signer's handwritten signature.

Executive Director means the Executive Director of the Energy Commission.

Field Technician is a person who performs acceptance tests in accordance with the specifications in Appendix ~~NA7, and~~NA7 and reports the results of the acceptance tests on the Certificate of Acceptance in accordance with the requirements of Section 10-103(a)4.

HERS is the California Home Energy Rating System as described in California Code of Regulations, title 20, sections 1670 et seq.

HERS Provider is an organization that administers a home energy rating system as described in California Code of Regulations, title 20, sections 1670 et seq.

HERS Rater is a person who has been trained, tested, and certified by a HERS Provider to perform the field verification and diagnostic testing required for demonstrating compliance with the Title 24, Part 6, as described in California Code of Regulations, title 20, sections 1670 et seq.

HERS Provider Data Registry is a Data Registry maintained by a HERS Provider.

Login (see Secure Login).

Message is a block of data or text that has been digitally signed.

Message Digest is the unique number generated when a Cryptographic Hash Function is applied to the Message which is the data or text that is digitally signed.

Password is a string of characters used for authenticating a user on a computer system.

Personal Computing Device includes desktop computers, laptops, smartphones, and tablets

Private Key is one of the keys in Asymmetric Key Encryption used in a Digital Signature. As its name implies, the Private Key should only be known to the owner of the Digital Signature. The private key is used to encrypt the Message Digest of the message that the user digitally signed.

Public Key is one of the keys in Asymmetric Key Encryption used in a Digital Signature. As its name implies, the Public Key must be made public to receivers of digitally signed documents in order to decrypt the Message Digest.

Registered Compliance Document is a compliance document that has been submitted to a residential or nonresidential Data Registry for retention, verified as valid with an XML schema

approved by the Commission, and has gone through the registration process so that the Registered Document displays all applicable electronic signatures as well as the Registration Provider's digital certificate and the document's unique registration number. The image of the registered document is accessible for printing or viewing by authorized users of the Data Registry via the Registration Provider's internet website. The registered document's unique visible registration number is appended onto the document image by the Data Registry.

A Registered Document meets all applicable requirements in Standards Section 10-103(a) and Appendix JA7. Refer to the Data Registry Requirements Manual for additional guidance.

Registration is the process applicable to electronic Compliance Documents that are verified as complete by the Data Registry, and are electronically signed by all required Data Registry Authorized Users. Registration is initiated when an authorized Registration Signer signs the Compliance Document electronically where subsequently the Data Registry adds the Registration Signer's Electronic Signature to the signature block, appends a unique Registration Number to each page of the document, and then applies the Registration Provider's Digital certificate issued by a Certificate Authority approved by the California Secretary of State to the Compliance Document and displays the Registration Provider's digital signature appearance following the registration signers signature block. When Registration is complete, the Data Registry immediately and automatically transmits a copy of the completed Registered Compliance Document and Compliance Registration Package to the Commission Compliance Document Repository and also retains a copy of the Registered Compliance Document for use by authorized users for submittals.

Registration Number is an alphanumeric sequence of digits and delimiters appended to a Compliance Document when the document's Registration Signer provides his or her Electronic Signature to the Data Registry to complete Registration for any document. Each Registration Number shall be unique to only one document. The registration numbering convention utilizes specific digits to reference the document type, revision level, and the parent-child relationships between the compliance documents in a specific project.

Registration Provider is an organization that administers a Data Registry service that conforms to the requirements in Appendix JA7, with additional guidance given in the Data Registry Requirements Manual.

Registration Signer is a Responsible Person as defined in Title 24, Part 1, chapter 10, Sections 10-103(a)1, 10-103(a)3, 10-103(a)4, or 10-103(a)5 who has established a user account with a Data Registry and has provided sufficient evidence to the Registration Provider to qualify for the authorization to register applicable compliance documentation by providing an electronic signature. The Documentation Author or Field Technician, and Registration Signer on a compliance document may be one and the same person or they may be different persons.

Secure Login means the unique Username and Password given to an Authorized User for maintaining the security of the Data Registry.

Standards means the California Building Energy Efficiency Standards, codified in the California Code of Regulations, title 24, part 1, chapter 10, and part 6.

Standards Data Dictionary (SDD) is a dictionary that contains all data and technical terms used to describe building components, equipment, attributes and measurements that are regulated by the Standards. The purpose of the SDD is to provide the vocabulary that is used in expressing standards as well as published compliance documentation.

URI stands for Uniform Resource Indicator which is a standard for identifying a name or a resource on the Internet.

URL stands for Uniform Resource Locator is a type of URI used to identify locations on the World Wide Web.

Username is a name that uniquely identifies someone on a computer system. The Username is paired with a Password to create a Secure Login.

W3C stands for World Wide Web Consortium which is an international standards body that develops standards for the World Wide Web.

XML stands for Extensible Markup Language and is a set of rules for encoding documents in machine-readable form to facilitate the electronic transmission of documents. XML standard was developed by the W3C.

XML Schema refers to XML Schema Definition Language, commonly referred to as XSD, which is another standard defined by the W3C. An XML schema uses XSD to define a set of rules to which an XML document must conform in order to be considered valid according to that schema. The rules can include definition of major organizational units, definition of data elements and attributes data types, constraints on valid values such as upper and lower bounds, and whether data is required or optional.

XSL-FO stands for Extensible Stylesheet Language Formatting Objects and is a standard of the W3C for representing content from an XML document. It is based on a standard vocabulary of document plus formatting and layout directives that can be interpreted by a computer application called an FO processor. XSL-FO is commonly used as an intermediary to generate PDF and printable documents.

XSLT stands for Extensible Stylesheet Language Transformation which is a standard from the W3C for translating an XML document into another format such as XSL-FO or HTML.

JA7.3 Introduction

A Data Registry is a web service with a user interface and database maintained by a Registration Provider that provides for registration of residential or nonresidential compliance documentation used for demonstrating compliance with Part 6. Data Registries shall conform to the requirements specified in Appendix JA7. Refer to the Data Registry Requirements Manual for additional guidance.

A Data Registry shall include the minimum functional features specified by Appendix JA7.

Document registration is the process for verifying, serializing, and signing electronic compliance documents produced using a method approved by the Commission. Approved Data Registries are the entities that implement and manage the procedures for registering documents. The procedures include authenticating and approving users to submit or sign electronic documents and data for registration, validating that these data and documents are completed in conformance with the requirements defined by the Standards Section 10-103(a) and Appendix JA7, and affixing the electronic signature of the Documentation Author. The registration process is completed only when an authorized registration signer signs the compliance document electronically; whereupon the Data Registry automatically performs the following actions:

(a) Adds the registration signer's electronic signature to the document's signature block.

(b) Appends a unique registration number to each page of the document.

(c) Applies the Registration Provider's digital certificate containing their digital signature to the entire compliance document.

(d) Displays the Registration Provider's digital signature in the signature block that includes a date and time stamp corresponding to the date and time of the document registration process conclusion.

(e) When the document registration process has concluded, the Data Registry shall immediately and automatically transmit a copy of the completed Registered Compliance Document and Compliance Registration Package to the Commission Compliance Document Repository.

(f) The Data Registry shall also retain a copy of the Registered Compliance Document for use by authorized users for submittals.

Paper copies of Registered Compliance Documents printed directly from the Data Registry website, or electronic copies downloaded from the Data Registry website shall be used for submittal to enforcement agencies or other parties to the building construction project.

The Registration Provider's digital signature provides for automatic electronic verification of the authenticity of electronic copies of registered documents.

The electronic copies of the registered documents and Compliance Registration Packages retained by the Commission Compliance Document Repository shall be utilized to satisfy public information requests, perform research, and shall be maintained in a manner conforming to

Evidence Code sections 1530-1532 (in the custody of a public entity) for use in enforcement of the Standards.

Any person or entity wishing to have a Data Registry approved shall submit an application to the Energy Commission. Data Registries may be approved by the Energy Commission or by the Executive Director to provide document Registration services. Data Registries shall conform to the requirements of Appendix JA7. Refer to the Data Registry Requirements Manual for additional implementation guidance

.

JA7.4 Roles and Responsibilities, and Authorized Users

This section summarizes the roles and responsibilities for the individuals who participate in the document registration procedures administered by a Data Registry. However, this section is not a complete accounting of the responsibilities of the respective parties.

JA7.4.1 Registration Provider

A Registration Provider is an entity that has been approved by the Energy Commission to provide Data Registry services. Registration Providers maintain Data Registries that conform to the requirements in Appendix JA7, with additional guidance specified in the Data Registry Requirements Manual. Registration Providers are required to retain completed Registered Compliance Documents and Compliance Registration Packages and make copies of the registered documents available to authorized users for submittals to enforcement agencies or to other parties to the building project that require the documents. Registration Providers make services available that enable authorized users of their Data Registry to verify the authenticity of paper and electronic copies of the retained registered documents.

In order to facilitate Commission oversight of a Registration Provider's documentation processes, the Registration Providers shall grant authorization to Energy Commission staff to view the data and documents retained in the Data Registry, and shall provide functionality that allows Energy Commission staff to query and download retained data or documents.

For residential compliance document registration, the Registration Provider shall be approved in accordance with the requirements in Section JA7.8, and shall also be a HERS Provider approved by the Energy Commission.

For nonresidential compliance document registration, the Registration Provider shall be approved in accordance with the requirements in Section JA7.8.

The Registration Provider shall only use XML Schema approved by the Commission in a nonresidential data registry.

JA7.4.2 Authorized Users

Authorized users are persons who have established a user account with a Data Registry and are required to provide their correct username and password in order to access the secured information in that Data Registry. Data Registry authorized users may be required to provide proof of professional licensure, professional certification, or other qualifying information as a condition for receiving authority to access records or provide signatures for certain types of documentation. User accounts shall be established for each Data Registry for which a user must gain access.

The information required to establish a user account with a Data Registry shall be determined by the Registration Provider who shall gather and verify any and all information necessary to validate a user applicant's identity or applicable professional qualifications as prerequisite to

authorizing assignment to a user applicant an electronic signature, or permissions as a documentation author, or permissions as a registration signer.

Authorized Users may not share their Secure Login with any other individual for any purpose. Violation of this policy may constitute fraud, and can be cited as a reason for denial of access for all the persons involved, including the user who releases their Secure Login to another person or persons, and the person or persons who use the Secure Login to gain access the Data Registry.

The roles and responsibilities in the remainder of this section JA7.4 describe specific types of authorized users of the Data Registry.

Refer to the Data Registry Requirements Manual for additional guidance regarding user accounts and authorized users.

JA7.4.3 View-Only Authorized User

Data Registries may provide user accounts that allow users to view only certain records. These types of accounts may allow access to records to view, print or download copies of compliance documents in order to validate the information submitted to enforcement agencies on paper copies of registered documents, and for determining the status of completion of the full documentation package for a project.

JA7.4.4 Documentation Author

Documentation Authors are persons who prepare Title 24, Part 6 compliance documents that must subsequently be reviewed and signed by a Registration Signer (responsible person) in order to certify compliance with Part 6.

Documentation Authors assist with input of information required to complete the compliance documents required for the registration procedures in a Data Registry. Documentation authors who provide support for preparation of compliance documents in a Data Registry shall establish a user account and an electronic signature authority with the Data Registry. Documentation Authors shall sign the documents they prepare, but documentation author signatures do not indicate or assume responsibility for the truth or validity of the information reported on a compliance document. Documentation Authors may engage in business relationships with the Registration Signers they assist, or they may be employees of the Registration Signers they assist.

JA7.4.5 Field Technician

The Field Technician is responsible for performing the acceptance test procedures and documenting the results of the acceptance tests on a Certificate of Acceptance. The Field Technician shall sign the Certificate of Acceptance to certify that the information he reports on the Certificate of Acceptance is true and correct. When registration of a Certificate of Acceptance is required, the Field Technician shall establish a user account and an electronic signature authority with the Data Registry in order to provide electronic signatures to complete the Certificate of Acceptance. When a Field Technician also performs the data input to prepare the Certificate of Acceptance documentation, the Field Technician shall also provide the documentation author signature on the Certificate of Acceptance. The Field Technician may be, but is not required to be the installer of the system that requires Acceptance Testing. Field

Technicians shall be certified Acceptance Test Technicians (ATT) when required by Sections 10-103.1 or 10-103.2.

JA7.4.6 Registration Signer (Responsible Person)

The Registration Signer is the person responsible for the work identified on a compliance document (Certificate of Compliance, Certificate of Installation, Certificate of Acceptance, or Certificate of Verification).

(a) **For Certificate of Compliance documentation**, the Registration Signer shall be eligible under Division 3 of the Business and Professions Code to accept responsibility for the building design.

(b) **For Certificate of Installation documentation**, the Registration Signer shall be eligible under Division 3 of the Business and Professions Code to accept responsibility for the building construction or installation in the applicable classification for the scope of work identified on the document.

(c) **For Certificate of Acceptance documentation**, the Registration Signer shall be eligible under Division 3 of the Business and Professions Code to accept responsibility for the system design, construction or installation in the applicable classification for the scope of work identified on the document.

(d) **For Certificate of Verification documentation**, the Registration Signer shall be a certified HERS Rater.

The Registration Signer shall provide a signature to certify that the information reported on a compliance document for which he is responsible is true and correct. When registration of a compliance document is required, the Registration Signer shall establish a user account and an electronic signature authority with the Data Registry. When a Registration Signer also performs the data input to prepare a compliance document, the Registration Signer shall also provide the documentation author signature on the compliance document.

JA7.4.7 Enforcement Agency

Standards Section 10-103(d) requires the Enforcement Agency to verify that all required compliance documents for a project are completed, signed, and submitted or posted as required by Standards Section 10-103(a). Thus, when Section 10-103(a) requires that a compliance document be registered with a Data Registry, the Enforcement Agency must verify that compliance documents submitted when applying for a permit, or posted in the field are registered documents. Such enforcement agency verification shall be by any valid means the Enforcement agency considers satisfactory.

Enforcement Agency persons may establish user accounts with data registries to enable viewing the compliance documents for projects for which their jurisdiction has enforcement authority.

Enforcement Agencies may be authorized to enter notations into project records in data registries to communicate plan check and field inspection information to builders, designers, installers, raters, and other parties to the project.

JA7.4.8 Commission Oversight

At any time, Commission staff may request access to those documents and associated Compliance Registration Package that a Registration Provider is required to maintain pursuant to Title 24, Part 1; Title 24, Part 6; or Appendix JA7. Upon receipt of a request for access, a Registration Provider shall provide Commission staff with copies of, or access to, those documents and associated Compliance Registration Package specified in the request within 30 days of receipt of the request, unless granted an extension by Commission staff.

If a Registration Provider fails to provide Commission staff with copies of, or access to, those documents and associated Compliance Registration Package, the Registration Provider shall explain in writing, fully and concisely, the basis for their failure to provide access or copies of those documents and associated Compliance Registration Package.

If a Registration Provider fails to comply with this or any other provision of Appendix JA7, Commission staff may initiate a review of the Registration Provider's Data Registry approval pursuant to JA 7.8.4.2.

This subsection shall not be construed to limit existing enforcement oversight authority by Commission staff pursuant to any other provision of Appendix JA7.

JA7.5 Document Registration Requirements

JA7.5.1 Overview

All compliance documents for which registration is required shall be produced by a method approved by the Commission and then registered with an approved Data Registry by authorized users of the Data Registry. Procedures for submittal of required documentation to enforcement agencies and other parties to the building construction project are given in Reference Residential Appendix RA2, and Reference Nonresidential Appendices NA1. Standards Section 10-103(a) defines the administrative requirements for the compliance documents (Certificate of Compliance, Certificate of Installation, Certificate of Acceptance, and Certificate of Verification).

Compliance document layouts shall be defined by standardized data structures implemented according to the requirements given in JA7.7. Compliance documents produced by the Data Registry shall conform to the applicable informational content and graphical layout formatting approved by the Energy Commission.

The Data Registry shall be capable of tracking all compliance documentation and maintaining the correct associations between related documents within a building project. Any revisions to compliance documents shall be tracked and reported.

The Data Registry shall ensure that registered documents are retained such that they are available to authorized users for submittals to enforcement agencies or other parties to the building construction project that require copies of the Registered Compliance Documents.

Contingent upon the availability of a Commission Compliance Document Repository, the Data Registry shall immediately and automatically, upon concluding the registration of compliance documents, transmit a copy of each Registered Compliance Document and Compliance Registration Package to the Commission Compliance Document Repository in a manner prescribed by the Energy Commission.

JA7.5.2 Document Appending

The compliance document informational content, graphical layout, and formatting used by the Data Registry shall conform to the standardized document layouts and data structures approved by the Energy Commission as further described in Section JA7.7. Refer to the Data Registry Requirements Manual for additional guidance. The Data Registry shall be capable of receiving electronic compliance document images and data produced by the methods approved by the Energy Commission such as by approved performance compliance software, and shall be capable of appending the received compliance document images and data with additional information received from authorized users according to the requirements in Sections JA7.5, JA7.6, JA7.7, and with additional guidance given in the Data Registry Requirements Manual.

Electronic document layout designs implemented according to the requirements in JA7 shall include specifications for coordinate locations and positions where the Data Registry will affix the Registration Signer's Electronic Signatures, registration numbers, registration date and time

record information and Registration Provider's logos and watermarks. Refer to the Data Registry Requirements Manual for additional guidance.

The following conventions shall be enforced:

JA7.5.2.1 Registration Number

The registration number for a multiple-page document shall be visible on all pages of the document.

JA7.5.2.2 Registration Date and Time

The registration date and time shall reflect the point in time corresponding to the submittal of the electronic certification signature by the person responsible for the information on the document. The format for the registration date and time record shall be calendar date (year-month-day) with time of day (hour-minutes-seconds). Hour of the day shall utilize 24-hour format. Refer to the Data Registry Requirements Manual for additional guidance.

JA7.5.2.3 Performance Compliance Software Calculation Date and Time

The performance compliance calculation date and time information that is generated by the compliance software tool shall be retained as data in the record for the registered Certificate of Compliance document in the Data Registry.

The date and time information for the compliance calculation for a multiple-page performance Certificate of Compliance document shall be visible on all pages of the compliance document.

JA7.5.2.4 Electronic Signatures

Registered documents shall be electronically signed by the documentation authors, and by the persons who are eligible to assume responsibility for the documentation as specified by Standards Section 10-103(a) and who are authorized users of the Data Registry who have established an electronic signature authority with the Data Registry. The Registration Provider shall ensure that all required electronic signature features and procedures specified in Section JA7.6 are implemented and enforced. The electronic signature layouts and locations shall be consistent with the document layouts approved by the Energy Commission. Refer to the Data Registry Requirements Manual for additional guidance.

JA7.5.2.5 Digital Signatures

The Registration Provider shall ensure that the required digital signature procedures specified in Section JA7.6 are enforced. Refer to the Data Registry Requirements Manual for additional guidance.

JA7.5.3 Data Validation for Compliance Document Registration

Data Registries shall have the capability to automatically perform validation of data entered by a documentation author to complete a compliance document as required by the document data validation procedures in Section JA7.6.3.2.2.

There shall be a data validation rule set specific to each compliance document.

Refer to the Data Registry Requirements Manual for additional guidance.

Compliance document data validation rules may be implicit in the formatting of the data elements that define a compliance document for data exchange processes, or data validation rules may be implemented by the Data Registry software.

Data validation rules or specifications may be defined in the XML schema that represents the compliance data for a compliance document as further described in Section JA7.7. Validation criteria such as whether data is required or optional, the required data type, the data numeric upper and lower bounds, acceptable enumeration values, calculations that must be performed, etc., shall be defined in the XSD file.

Refer to the Data Registry Requirements Manual for additional guidance on the methods for validation of the data taking into consideration the specifications for the data elements for the data exchange processes described in Section JA7.7.

The Data Registry may flag data entry errors at any time during data entry, however all data validation shall be completed prior to allowing a documentation author signature action to be completed. Documents shall not be marked as ready for registration signing unless all required data validation errors have been corrected, and a documentation author signature action has been completed successfully.

The following conventions shall be enforced as a condition for registration of a document:

JA7.5.3.1 Null Entries

When completion of a compliance document requires data entry for an information field, the data shall be entered, otherwise registration shall not be allowed. However, if data entry for a particular information field is optional, use of a null entry or symbol such as n/a that is allowed by the document schema shall not prevent registration from concluding.

JA7.5.3.2 Calculated Values

Whenever possible or practical, the Data Registry shall perform the calculations required for determining compliance results. Refer to the Data Registry Requirements Manual for additional guidance on these calculations.

JA7.5.3.3 Look-up Functions for Calculations

Whenever possible or practical, the Data Registry shall use lookup functions that provide values needed for completing calculations as referenced from the applicable protocols in the Reference Appendices or from Standards compliance criteria. Guidance for application of lookup functions may be given in the Data Registry Requirements Manual.

JA7.5.4 Registration Numbering Conventions

Registration numbers used for the document registration procedures described in Appendix JA7 are alphanumeric sequences of digits and delimiters that shall be appended to a compliance document when the document's registration signer performs an electronic signature action in the Data Registry to conclude the registration procedure for a document. Each registration number

shall be unique to only one document. The registration numbering convention assigns significance to certain digits in order to define the document type, document revision level, and the parent-child relationships between the compliance documents contained in a project. As the compliance document types required for residential projects are different than those required for nonresidential projects, the numbering conventions used shall conform to the conventions specified in sections JA7.5.4.1 and JA7.5.4.2 respectively.

Registration numbering conventions for other documentation processes are possible. Any new document process for which the Commission requires the documents to be registered shall use a registration numbering convention that is approved by the Commission.

JA7.5.4.1 Nonresidential Registration Numbering Convention

Contingent upon approval of nonresidential Data Registries, a nonresidential registration numbering convention shall be determined and approved by the Commission in conjunction with the approval of the first nonresidential Data Registry, and shall be used by all nonresidential data registries thereafter. The nonresidential registration numbering convention specification shall use a similar design concept as used in the residential registration numbering convention described in Section JA7.5.4.2 which assigns significance to digits in order to define the document type, document revision level, and the relationships between the compliance documents contained in a project. Refer to the Data Registry Requirements Manual for additional guidance on the layout, configuration, and application of the approved nonresidential registration numbering convention.

JA7.5.4.2 Residential Registration Numbering Convention

The registration numbers assigned to residential compliance documents by the Data Registry at the conclusion of the registration process shall use standardized numbering convention to assign the applicable significance to the alphanumeric digits to define the unique document designation, document revision level, and establish the parent/child relationships between the documents contained in a project.

Refer to the Data Registry Requirements Manual for additional guidance on this standardized convention, as well the layout, configuration, and application of the approved residential registration numbering convention.

JA7.5.5 Verification of Authenticity of Copies of Registered Documents

For projects for which Standards Section 10-103(a) requires the documents to be registered, compliance requires that documents shall first be registered with a Data Registry before being submitted to an enforcement agency for approval. Additionally, when revisions to the compliance documents are necessary, compliance requires the revised documents to be registered with the Data Registry prior to re-submittal to the enforcement agency for approval. Thus, the current revision of a registered document in the Data Registry shall be the reference document for validation of the authenticity of a document submitted to an enforcement agency or to another party to the construction project.

Registration Providers shall make available document verification services to authorized users of their Data Registry.

Methods for verification of a document's authenticity shall include basic visual comparison of a copy of a registered document to the current version of the registered document on file in the Data Registry.

Additionally, the automated document validation utility that is made possible by digital signature technology shall make it possible for a document recipient to automatically verify an electronic copy of a registered compliance document without having to manually inspect it against the registered document in the Data Registry. As described in Section JA7.3, the last step in the document registration procedure in the registry applies the Registration Provider's digital certificate containing their digital signature to the entire compliance document, thus providing the capability for automated verification of authenticity of electronic copies of the registered document.

Refer to the Data Registry Requirements Manual for additional guidance on digital signature technology for verification of document authenticity.

JA7.5.6 Project Document Configuration

Data Registries shall be capable of tracking all compliance documentation and maintaining the correct associations between related documents, including revisions and completion statuses for all documents within a building project.

A certificate of compliance establishes the requirements for project documentation for prescriptive and performance compliance methods.

The Standards specify mandatory HERS verification for residential projects for which there are options for compliance with the mandatory requirement. Thus, indication of the option selected for compliance with a residential mandatory measure may not be known until after a Certificate of Installation is submitted to a Data Registry to demonstrate compliance with the mandatory requirement. The Data Registry shall track when Certificate of Installation documents are registered for any mandatory measure that has an option for compliance; shall report any HERS verification requirement that is triggered by the mandatory measure; and ensure that any required HERS verification is completed as a condition of compliance. Refer to the Data Registry Requirements Manual for additional guidance describing residential Data Registry tracking of mandatory measure options and the required documentation for the mandatory options.

JA7.5.6.1 Project Status Reports

The status of completion of a project shall be reported by the Data Registry.

The Data Registry shall determine the documents required for a project based on the Certificate of Compliance and maintain a project status report with a summary of the current status of completion of the required documents for the project. The project status report shall be readily accessible to authorized users of the Data Registry. Access to the report shall be facilitated by use of search parameters relevant to the project as listed in Sections JA7.5.6.1.1 and JA7.5.6.1.2.

Enforcement Agencies may be authorized to enter notations into project records in data registries to communicate plan check and field inspection information to builders, designers, installers, raters and other parties to the construction project.

The project status report shall be made available in a printable format.

Minimum information requirements for the project status report shall include the following:

JA7.5.6.1.1 Project Status Report Information for Residential Projects:

(a) Project name

(b) Project location (or address)

(c) Listing of the Certificate of Compliance documents required; date registered (or indicate not complete if the document record has been started but is not yet registered); registration number

(d) Listing of the Certificate of Installation documents required; date registered (or indicate not complete if the document record has been started but is not yet registered); registration number

(e) Listing of the Certificate of Verification documents required; date registered or indicate not complete if the document record has been started but is not yet registered); registration number

(f) Listing of the mandatory measure options required; options selected (refers to the Certificate of Installation and Certificate of Verification documentation).

JA7.5.6.1.2 Project Status Report Information for Nonresidential Projects:

Note: Nonresidential Document registration is contingent upon approval of a nonresidential Data Registry by the Commission.

(a) Project name

(b) Project location (or address)

(c) Listing of the Certificate of Compliance documents required; date registered (or indicate not complete if the document record has been started but is not yet registered); registration number

(d) Listing of the Certificate of Installation documents required; date registered (or indicate not complete if the document record has been started but is not yet registered); registration number

(e) Listing of the Certificate of Acceptance documents required; date registered (or indicate not complete if the document record has been started but is not yet registered); registration number

(f) Listing of the Certificate of Verification documents required; date registered (or indicate not complete if the document record has been started but is not yet registered); registration number.

JA7.5.6.2 Revision Control

When a revision to a compliance document is made, the revised version of the compliance document shall also be registered (a registration signer must sign again to register the revision),

and the revision digit for the compliance document shall be incremented. Thus a copy of each registered revision of each Registered Compliance Document and the associated Compliance Registration Package shall be transmitted to the Commission Compliance Document Repository.

When a revision is made to a compliance document that is associated with one or more registered dependent (child) documents, the dependent documents shall have their registered status revoked, and their status shall be reported as incomplete (orphaned) until signed again by the registration signer subsequent to making any necessary changes to the "orphaned child" document made necessary by the revision of the applicable dominant (parent) document. A new registration signature is required for the orphaned child document in order to update the registration number such that the new revision level of both the parent and the child documents is shown.

A copy of the new revision of a document shall be submitted to the enforcement agency for all applicable approvals or inspections.

The data that was used to create obsolete versions of Registered Compliance Documents and the associated Compliance Registration Package shall not be required to be retained in the Data Registry history or memory. However, a copy of each revision of each registered electronic document shall be retained.

The current revision of any document in the registry shall be considered to be the only valid version of that document. All previous revisions of that document shall be considered obsolete, thus not valid for use for submittal to enforcement agencies to demonstrate compliance.

JA7.5.7 Certificate of Compliance Requirements

JA7.5.7.1 Prescriptive Certificate of Compliance Document

Procedures for submittal of prescriptive Certificate of Compliance data shall conform to the requirements in Section JA7.7.1. Refer to the Data Registry Requirements Manual for additional guidance on procedures and requirements for Data Registry features for prescriptive certificate of compliance document registration.

JA7.5.7.2 Performance Certificate of Compliance Document:

Procedures for submittal of the performance Certificate of Compliance shall use Compliance Software approved by the Commission pursuant to all applicable procedures in Title 24 Part 1, Section 10-109, and shall conform to all applicable data exchange requirements given in Section JA7.7.

JA7.5.7.3 Multiple Orientation Plans (Residential)

The Data Registry shall ensure that multiple orientation performance Certificate of Compliance documents are configured in the Data Registry such that the registered multiple orientation Certificate of Compliance document is referenced for all build-outs of that master plan. The registered Certificate of Compliance that was approved by the enforcement agency shall be the Certificate of Compliance document that is the parent document for each and every dwelling unit built from that master plan.

Refer to the Data Registry Requirements Manual for additional guidance describing the procedures for tracking revisions to multiple orientation Certificate of Compliance Documents.

JA7.5.7.4 Multifamily Dwelling units

The Data Registry shall ensure that multifamily whole-building performance Certificate of Compliance documents are configured in the Data Registry such that the registered multifamily Certificate of Compliance document is referenced for all dwelling units in the multifamily building. The registered Certificate of Compliance that was approved by the enforcement agency shall be the Certificate of Compliance document that is the parent document for each and every dwelling unit specified by that whole-building certificate of Compliance document.

Detailed guidance describing the procedures for tracking revisions to multifamily whole-building Certificate of Compliance Documents may be given in the Data Registry Requirements Manual.

JA7.5.8 Certificate of Installation Requirements

JA7.5.8.1 Residential Certificate of Installation

Procedures for submittal of residential Certificate of Installation data shall conform to the requirements in Section JA7.7.1. Detailed guidance for the functional and technical elements necessary for registration of residential Certificate of Installation documents for a Data Registry may be given in the Data Registry Requirements Manual.

JA7.5.8.2 Nonresidential Certificate of Installation

Nonresidential Certificate of Installation document registration is contingent upon the approval of nonresidential Data Registries.

Procedures for submittal of Nonresidential Certificate of Installation data shall conform to the requirements in Section JA7.7.1. Detailed guidance for the functional and technical elements necessary for registration of Nonresidential Certificate of Installation documents for a Data Registry may be given in the Data Registry Requirements Manual.

JA7.5.9 Certificate of Verification Requirements

Certificate of Verification documents are always registered documents.

Procedures for submittal of Certificate of Verification shall conform to the requirements in Section JA7.7.1. Detailed guidance for the required functional and technical elements necessary for registration of Certificate of Verification documents for a Data Registry may be given in the Data Registry Requirements Manual.

JA7.5.9.1 Managing Sample Groups

HERS Provider Data Registries are required to manage the group sampling procedures. Details that describe the requirements for managing sample groups are given in Reference Residential Appendix RA2 and in Reference Nonresidential Appendix NA1.

JA7.5.9.2 Group Numbering Convention

Group number is a HERS Provider-designated identification number unique to the sample group to which a dwelling has been assigned. The group numbers assigned to residential compliance documents by the Data Registry at the conclusion of the registration process shall use the standardized numbering convention published in the Data Registry Requirements Manual approved by the Energy Commission. The group number shall be reported on all Certificate of Verification documents that utilize group sampling for compliance. Guidance for the layout, configuration, and application of the approved residential group numbering convention shall be maintained in the Data Registry Requirements Manual.

JA7.5.10 Certificate of Acceptance Requirements

Certificate Acceptance document registration is contingent on the approval of nonresidential Data Registries.

Procedures for submittal of Certificate Acceptance data shall conform to the requirements in Section JA7.7.1. Detailed guidance for the required functional and technical elements necessary for registration of Certificate of Acceptance documents for a Data Registry may be given in the Data Registry Requirements Manual.

JA7.6 Electronic and Digital Signature Requirements

JA7.6.1 Introduction

This section defines the functional and technical requirements for the use of electronic and digital signatures in the registration of compliance documents. These specifications shall be implemented by a Data Registry as a condition of approval of the Data Registry by the Commission.

JA7.6.2 Overall Description

JA7.6.2.1 Interfaces - Main Users

(a) **Authorized Users** of Data Registries who must sign Compliance Documents either as the Documentation Author, or Field Technician, or as the Registration Signer (responsible person).

(b) **Registration Providers** who must implement the electronic and digital signature specifications into the Data Registry user interface to provide Electronic Signature capabilities to the Authorized Users of the Data Registry, and must append their digital signature to all registered compliance documents created in their Data Registry.

(c) **Commission Compliance Document Repository** which must receive Registered Compliance Documents and Compliance Registration Packages transmitted from the Data Registries and will process the digital signature to validate the sender and the contents.

(d) **Persons or Software Entities who Validate Electronic Documents** who may receive electronic copies of registered documents made available by the Data Registries and will process the digital signature to validate the sender and the contents.

(e) **Compliance Software Tools** that export Compliance Documents and Compliance Registration Packages for transmittal to the Data Registries that must subsequently be electronically signed and registered in the Data Registry.

JA7.6.2.2 Major Functions

The electronic and digital signature requirements of the Data Registry consist of the following major functions:

JA7.6.2.2.1 Electronic Signature Capability

The Data Registry shall provide electronic signature capability to authorized users.

JA7.6.2.2.2 Document Data Validation

The Data Registry shall ensure that compliance documents are complete and the data entered conforms to the data validation rules for the applicable document prior to making the documents available for registration signing.

JA7.6.2.2.3 Signer Review and Signature Actions

The Data Registry shall provide functionality for authorized users to select, review, and sign compliance documents as a Documentation Author, Field Technician, or Registration Signer.

JA7.6.2.2.4 Digital Signatures

The Data Registry shall apply the Registration Provider's Digital Signature to compliance documents electronically signed by the registration signer when concluding the document registration procedure in the Data Registry. The Registration Provider's digital signature shall be based on a digital certificate issued by a certificate authority approved by the California Secretary of State.

The function of the Registration Provider's digital certificate is to provide verification from an approved certificate authority that the document came from the Registration Provider's Data Registry and to provide automated document verification to persons or agencies that receive electronic submittals of these registered documents.

Additional guidance for use of digital signatures and digital certificates shall be given in the Data Registry Requirements Manual.

JA7.6.2.2.5 Transmittal to Commission Compliance Document Repository

The Data Registry, upon completion of the registration procedure, shall immediately and automatically transmit a copy of the completed Registered Compliance Document and Compliance Registration Package to the Commission Compliance Document Repository, which will process the Registration Provider's digital signature to validate the sender and the compliance document contents.

Additional guidance for use of digital certificates for validation of document authenticity shall be given in the Data Registry Requirements Manual.

JA7.6.2.2.6 Document and Data Retention

The Data Registry shall retain a copy of the completed Registered Compliance Document and Compliance Registration Packageand make the Registered Compliance Document available for use by authorized users of the registry who may access a copy of the registered document and may subsequently process the Registration Provider's digital signature to verify the sender and the compliance document contents.

JA7.6.2.2.7 Receive and Process Output From Compliance Software and External Digital Data Sources

The Data Registry shall process the completed Compliance Registration Package from Compliance software tools approved by the Energy Commission for use in the Compliance Document Registration process in accordance with the specifications in Section JA7.7.1.6.

If the Data Registry allows use of External Digital Data Sources (EDDS) as an alternative to keyed-in data input for document registration procedures, the requirements in Section JA7.7.1.2 shall be met.

Additional guidance for receiving and processing output from compliance software and EDDS may be given in the Data Registry Requirements Manual.

JA7.6.2.3 User Characteristics

There are four categories of users who will participate in the electronic and digital signature functionality:

JA7.6.2.3.1 Users who will use electronic signatures to sign and register compliance documents.

This is a heterogeneous category composed of HERS Raters, building designers, building contractors, installation contractors, energy consultants, homeowners, and others.

JA7.6.2.3.2 Users who use a digital certificate to secure registered compliance documents.

This category consists of each approved Registration Provider.

JA7.6.2.3.3 Users who will receive the electronically transmitted Registered Compliance Documents and Compliance Registration Packages

These users will need to apply decryption processing using the digital certificate to identify the sender and verify the contents of the received Registered Compliance Document and Compliance Registration Package. The Commission Compliance Document Repository is a main user in this category. Also, users who take advantage of digital signature automated verification capabilities to verify the authenticity of Registered Compliance Document and Compliance Registration Package received as electronic submittals from various other participants in the compliance documentation process will be another main user in this category.

JA7.6.2.3.4 Users who transmit electronic compliance documentation to the Data Registry.

Title 24 compliance software tools are the main users in this Category.

The electronic compliance documents exported from the compliance software tools that are approved by the Energy Commission must be formatted to provide a standardized location for the visible aspects of electronic signatures, digital signature appearances, and other aspects of registration information such as registration numbering, and registration date/time stamps.

The Data Registry shall be capable of appending the visible aspects of electronic and digital signatures and other required registration information to the correct locations in the signature blocks and footers on the imported compliance documents during the subsequent electronic signature and registration procedures.

The Data Registry shall implement the capability to append the visible aspects of the required document registration information to the signature blocks and footers on compliance documents in these locations.

Detailed guidance for appending the required document registration information may be described in the Data Registry Requirements Manual.

JA7.6.2.4 Constraints

JA7.6.2.4.1 Software Constraint:

The digital signature technology including the hash algorithm and asymmetric key encryption used shall be consistent across all Data Registries because the Commission Compliance Document Repository will not support multiple approaches.

Detailed guidance for use of digital signature technology and digital certificates shall be given in the Data Registry Requirements manual.

JA7.6.3 Specific requirements

JA7.6.3.1 Interface Requirements

JA7.6.3.1.1 User interfaces

All Data Registries shall utilize the same informational content, graphical layout and formatting unique to the applicable type of compliance document when displaying the completed compliance documents for review and signing as part of the registration process. These document layouts shall conform to the informational content, graphical layout and formatting approved by the Commission. Additional detailed guidance regarding informational content, graphical layout and formatting will be presented in the Data Registry Requirements Manual.

JA7.6.3.1.2 Software interfaces

JA7.6.3.1.2.1 All Registered Compliance Documents and Compliance Registration Packages transmitted from any Data Registry shall be secured with the Registration Provider digital signature.

JA7.6.3.1.2.1.1 All Data Registries shall use the same hash algorithm to generate the document's message digest for the digital signature.

JA7.6.3.1.2.1.2 All Data Registries shall use the same asymmetrical key encryption for generating the digital signature private and public keys used to encrypt and decrypt the message digest.

JA7.6.3.1.2.1.3 Registration Providers shall provide their digital certificate which contains their digital signature public key to any other software entity that receives Registered Compliance Documents and Compliance Registration Packages from their Data Registry, in particular the Commission document repository.

JA7.6.3.1.2.1.4 The Commission Compliance Document Repository, which will receive Registered Compliance Documents and Compliance Registration Packages electronically from Data Registries, will implement digital signature processing capability in order to perform automatic verification and validation processing on received documents.

JA7.6.3.1.2.1.5 Users who take advantage of automated software capabilities to verify the authenticity of Registered Compliance Documents received from Data

Registries will have to implement digital signature processing capability in order to perform automatic digital signature verification processing on received documents. Numerous PDF reader freeware tools are available that have the capability to process digital signatures that utilize standardized digital signature technology.

JA7.6.3.1.2.2 All Data Registries shall implement the same security protocol for importing completed compliance document transmittals as described in Section JA7.7.1.6.

JA7.6.3.2 Functions

JA7.6.3.2.1 Electronic Signature Capability

The Data Registry shall provide electronic signature capability to authorized users who have the role of Documentation Author, Field Technician, or Registration Signer. A Field Technician Signature is required only on registered Certificate of Acceptance Documentation. A Certificate of Acceptance document requires that there be both a Documentation Author signature and a Field Technician signature prior to registration signing. The Data Registry shall not register a Certificate of Acceptance document that has been recorded (or is expected to be recorded) by an Acceptance Test Technician Certification Provider.

JA7.6.3.2.1.1 Any authorized user of a Data Registry can request an electronic signature in order to sign compliance documents as the documentation author, Field Technician, or as the registration signer.

JA7.6.3.2.1.2 Registration Providers shall gather and verify any and all information necessary to validate a user applicant's identity and applicable qualifications as prerequisite to authorizing assignment to a user applicant an electronic signature, or permissions as a documentation author, Field Technician, or Registration Signer.

JA7.6.3.2.1.3 Authorized users shall provide to the Registration Provider an electronic image of their handwritten signature for use in displaying their electronic signature. The Registration Provider may make available alternative methods for creating an electronic image for displaying electronic signatures.

JA7.6.3.2.2 Document Data Validation

The Data Registry shall check that compliance documents are complete and shall perform the required data validation for the document before making them available for signing and/or registering. Data must be validated with an XML schema approved by the Commission. Additional guidance for the data validation for each document shall be provided in the Data Registry Requirements Manual.

Any applicable error messages shall be posted indicating the actions necessary as prerequisite to completion of the registration process.

JA7.6.3.2.2.1 When a documentation author indicates that the compliance document is complete and he/she is ready to sign it, the Data Registry shall verify that all information

necessary to complete the document has been provided as prerequisite to making the signing functionality available to the documentation author.

JA7.6.3.2.2.2 The Data Registry shall verify that a compliance document is complete and has received the documentation author's signature as prerequisite to making the compliance document available for registration signing. For Certificate of Acceptance documents, both the Documentation Author and the Field Technician signatures shall be provided as prerequisite to making the document available for registration signing. The Data Registry shall not register a Certificate of Acceptance document that has been recorded (or is expected to be recorded) by an Acceptance Test Technician Certification Provider.

JA7.6.3.2.3 Signer Review and Signature Actions

The Data Registry shall provide functionality for authorized users to select, review and sign compliance documents as a documentation author, field technician, or registration signer.

JA7.6.3.2.3.1 The documentation author can electronically sign a compliance document if it has been verified as complete by the Data Registry.

JA7.6.3.2.3.2 The Field Technician can electronically sign a Certificate of Acceptance document if it has been verified as complete by the Data Registry and has the documentation author's signature.

JA7.6.3.2.3.3 The registration signer can electronically sign a compliance document if it has been verified as complete by the Data Registry and has the documentation author's signature. For Certificate of Acceptance documents both the Documentation Author signature and the Field Technician signature are prerequisite to allowing registration signing.

JA7.6.3.2.3.4 When an authorized user selects to sign a compliance document, the Data Registry provides a display of the compliance document layout that allows the user access to any part of the compliance document for review, as well as a display of the declaration statement.

JA7.6.3.2.3.4.1 All compliance documents shall include a declaration statement applicable to the documentation author signature. The declaration statement language shall be approved by the Commission.

JA7.6.3.2.3.4.2 All Certificate of Acceptance documents shall include a declaration statement applicable to the field technician signature. The declaration statement language shall be approved by the Commission.

JA7.6.3.2.3.4.3 All compliance documents shall include a declaration statement applicable to the registration signer signature. The declaration statement language shall be approved by the Commission.

JA7.6.3.2.3.4.4 All compliance document layouts displayed shall conform to the same format, informational order, and content approved by the Commission. Guidance for data and layout specifications shall be published in the Data Registry requirements manual.

JA7.6.3.2.3.5 When the documentation author activates the signing control to sign the compliance document, the Data Registry shall display the completed documentation author signature block including the documentation author's electronic signature utilizing the visible image of his or her hand written signature, applicable professional qualifications, licenses and/or certificates the documentation author holds, and the date and time the document was signed.

JA7.6.3.2.3.6 When the Field Technician activates the signing control to sign the Certificate of Acceptance document, the Data Registry shall display the completed field technician's signature block including the Field Technician's electronic signature utilizing the visible image of his or her hand written signature, applicable professional qualifications, licenses and/or certificates the Field Technician holds, and the date and time the document was signed.

JA7.6.3.2.3.7 When the registration signer activates the signing control to register the compliance document, the Data Registry shall display the completed signature block including the registration signer's electronic signature utilizing the visible image of his or her hand written signature, applicable professional qualifications, licenses or certificates the registration signer holds, the date and time the document was signed, with the newly generated registration number appended to the footer of each of the pages of the document. The registration numbering convention shall conform to the requirements in Appendix JA7.5.4.

JA7.6.3.2.4 Digital Signatures

The Data Registry shall apply the Registration Provider digital signature to compliance documents electronically signed by the registration signer.

The Registration Provider shall ensure that PDF reader freeware can verify the digital signature of the registered PDF documents. The Registration Provider shall make available a procedure that allows users to securely acquire the digital certificate issued by the Data Registry's approved certificate authority. The procedure may add the certificate to the user's local root certificate store if necessary.

JA7.6.3.2.4.1 When a compliance document is electronically signed by the registration signer, the Data Registry shall apply a visible indication of the Registration Provider's digital signature (digital signature appearance) to the document which shall include the following statement:

"Digitally signed by [Data Registry Provider's name]. This digital signature is provided in order to secure the content of this registered document, and in no way implies Registration Provider responsibility for the accuracy of the information".

Other information such as graphic(s), watermark(s), date, or time stamps are not required for the digital signature appearance.

JA7.6.3.2.4.1.1 The Data Registry digital signature software generates a hash number from the contents of the registered compliance document to create the message digest part of the digital signature.

JA7.6.3.2.4.1.2 The Data Registry digital signature software encrypts the message digest using the Registration Provider's digital signature private key to produce the digital signature.

JA7.6.3.2.4.1.3 The Data Registry digital signature software attaches the Registration Provider's digital certificate which contains their digital signature public key to the compliance document.

JA7.6.3.2.4.1.4 The digital signature appearance shall be placed at the end of the compliance document in a location that is just after the responsible person's signature block.

JA7.6.3.2.5 Transmittal to Commission Compliance Document Repository

The Data Registry, upon completion of the registration procedure, shall immediately and automatically transmit a copy of the completed Registered Compliance Document and Compliance Registration Package to the Commission Compliance Document Repository which will process the Registration Provider's digital signature using the Registration Provider's digital certificate to verify the sender and the compliance document contents.

JA7.6.3.2.5.1 The Data Registry shall transmit the digitally signed and Registered Compliance Document and Compliance Registration Package to the Commission document repository using a secure transmission protocol. Detailed guidance for the secure transmission protocol may be specified in the Data Registry Requirements Manual.

JA7.6.3.2.6 Document Retention

The Registration Provider shall retain a copy of the completed Registered Compliance Document and Compliance Registration Package. The Registration Provider shall make the Registered Compliance Document available for use by authorized users of the registry who may print a hard copy, or access an electronic copy of the registered document and may subsequently process the Registration Provider's digital signature using their digital certificate to verify the sender and the compliance document contents.

JA7.6.3.2.6.1 The Data Registry shall provide users the functionality to either view registered documents in their web browser or download the document file to their personal computer.

JA7.6.3.2.6.2 The Data Registry shall provide functionality to transmit electronic copies of registered compliance documents to enforcement agencies or other parties to the construction project.

JA7.6.3.2.6.3 The Data Registry shall make their digital signature public key available for use for electronic validation of the authenticity of the registered documents.

JA7.6.3.2.7 Receive and Process Output From Compliance Software or External Digital Data Sources

The Data Registry shall process the Compliance Registration Package transmitted from Title 24, Part 6 performance compliance software tools approved by the Energy Commission, and shall process transmittals from external digital data sources described in Section JA7.7.1.2 when approved in accordance with the requirements in Section JA7.8 for use in compliance document registration processes.

JA7.6.3.2.7.1 The Data Registry shall have functionality to receive data containing electronic documents and data exported from performance compliance software tools approved by the Energy Commission in accordance with the specifications in Section JA7.7.1.6. If the Data Registry makes available use of External Digital Data Sources (EDDS) as an alternative to keyed-in data input for document registration procedures, the requirements in Section JA7.7.1.2 shall be met.

There may be alternate means by which Compliance Software tools or other external digital data sources communicate with Data Registries, such as by data streaming. Use of such alternate means shall not be allowed unless approved by the Energy Commission.

JA7.6.3.2.7.2 The Data Registry shall have functionality to decrypt data files it receives that contain completed compliance documents exported from compliance software tools that are approved by the Energy Commission in accordance with the requirements in Section JA7.7.1.6..

JA7.6.3.2.7.3 The Data Registry shall only allow the transmission of data between compliance software tools or external data sources approved by the Energy Commission using secure data transfer protocols. Detailed guidance for secure data transfer protocols may be given in the Data Registry Requirements Manual.

JA7.7 Data Exchange Requirements

Compliance documents required by the Administrative Regulations (Title 24, Part 1, §10-103) shall be based on standardized data structures that define their informational content and graphical layout. These data structures shall be represented using the XML data exchange standard developed by the World Wide Web Consortium. The XML data that represents the information entered by users and subsequently displayed in information fields on compliance document images shall be validated against an XML schema that is published in the Data Registry Requirements Manual that is approved by the Energy Commission. The XML schema(s) shall standardize the organization of the data, the terminology, and the data types, thus support data integrity and provide built-in data validation. All electronic data transmittals used for producing compliance documents in Data Registries shall be based on XML technology.

The compliance document images rendered from XML data submitted to the Data Registry shall be consistent with the informational content, graphical layout, and graphical formatting for the compliance documents approved by the Energy Commission.

Detailed Guidance for use of the data definitions defined in the XML schema, and the data formats used to render each of the registered compliance documents shall be provided in the Data Registry Requirements Manual. Consideration shall be given to use of two complimentary XML technologies, Extensible Stylesheet Language Transformation (XSLT) and Extensible Stylesheet Language Formatting Objects (XSL-FO) which shall work directly with the data in the Compliance Data Exchange File to transform the data into the required graphical layout and formatting for the completed compliance document image.

Data registries shall provide web-based services to authorized users to enable user data exchange in accordance with JA7.7.1.

JA7.7.1 Data Exchange for Document Registration Procedures

Data exchange transactions with a Data Registry for document registration procedures shall utilize keyed-in data entry as described in Section JA7.7.1.1; output from approved Title 24, Part 6 Performance Compliance Software as described in Section JA7.7.1.6; or data exchange from an external digital data source as described in Section JA7.7.1.2 that has been approved by the Energy Commission in accordance with applicable requirements specified in Section JA7.8.

Data exchange utilizing software tools/technology or external digital data sources (EDDS) that have not been approved by the Energy Commission shall not be used for the document registration processes required by Title 24, Part 6.

JA7.7.1.1 Keyed-in Data Entry

Data Registries shall have the capability to receive data entry from an authorized user's personal computing device when the authorized user has logged-on to the Data Registry web service using the personal computing device.

JA7.7.1.2 Digital Data Sources External to a Data Registry

As an alternative to the data entry described in JA7.7.1.1, digital data sources external to a Data Registry may be used by an authorized user of a Data Registry for transmitting information to a Data Registry during document registration procedures. External Digital Data Sources (EDDS) shall be approved by the Energy Commission in accordance with the applicable requirements specified in Sections JA7.8.

JA7.7.1.2.1 EDDS Data Exchange Requirements

The data uploads to an EDDS, and the data exchange between a Data Registry and an EDDS, including data upload and data exchange that is facilitated by an API, shall conform to the following:

(a) The data exchange from an EDDS to a Data Registry shall be initiated only by an authorized user of the Data Registry; only while the user is logged into his Title 24, Part 6 Data Registry user account; and only by use of a data exchange feature managed and made available to the user by the Data Registry user interface.

(b) The data exchange from an EDDS to a Data Registry shall not be an unattended automatic electronic data exchange transaction.

(c) The Registration Provider shall ensure the authorized user has the opportunity to review and revise the information transmitted to the data registry by use of an EDDS prior to making electronic signature controls available to the user.

(d) The Registration Provider shall be responsible for managing the security and integrity of the data exchange with the EDDS.

(e) The Registration Provider shall ensure that user data uploads to the EDDS, and subsequent storage and maintenance of compliance data in the EDDS are done using best practices for secure data exchange and secure data storage.

(f) The Registration Provider shall ensure that the data exchange processes that import data into the Data Registry from the EDDS are performed using best practices for secure data exchange.

(g) The user's compliance data may be uploaded automatically to an EDDS datastore, such as by network-connected diagnostic field verification instruments, or it may be keyed in by the user using an EDDS services software user interface.

(h) The data transmitted from an EDDS to a Data Registry shall conform to the XML schema for each respective Title 24, Part 6 compliance document for which the data is to be used. All data provided to complete compliance documents shall be subjected to data validation by the Data Registry software after the data is transmitted to the Data Registry.

(i) The current compliance document schemas approved by the Energy Commission shall be made available to the EDDS services providers as needed in order to clarify the Title 24 Part 6 compliance document data requirements.

(j) Examples and additional guidance for how to comply with Joint Appendix JA7 regarding interfacing with and managing EDDS technical features are included in the Data Registry Requirements Manual.

JA7.7.1.2.2 EDDS Types

EDDS types may include but are not limited to:

(a) Diagnostic instrument manufacturer services that incorporate wireless or web-based data logging capabilities into their products, capture and store relevant information from field diagnostic testing procedures, and provide digital access to the stored data to the diagnostic tool owners and other parties to the field verification procedure.

(b) Third party quality control program~~s~~ (TPQCP) services that verify the work of participating installers, collect and evaluate more detailed data than necessary for compliance, identify in real-time during the installation invalid and inaccurate installer testing and noncompliant installations, and enable corrected testing with the goal of bringing installations into compliance before the installer leaves the job site. TPQCP descriptions and requirements are specified in Appendix RA2.7.

(c) Internet-based datastore services that are administered by an EDDS Provider ~~to~~ who ensures the security and integrity of data input to the datastore service. Authorized users of Title 24, Part 6 Data Registries may elect to use EDDS datastore services for data input, and subsequently transmit the stored data to a Title 24, Part 6 Data Registry while logged-in to the Data Registry during Title 24, Part 6 document registration procedures.

JA7.7.1.3 Image File Format Specification for Document Registration

Image files transmitted to a Data Registry that originate from an Energy Commission-managed compliance Report Generator or approved compliance software as part of document registration procedures shall be non-editable "flat" image files in PDF format. Registered Compliance Document images produced by a Data Registry shall be non-editable "flat" image files in PDF format. The PDF image of a Registered Compliance Document shall not be recreated from data when a user subsequently wishes to view a copy of the registered document or download a PDF file copy of the document. Thus, the image shall be generated only once~~,~~ and stored in the Data Registry as a "non-editable" image file.

JA7.7.1.4 Export to Commission Compliance Document Repository

Contingent upon approval of a document repository by the Commission, upon conclusion of the registration of a document, the Data Registry shall immediately and automatically export a copy of the Registered Compliance Document and Compliance Registration Package to the Energy Commission Document Repository.

The Compliance Registration Packageexport shall conform to the specifications for data exchange described in JA7.6 and JA7.7.

Compliance Registration Package exports to the Commission Compliance Document Repository shall contain the Compliance Data Exchange File that includes the XML data representation of the

information displayed on the Registered Compliance Document, and the Registration Provider's digitally signed image file that represents the completed Registered Compliance Document.

Detailed guidance for how to comply with requirements in JA7 concerning data and document exports to the document repository are included in the Data Registry Requirements Manual.

JA7.7.1.5 Electronic Copies of Registered Compliance Documents for Submittals

Registered document files retained by a Data Registry shall be made available to authorized users of the Data Registry for download for use for electronic submittals. These electronic copies of the registered compliance documents shall have the Registration Provider's digital signature which provides for automatic electronic verification of the authenticity of the document. Refer to Section JA7.5.5 for more information about automatic verification of document authenticity using digital certificates.

JA7.7.1.6 Security and Authentication for the Performance Certificate of Compliance

The Title 24, Part 6 residential and nonresidential compliance manager-based performance compliance software (compliance software) utilizes digital signing when generating analysis data for submission to the Compliance Report Generator (RG) for creating the Certificate of Compliance. Subsequently, the RG utilizes digital signing of the Certificate of Compliance Registration Package returned to the compliance software user making available the capability for Data Registries to verify the authenticity of the compliance software output and confirm the data has not been tampered with.

Data Registries shall digitally inspect all Certificate of Compliance Registration Packages submitted for registration to ensure both the Certificate of Compliance data and PDF image components of the compliance software output are authentic and have not been tampered with. Data Registries shall ensure that Certificate of Compliance Registration Packages that are not authentic or have been tampered with shall not be used for document registration for demonstrating compliance with Title 24 Part 6.

Detailed guidance for how to comply with requirements in JA7 concerning Data Registry use of the digital signing technologies employed by the compliance software and the RG are included in the Data Registry Requirements Manual.

JA7.8 Data Registry Approval

This section explains the requirements for approval of Data Registries that provide services to authorized users for creating and registering documents required for compliance with Title 24, Part 6.

The Commission shall perform acceptance testing of Data Registries when a Registration Provider submits an application for approval in order to confirm the requirements in Appendix JA7 have been met.

When an application for approval includes use of external digital data sources (EDDS) described in Section JA7.7.1, the Energy Commission shall perform acceptance testing of the EDDS proposed to be used for data input by authorized users of the Data Registry.

Detailed examples and guidance for how to comply with requirements in JA7 concerning acceptance testing and approval procedures for data registries and EDDS are included in the Data Registry Requirements Manual.

JA7.8 is not applicable to approval of compliance software used for the performance compliance method for demonstrating compliance with Part 6.

JA7.8.1 Overview

The approval procedure requires the Registration Provider applicant to perform self-testing of the required document registration capabilities.

When the application for approval includes use of an EDDS, the EDDS services provider and the Registration Provider shall perform self-testing of the data exchange features proposed for approval, and confirm that the data exchange from the EDDS to the Data Registry provides accurate information to all applicable compliance document data fields for each compliance document for which the EDDS is proposed to be used for data input.

The Commission shall subsequently perform acceptance tests to verify that the proposed Data Registry is suitable for use for providing the compliance document registration functionality required by the Standards.

Refer to the Data Registry Requirements Manual for additional guidance on alternative procedures for the Energy Commission staff to perform acceptance testing of the document registration capabilities.

The Registration Provider shall develop a user manual or online help screens that explain how to perform the document registration procedures offered by the Data Registry. The user manual or online help screens shall be reviewed by the Commission for accuracy and ease of use.

JA7.8.2 *Application Checklist*

Application for approval shall conform to all applicable requirements given in Standards Sections 10-109 and 10-110. The following is a list of the items that shall be included in an application package:

JA7.8.2.1 Registration Provider Applicant Certification Statement.

A statement from the Registration Provider applicant certifying the reliability and accuracy of the Data Registry when used for registration of Compliance Documents in accordance with the requirements of Standards Section 10-103(a), Appendix JA7. Refer to the Data Registry Requirements Manual for additional guidance.

The template for the Registration Provider Certification Statement document may be published in the Data Registry Requirements Manual, and electronic versions of the Registration Provider Certification Statement template shall be made available to the Registration Provider applicant upon request.

JA7.8.2.2 Compliance Document Registration Self-Test Results.

Electronic copies of the results from the Registration Provider's document registration self-tests shall be provided.

Refer to the Data Registry Requirements Manual for additional guidance on performing and reporting self-tests.

JA7.8.2.3 User Manual

A copy of the user manual for the Data Registry shall be provided in an electronic format that can be utilized by word processing software. Help screens from the Data Registry user interface, organized into an electronic document file with a table of contents is an acceptable alternative to the requirement for a user manual.

JA7.8.2.4 Data Registry User Account Access.

Username and password information shall be provided to allow access to the Data Registry for Energy Commission staff to perform acceptance testing of Data Registry functionality.

The Registration Provider's digital signature public key shall be made available such that the digital signature on registered documents produced by the Data Registry can be tested.

JA7.8.2.5 Application Fee and Other Administrative Requirements

Data Registry approvals shall conform to all applicable requirements and procedures specified in Standards Section 10-109 and 10-110.

JA7.8.2.6 Disclosure of Contractual Agreements with External Digital Data Sources (EDDS)

A working agreement document or contract shall be executed between a Registration Provider and an External Digital Data Source (EDDS) services provider as prerequisite to approval of the EDDS for use for transmittal of data to the Data Registry for Title 24, Part 6 document registration. The agreement shall describe the specifications of any Internet-based EDDS services or EDDS software utilized to store the compliance document data on behalf of authorized users of the Data Registry, including description of any Internet-based data gateway interfaces (such as an API) used for sharing the compliance data with third parties.

Applications for approval of a Data Registry to use EDDS services shall include documentation to disclose the details of the working agreement(s) or contract(s) between the Registration Provider and EDDS services Provider. This documentation shall include descriptions of the parties involved, and the technologies used for the data exchanges between the EDDS and the Data Registry.

A separate agreement is required for each working relationship between a Data Registry and an EDDS. EDDS services providers may be approved to provide services to any number of approved Registration Providers. Registration Providers may be approved for use of any number of EDDS services providers. Where a Registration Provider makes use of an Application Programming Interface (API), each EDDS that the API interfaces with must be approved.

JA7.8.3 *Types of Approval*

There are two Data Registry approval procedures: full approval as described in Section JA7.8.3.1, and streamlined approval of amendments and revisions as described in Section JA7.8.3.2. Approval of an EDDS services provider shall conform to the requirements of either Section JA7.8.3.1 or Section JA7.8.3.2, as applicable. Refer to the Data Registry Requirements Manual for additional guidance on approval procedures.

JA7.8.3.1 Full Approval

Full approval by the Energy Commission shall be required when an applicant Registration Provider has not previously been approved by the Energy Commission.

Full approval by the Energy Commission shall be required whenever major changes are made to a Data Registry's functionality, security, or technology features that necessitate acceptance testing of more than 30% of the compliance document templates used in the applicant's Data Registry library.

Full approval by the Energy Commission shall be required when the Standards are updated (re-approval). When Data Registry re-approval is mandated by the Energy Commission, all Registration Providers shall be notified of the re-approval timetable. Refer to the Data Registry Requirements Manual for additional guidance on the re-approval process.

Full approval shall ensure the Data Registry conforms to all applicable requirements for functionality and security in Appendix JA7 including but not limited to:

(a) Capability to produce and manage registered documents (JA7.5).

(b) Electronic signature capability, and manage authorization of users (JA7.6.3.2.1).

(c) Document data validation (JA7.6.3.2.2).

(d) Signer review and signature actions (JA7.6.3.2.3).

(e) Digital signature and digital certificate actions (JA7.6.3.2.4).

(f) Capability to transmit secured documents and data to the Commission Compliance Document Repository (JA7.6.3.2.5).

(g) Document retention capability (JA7.6.3.2.6).

(h) Capability to receive and process electronic data using best practices for secure data exchange, using data sources and procedures approved by the Energy Commission for registering compliance documents (JA7.6.3.2.7; JA7.7).

(i) Capability for data exchange with the compliance report generation services made available by the Energy Commission to generate formatted electronic documents (JA7.2, JA7.7).

JA7.8.3.2 Streamlined Approval of Amendments and Revisions

Amendments and revisions to existing Data Registry software and services for which full approval by the Energy Commission is not required, may be approved by the Executive Director through a streamlined process.

Changes that qualify for streamlined approval include minor changes to the Data Registry document registration procedures, data input specifications and procedures, or registered compliance document output.

Any application for amendment or revision to existing Data Registry software and services shall be accompanied by a cover letter explaining the type of amendment or revision requested, and copies of any applicable documents that are necessary to fully describe and justify the proposed amendment or revision.

All items on the application checklist in section JA7.8.2 that are applicable to the proposed amendment or revision shall be submitted.

When Data Registry modifications qualify for streamlined approval, the following procedure shall be followed:

(a) The Registration Provider applicant shall notify the Executive Director in writing to provide a description of the change and the reason for making the change.

(b) The Registration Provider applicant shall prepare an addendum to the user manual describing the change to the Data Registry if applicable.

(c) The Executive Director shall respond to the Registration Provider applicant in accordance with the procedures specified in Standards Section 10-110. The Executive Director response to the applicant may:

1. Approve the modification;
2. Request additional information;
3. Refuse to approve the modification;
4. Require the Registration Provider to submit results of additional acceptance tests applicable to the modification; or
5. Require that the Registration Provider make specific changes to either the User Manual addendum or the Data Registry functionality.

(d) Subject to approval by the Executive Director, the Registration Provider may make the modified Data Registry available for use for registration of compliance documentation,

along with the modified user manual or addendum to the user manual, and shall notify authorized users of the Data Registry when modifications to the Data Registry have been made available.

JA7.8.4 Rescinding Approval (Deactivation) of Data Registries

The Commission may rescind approval of Data Registries through various means as described in this section.

A revision to the functionality of a Data Registry to discontinue a working or contractual relationship between the Data Registry and an External Digital Data Source Provider:

(a) Shall not be a procedure that initiates deactivation of the Data Registry.

(b) Shall use the approval procedures specified in Sections JA7.8.3.1 or JA7.8.3.2, as applicable.

JA7.8.4.1 Procedures that Initiate Deactivation

(a) All Data Registries are deactivated when the Standards undergo substantial changes, usually occurring with each Standards update. However, the Data Registry shall remain approved to provide document registration for projects that have been permitted under the prior versions of the Standards.

(b) Any Data Registry can be deactivated by a letter from the Registration Provider requesting that the Data Registry be deactivated. The deactivation request shall briefly describe the reasons that justify the need for deactivation.

(c) The Executive Director may at any time, including upon petition by any party or recommendation by Commission staff, initiate a review of a Data Registry approval according to the steps outlined in Section JA7.8.4.2 below. The intent is to provide a means whereby serious Data Registry errors, violations of JA7, flawed numeric results, or improper registered document output not discovered in the Data Registry approval process can be verified, and a corrective course of action determined. Also, the intent is to provide ample opportunity for the Commission, the Registration Provider, and all interested parties to evaluate any alleged errors in the Data Registry functionality.

JA7.8.4.2 Challenging a Data Registry and Initiating Deactivation

A description of the process for challenging a Data Registry or initiating a deactivation procedure follows:

(a) Any party may request a review of a Data Registry approval by submitting a petition to the Energy Commission's Executive Director. petition shall:

1. State the name of the Data Registry that contains the alleged errors or violations of the Registration Provider’s obligations under JA7;

2. Identify concisely the nature of the alleged errors or violations of the Registration Provider’s obligations under JA7 in the Data Registry that require review;

3. Explain why the alleged errors are serious enough in their effect on document registration compliance to justify a deactivation procedure; and

4. Include appropriate data electronically (in a format agreed to by the *Executive Director*) and/or information sufficient to evaluate the alleged errors or violations of JA7.

(b) The Executive Director shall make a copy or copies of the petition or Commission Staff's recommendation report available to the Registration Provider and interested parties within 30 days. Comments from interested parties shall be received within 60 days of the acceptance of the original application.

(c) Within 75 days of receipt of the petition or recommendation report, the Executive Director may request any additional information needed to evaluate the alleged Data Registry errors or violations of the Registration Provider's obligations under JA7 from the party who initiated the deactivation review process. If the additional information is incomplete, this procedure will be delayed until the initiating party submits complete information.

(d) Within 75 days of receipt of the petition or recommendation report, the Executive Director may convene a workshop to gather additional information from the initiating party, the Registration Provider and interested parties. All parties will have 15 days after the workshop to submit additional information regarding the alleged Data Registry errors or alleged violations of the Registration Provider's obligations under JA7.

(e) Within 90 days after the Executive Director receives the petition or recommendation report or within 30 days after receipt of complete additional information requested of the initiating party, whichever is later, the Executive Director shall either:

1. Determine that the Data Registry need not be deactivated; or

2. Submit to the Energy Commission a written recommendation that the Data Registry be deactivated.

(f) If the Energy Commission approves the Data Registry deactivation, it shall take effect 60 days later. During the first 30 days of the 60 day period, the Executive Director shall send out a Notice to Enforcement Agencies and Interested Parties announcing the deactivation.

JA7.8.4.3 Burden of Proof

All initiating parties have the burden of proof to establish that the review of alleged Data Registry errors should be granted. The deactivation process may be terminated at any time by mutual written consent of the initiating party and the Executive Director.

The Registration Provider may use the 180 to 210-day period outlined here to update the Data Registry, get it re-approved by the Commission, and make available for use by authorized users the revised version of the Data Registry that does not contain the errors or violations initially brought to the attention of the Commission.

JA7.8.5 Data Registry User Manual

Each Registration Provider is required to publish a Data Registry User Manual. This requirement may be met by incorporating help screens into the Data Registry user interface, or making electronic tutorials readily available to users. A printed or electronic version which includes all help screen items or tutorials must be submitted with the application. The Data Registry User Manual shall provide guidance for building permit applicants and enforcement agency officials to enable correct use of the Data Registry, and assists with preparation of registered documentation used for submittals to enforcement agencies and other parties to the construction project.

The Document Registration Manual shall describe the specific Data Registry procedures for completing registered compliance documents. The manual shall provide instructions for preparing the data input and for utilizing the registered documents for submittals. An example of a full set of compliance documents for a building project shall be included.

Data Registry User Manuals shall be written in a clear and concise manner and with an organization and format that will allow users to quickly locate the topic and understand the instructions. Also, Registration Providers shall make electronic copies of their user manual available from their Data Registry website to all building departments in California.

Portions of a Data Registry User Manual that are incorporated as help screens into the Data Registry user interface do need not be published separately; their inclusion into the user interface satisfies the requirements of this subsection.

The following sections describe the information that shall be included in all Data Registry User Manuals. It also presents the required organization for that information.

JA7.8.5.1 Data Registry Capabilities

This section shall discuss the Data Registry capabilities, providing explanation of how to access these capabilities, and the purpose for each of these features.

JA7.8.5.2 Preparing Basic Documents

This section shall cover the basic use of the Data Registries to prepare each of the basic Compliance Document types, and should include a complete summary of all document creation methods or commands necessary to complete the required registered documents.

JA7.8.5.3 Instruction for Submittal of the Registered Document(s)

This section shall contain instruction for completing submittals of completed registered documents to enforcement agencies or other persons who require copies of completed registered documents. Instruction shall be given for all methods of submittal the Data Registry supports, including various methods for submittal of electronic copies of the registered documents, as well as for printing of paper copies.

JA7.8.5.4 Sample Compliance Documentation

This section shall include an example of a complete set of compliance documentation for a sample building. The building need not be overly complex, nor need it include every document

type possible. The example should, however, include example documentation for all compliance document types that would normally be submitted for typical occupancy types administered by the Data Registry.

JA7.8.5.5 Instruction for Use of EDDS for Data Input for Document Registration

When a Data Registry is approved to make available use of EDDS features to authorized users of the Data Registry for data input during document registration procedures, the Data Registry user manual shall include instructions for use of those features. The instructions shall describe use of the Data Registry user interface for EDDS data input procedures. Additionally, if the EDDS services provider has a user interface or software application that the user is expected to access and operate that is independent of the Data Registry user interface, a copy of the EDDS service or software user instructions shall be included in the Data Registry User Manual. If the EDDS service or software user instructions contain proprietary information or intellectual property, the EDDS service or software user instructions do not need to be included in the Data Registry User Manual. However, the EDDS service or software user instructions must be made available to all authorized users that use the EDDS service or software.

(This page intentionally left blank.)

Joint Appendix JA8

Appendix JA8 – Qualification Requirements for High Luminous Efficacy Light Sources

JA8.1 Purpose and Scope

Joint Appendix JA8 provides the qualification requirements for high luminous efficacy light sources installed to comply with Section 150.0(k). For the purposes of this Section, high luminous efficacy light sources include ballasts or LED drivers if needed for operation of the light source: light sources shall be certified together with a driver or ballast. If the light source is inseparable from the luminaire the entire luminaire shall meet the requirements of this section. All qualifying light sources shall be certified to the Energy Commission according to all of the requirements in this Appendix.

JA8.2 Certification of Test Labs

The light source under test shall be tested at a testing laboratory accredited to ISO/IEC 17025:2017, by the National Voluntary Laboratory Accreditation Program (NVLAP) or other laboratory accreditation body operating in accordance with ISO/IEC 17011 and produced under an ongoing inspection program carried out by a Type A inspection body in accordance with ISO/IEC 17020.

JA8.3 Tests to be performed

Compliance with the requirements of this Appendix shall be determined by performance of the following test procedures, as applicable to the type of light source.

Sample group size shall be as specified in the referenced test procedures. Where a sample group is not specified for a test, a single unit shall be tested.

JA8.3.1 Luminous Efficacy Test

For federally regulated light sources, luminous efficacy shall be determined by the test procedures specified in 10 CFR 429 Subpart B and 10 CFR 430.23(gg).

For non-federally-regulated light sources, luminous efficacy at full light output shall be determined by the following test procedures, as applicable to the type of light source:

a) For incandescent and incandescent reflector lamps: 10CFR 430.23(r).
b) For medium base compact fluorescent lamps: 10CFR 430.23(w).
c) For general service fluorescent lamps: 10CFR 430.23(r).
d) For fluorescent lamps that are not Medium base compact fluorescent lamps and general service fluorescent lamps: IES LM-9.
e) For LED light sources, IES LM-79.

f) For high intensity discharge lamps, IES LM-51.
g) For induction lamps, IES LM-66.

The reported value shall be the minimum luminous efficacy of the tested units and be rounded to the nearest tenth.

JA8.3.2 Power Factor Test

Power factor shall be measured at full light output in accordance with ANSI C82.77, Section 6 and 7.

For lamps, the reported value shall be the average measured values of the tested units rounded to be the nearest tenth.

For all other sources, the reported value shall be the minimum power factor of the tested units rounded to the nearest tenth.

JA8.3.3 Start Time Test

Start time shall be measured in accordance with the ENERGY STAR Program Requirements Product Specifications for Lamps 2.1: Start Time Test Method, notwithstanding the scope of the test, subject to the following modifications:

For lamps the reported value shall be the average start time of the tested units rounded to the nearest millisecond.

For all other light sources the reported value shall be the maximum start time of the tested units rounded to the nearest millisecond.

For light sources that provide a fade-in feature, the initial plateau shall be the point specified in the U.S. Environmental Protection Agency ENERGY STAR Program Requirements for Lamps and Luminaires Start Time Test Method dated October 2017.

For light sources with a standby mode consuming no more than 0.2 watts of power, the start time test may be performed with the product receiving power and in this mode. In this case, the start time shall be the time between the sending of an on signal to the device via an appropriate control and the initial plateau.

JA8.3.4 Color Characteristics Tests

Correlated Color Temperature (CCT) and Color Rendering Index of federally-regulated light sources shall be determined by the test procedures specified in 10 CFR 429 Subpart B and 10 CFR 430.23(gg).

Correlated Color Temperature (CCT) and Color Rendering Index of non-federally-regulated light sources shall be determined by the following test procedures, as applicable to the type of light source:

a) Incandescent and halogen reflector lamps: IES LM-20.

b) Incandescent non-reflector lamps: IES LM-45.

c) Single ended compact fluorescent lamps: IES LM-66.

d) Fluorescent lamps that are not single ended compact fluorescent lamps: IES LM-9.

e) Induction lamps: IES LM-66.

f) LED light sources: IES LM 79.

g) High intensity discharge lamps: IES LM-51.

h) Other equipment: other applicable test procedure approved by the Executive Director

Nominal Correlated Color Temperature (CCT) shall be calculated in accordance with CIE 15 (reference document ANSI C78.377). Color Rendering Index (CRI) shall be calculated in accordance with CIE 13.3.

The reported value shall be the average measured values of units tested rounded to be the nearest whole number for CRI.

JA8.3.5 RESERVED

JA8.3.6 RESERVED

JA8.3.7 Tests for Minimum Dimming Level, Flicker, and Audible Noise

Light sources shall be tested for flicker using Joint Appendix 10.

The audible noise test shall be performed as specified in the ENERGY STAR Program Requirements Product Specification for Lamps Version 2.1: Test Method – Noise, notwithstanding scope.

Minimum dimming level is measured by comparing the stabilized light output of the light source with the dimming control set to full light output with the dimming control being set to the manufacturer's minimum rated output. Full light output and minimum light output is measured after the light output has stabilized according to the test procedures specific to light source type in Section JA 8.3.1.

In addition to the reporting of flicker results as described in Section JA8.6, flicker test data for each combination of light source, ballast or driver (if applicable), transformer type and dimmer type claiming compliance with JA8 shall be submitted to the California Energy Commission.

Testing for minimum dimming level, flicker, and audible noise is required for each combination of light source, ballast or driver (if applicable), transformer type and dimmer type as follows:

1. Low voltage light sources shall be tested with a representative transformer for each transformer type that the light source is claiming compatibility.
2. Light sources claimed as compatible with forward phase-cut dimmers shall be tested in combination with a NEMA SSL 7A compliant dimmer.
3. Light sources claimed as compatible with dimmers other than forward phase-cut dimmers, dimmability, low noise and low flicker operation shall be tested for each ballast or driver combination (if applicable) with at least one representative dimmer for each dimmer type for which compatibility is claimed.

JA8.4 Qualification Requirements

The following qualification requirements must be met for the light source to be considered High Luminous Efficacy as specified in Section 150(k) and Table 150.0-A.

JA8.4.1 Luminous Efficacy

The light source shall meet the following requirements when measured in accordance with the test method of Section JA8.3.1:

The luminous efficacy of the light source shall be equal to or greater than either the applicable State or federal appliance efficiency standard or 45 lumens/Watt, whichever is higher, when tested at its full light output.

JA8.4.2 Power Factor

The light source shall meet the following requirements when measured in accordance with the test method of Section JA8.3.2:

The light source shall have a power factor equal to or greater than 0.90 when tested at its full light output.

JA8.4.3 Start Time

The light source shall meet the following requirements when measured in accordance with the test method of Section JA8.3.3:

The light source shall have a start time no greater than 0.5 seconds.

JA8.4.4 Color Characteristics

The light source shall meet the following CCT and color rendering requirements when measured in accordance with the test method of Section JA8.3.4:

(a) LED lamps regulated by the Title 20 Appliance Efficiency Regulations and subject to Color Rendering Index requirements under Title 20 shall comply with the Color Rendering Index requirements in Title 20.

(b) All other light sources shall provide a Color Rendering Index (CRI) of 90 or higher and color rendering R9 value of 50 or higher.

(c) All light sources shall be capable of providing a nominal Correlated Color Temperature (CCT) of 4000 Kelvin or less.

JA8.4.5 RESERVED

JA8.4.6 Dimming, Reduced Flicker Operation and Audible Noise

The light source shall meet the following dimming, reduced flicker operation, and audible noise requirements when measured in accordance with the test method of Section JA8.3.7:

(a) The light source shall be dimmable down to 10 percent light output where 100 percent full light output is defined as operating the light source at the maximum setting provided by the control.

(b) LED-based light sources designed to be connected with or dimmed by forward phase cut dimmers shall meet the requirements of NEMA standard SSL 7A.

(c) Light source in combination with specified control shall provide "reduced flicker operation" when tested at full light output as specified in JA10, where reduced flicker operation is defined as having percent amplitude modulation (percent flicker) less than 30 percent at frequencies less than 200Hz.

(d) Light source shall not emit audible noise above 24dBA measured at 1 meter from the light source when tested at full light output.

(e) Light sources shall also be tested and shown to comply with (c) and (d) while at 20% light output.

JA8.5 Marking

Light sources meeting the requirements of this Appendix shall be marked with "JA8-2022" to indicate their compliance with the criteria of this Appendix. Light sources that have passed the Elevated Temperature Life Test specified in the ENERGY STAR Product Specification for Lamps Version 2.1, or that have passed the rated life test specified in the ENERGY STAR Product Specification for Luminaires Version 2.1, shall instead be marked with "JA8-2022-E" to indicate that they comply with this Appendix and may additionally be installed in elevated temperature applications such as enclosed fixtures. Light sources that do not comply with this Appendix shall not be marked with "JA8-2022" or "JA8-2022-E".

JA8.6 Data Reporting

The following test data shall be submitted to the California Energy Commission in the format specified in Table JA-8. The entity submitting the filing shall keep all test data and documentation required for compliance for at least two years from the date of certification and shall provide copies of this documentation to the Energy Commission within 10 days of written request received from the Energy Commission.

TABLE JA-8. DATA TO BE RECORDED AND SUBMITTED TO THE CALIFORNIA ENERGY COMMISSION

Required Information	Permissible Answers	Compliance Threshold
Manufacturer, Model number, Description		
Light Source Type	LED, OLED, Fluorescent, HID, Incandescent, Other	
Product type	Omnidirectional lamp, Directional lamp, Decorative lamp, LED light engine, inseparable	

	SSL luminaire, T20 lamp, other	
Lab accredited by NVLAP or accreditation body operating in accordance with ISO/IEC 17011?	Yes/No	Yes
Initial Luminous Efficacy	Value (lumens/Watt)	≥ 45 lumens/Watt
Power Factor at Full Rated Power	0 – 1 Fraction	≥ 0.90
Start time	Value (seconds)	≤ 0.5 sec
Correlated Color Temperature (CCT)	Number Kelvin	≤4000 Kelvin.
Color Rendering Index (CRI)	0-100	≥ 90 for all products other than T20 lamps, ≥ 82 for T20 lamps
Color Rendering R9 (red)	0-100 or below 0	≥ 50 for all products other than T20 lamps
Ambient or elevated temperature	Ambient or Elevated	
Minimum dimming level	Value (percent)	≤ 10%
Dimming control compatibility	Forward Phase cut control, reverse phase cut, powerline carrier, digital, 0-10 VDC, other.	At least one type must be listed
NEMA SSL 7A compatible?	Yes/No, NA	If compatible with forward phase cut dimmer control, “Yes”. If not, “NA”.
Flicker:	**Flicker:**	**Flicker:**
See JA10 Table 10-1 for flicker data requirements and permissible answers		<30% for frequencies of 200 Hz or below, at 100% light output
See JA10 Table 10-1 for flicker data requirements and permissible answers		<30% for frequencies of 200 Hz or below, at 20% light output
Audible Noise:	**Audible Noise:**	**Audible Noise:**
100% light output: Audible Noise	Value (dBA)	≤ 24 dBA
20% light output: Audible Noise	Value (dBA)	≤ 24 dBA
Marking:	**Marking:**	**Marking:**
Marked in accordance with JA8.5	Yes/No	Yes

(This page intentionally left blank.)

Joint Appendix JA9

Appendix JA9 – Qualification Requirements for Low Leakage Air-Handling Units

Contents

Appendix JA9 – Qualification Requirements for Low Leakage Air-Handling Units 1

JA9.1 Purpose and Scope 1

JA9.2 Qualification Requirements 2

JA9.2.1 Method of Test 2

JA9.2.2 Testing Laboratory Requirements 2

JA9.2.3 Nominal Air-Handling Unit Airflow 2

JA9.2.4 Leakage Criterion for Qualification 2

JA9.1 Purpose and Scope

Joint Appendix JA9 provides the qualification requirements for air-handling units to meet the requirements for low leakage air-handling unit compliance credit(s) available in the performance standards set forth in Title 24, Part 6, Sections 150.1(b) and 140.1. Joint Appendix JA9 is applicable to air-handling units intended for installation in ducted forced-air space conditioning systems. Joint Appendix JA9 is applicable to air-handling units that are rated by the manufacturer to move less than 3,000 cfm (1400 L/s) of air.

Air-handling unit equipment types include:

(a) furnaces

(b) heat pumps

(c) air conditioners

Joint Appendix JA9 does not apply to coil boxes, filter boxes, or other duct system components that are not an integral part of the air-handling unit cabinet or enclosure certified by the manufacturer.

Joint Appendix JA9 does not apply to ducts, plenums, or other field-constructed components.

JA9.2 Qualification Requirements

To qualify as a low leakage air-handling unit for use for compliance with applicable performance compliance credits, the air-handling unit shall be certified to the Energy Commission according to the following requirements:

JA9.2.1 Method of Test

The air-handling unit shall be tested in accordance with the requirements given in ASHRAE Standard 193.

JA9.2.2 Testing Laboratory Requirements

The Air-Handling Unit shall be tested in a laboratory that has demonstrated compliance with ISO Standard 17025, General Criteria for the Competence of Testing and Calibration Laboratories, and is accredited for the ASHRAE Standard 193 test methods. The accreditation body shall be a signatory to the International Laboratory Accreditation Cooperation Mutual Recognition Arrangement (ILAC MRA) www.ilac.org.

JA9.2.3 Nominal Air-Handling Unit Airflow

The nominal air-handling unit airflow used for determining the leakage criterion for qualification shall be as follows:

(a) For heating-only systems the nominal air-handling unit airflow shall be 21.7 cfm per kBtu/hr of rated heating output capacity.

(b) For systems that provide space cooling, the nominal air-handling unit airflow shall be 400 cfm per nominal ton of cooling capacity as specified by the manufacturer, or the heating-only value, whichever is greater.

JA9.2.4 Leakage Criterion for Qualification

Allowable leakage for qualification as a Low Leakage Air-Handling Unit shall be equal to or less than 1.4 percent of the nominal air-handling unit airflow determined by Section JA9.2.3.

Joint Appendix JA10

Appendix JA10 – Test Method for Measuring Flicker of Lighting Systems and Reporting Requirements

JA10.1 Introduction

This test method quantifies flicker from lighting systems which may include all of the following components: lamps, light sources, transformers, ballasts or drivers, and dimming controls. This test method measures the fluctuation of light from lighting systems and processes this signal to quantify flicker as a percent amplitude modulation (percent flicker) below a given cut-off frequency. Signal processing is used to remove high frequency components above the cut off-frequency.

JA10.2 Equipment Combinations

The test results measured using this method are specific to each combination of:

- Light source and a representative dimmer; or
- Low voltage lamp together with a representative transformer and a representative dimmer (if applicable); or
- Light source and a representative dimming control (if applicable); or
- Light source together with a representative driver, and a representative dimming control (if applicable); or
- Light source together with a representative ballast, and a representative dimming control (if applicable).

If the control or transformer requires a greater load than what is provided by a single sample of the unit under test, additional load will be created by adding quantities of the identical light source, and ballast or driver if applicable on the same circuit receiving the control signal.

Flicker measurements of a phase cut dimmer controlling an incandescent line voltage lamp shall be considered representative for that dimmer with any line voltage incandescent lamp.

Flicker measurements of a phase cut dimmer controlling a transformer for low voltage incandescent lamps shall be representative only for that combination of dimmer and transformer with any incandescent lamp.

Flicker measurements of all non-incandescent lamp sources controlled by a phase cut dimmer represents only the specific combination of phase cut dimmer, ballast or driver, and lamp. These results cannot be applied to other combinations of dimmer, ballast, driver or lamp.

Flicker measurements of light sources controlled by 0-10 volt control, digital control, wireless control or powerline carrier control, the flicker measurement is specific to that combination of control type and ballast or driver and lamp. Test results of the lamp and ballast or driver combination can be applied to other systems that have another control of the same type (0-10 volt, digital, etc.) providing the control signal.

JA10.3 Test Equipment Requirements

Test Enclosure: The test enclosure does not admit stray light to ensure the light measured comes only from the UUT (unit under test). Provision shall be made so the test enclosure is able to maintain a constant temperature of 25°C ±5°C.

Device for data collection: Light output waveform shall be measured with a photodetector with a rise time of 10 microseconds or less, transimpedance amplifier and oscilloscope. An alternate measurement system providing the same accuracy and function as the specified equipment may be used.

Temporal response, amplification and filtering characteristics of the system shall be designed to capture the photometric data at intervals of 50 microseconds or less, corresponding to a data recording rate of no less than 20 kHz, and shall be capable of capturing at least 1 second of data.

JA10.4 Flicker Test Conditions

Product wiring setup: Fluorescent ballasts shall be wired in accordance to the guidelines provided in the DOE ballast luminous efficiency test procedure in 10 CFR 430.23(q).

Product pre-conditioning: All fluorescent lamps shall be seasoned (operated at full light output) at least 100 hours before initiation of the test. Seasoning of other lamps types is not required.

Input power: Input power to UUT (unit under test), shall be provided at the rated primary voltage and frequency within 0.5 percent for both voltage and frequency. When ballasts are labeled for a range of primary voltages, the ballasts should be operated at the primary application voltage. The voltage shall have a sinusoidal wave shape and have a voltage total harmonic distortion (THD) of no greater than 3 percent.

Temperature: Temperature shall be maintained at a constant temperature of 25°C ±5°C.

Dimming levels: Measurements shall be taken within 2 percent of the following increments of full light output: 100 percent, 20 percent, and minimum dimming level where 100 percent full light output is defined as operating the light source at the maximum setting provided by the control. When the minimum light output of the systems is greater than 20 percent of full light output, then the flicker measurements are taken at the minimum light output. For dimming fluorescent ballasts, lamp arc power may be used as a proxy for light output for the purpose of setting dimming levels for collecting test measurements.

JA10.5 Test Procedure

Lamp stabilization: Lamp stabilization shall be determined in accordance with:

IES-LM-9 for circleline, and U-tube fluorescent systems;

Code of Federal Regulations - 10 CFR 430.23(q) for linear fluorescent systems;

IES-LM-66 for compact fluorescent systems and induction lighting systems;

IES-LM-79 for light emitting diode systems; and

IES-LM-46 for high intensity discharge systems.

Lamp light output shall be stabilized in advance of taking measurements at each dimming level. Light output shall be considered stabilized when consecutive measurements taken at one minute intervals deviate by no more than 0.5%.

Recording interval: Measured data shall be recorded to a digital file with an interval between each measurement no greater than 0.00005 sec (50 microseconds) corresponding to an equipment measurement rate of no less than 20kHz, and capture at least 1 second of data.

For each dimming level after the lamps have stabilized, record lighting measurements (in footcandles or volts) from test equipment with readings taken at intervals of no greater than 50 microseconds. These readings shall be recorded for a test period of no less than one second.

JA10.6 Calculations

Perform the following data manipulation and calculation tasks for each dimming level (100 percent, 20 percent and minimum dimming level claimed by the manufacturer):

Calculate percent amplitude modulation (percent flicker) of unfiltered data over the duration of the test for a given dimming level using the following equation:

Percent Amplitude Modulation =	**(Max – Min)** **Max + Min)**	**x 100**

Where:

Max is the maximum recorded light level or voltage from the test apparatus during the duration of the test for a given dimming level.

Min is the minimum recorded light level or voltage from the test apparatus during the duration of the test for a given dimming level.

Conduct a Fourier analysis to transform data for each dimming level into the frequency domain.

Filter frequency data to evaluate the data under four additional different conditions: frequencies under 40 Hz (data above 40 Hz is set to 0), and frequencies under 90 Hz, 200 Hz, 400 Hz, and 1,000 Hz.

Perform inverse Fourier transform to place data back in time domain.

Calculate percent amplitude modulation on resulting time domain data for each filtered dataset over the full sampling duration.

JA10.7 Test Report and Data Format

For all systems where reporting of flicker is required, the test data shall be submitted to the California Energy Commission in the format specified in Table JA-10. For two years from the date of certification, the entity submitting the test report shall keep all documentation required for compliance, stored and shall provide copies of this documentation to the Energy Commission within 10 days of written request received from the Commission. This documentation shall also include for each measured system, a digital file containing the raw photometric data as described in Section JA10.5.

TABLE JA-10 FLICKER DATA TO BE RECORDED AND SUBMITTED TO THE CALIFORNIA ENERGY COMMISSION

Data	**Units/Format**
Test Date	
Test Operator	Company Name, Contact Name, Address, Phone Number, e-mail address
Entity submitting results	Company Name, Contact Name, Address, Phone Number, e-mail address
	Manufacturer or Brand
Tested lighting system component: Dimmer	Dimmer type, Manufacturer or Brand, model number
Tested lighting system component: light source (lamp or light engine)	Light source type (lamp, light engine, etc), Manufacturer or Brand, model number
Tested lighting system component: Ballast or Driver	Ballast or Driver, Manufacturer or Brand, model number
Recording interval	seconds (no greater than 0.00005 seconds)
Equipment Measurement Period	seconds (no less than 1 second)
Fraction of rated light output integrated over measurement period at 100%, 20% and minimum fraction of light output.	Fraction of rated light output integrated over measurement period at 100%, 20% and minimum fraction of light output.
Amplitude modulation unfiltered	calculated percent amplitude modulation unfiltered for each dimming level (100%, 20% and minimum fraction of light output)
Percent amplitude modulation with 1,000 Hz cut-off	calculated percent amplitude modulation, data filtered with a 1,000 Hz cut-off frequency for each dimming level: (100%, 20%, and minimum fraction of light output)

Percent amplitude modulation with 400 Hz cut-off	calculated percent amplitude modulation, data filtered with a 400 Hz cut-off frequency for each dimming level: (100%, 20%, and minimum fraction of light output)
Percent amplitude modulation with 200 Hz cut-off	calculated percent amplitude modulation, data filtered with a 200 Hz cut-off frequency for each dimming level: (100%, 20% and minimum fraction of light output)
Percent amplitude modulation with 90 Hz cut-off	calculated percent amplitude modulation, data filtered with a 90 Hz cut-off frequency for each dimming level: (100%, 20% and minimum fraction of light output)
Percent amplitude modulation with 40 Hz cut-off	calculated percent amplitude modulation, data filtered with a 40 Hz cut-off frequency for each dimming level: (100%, 20% and minimum fraction of light output)

(This page intentionally left blank.)

Joint Appendix JA11

Appendix JA11 – Qualification Requirements for Photovoltaic System

JA11.1 Purpose and Scope

Joint Appendix JA11 provides the qualification requirements for photovoltaic (PV) system to meet the prescriptive or performance standards set forth in Title 24, Part 6, Sections 140.1, 140.10, 150.1(b),150.1(c), 170.1, 170.2(f), and 170.2(g).

JA11.2 System Orientation

JA11.2.1 Prescriptive Compliance

PV systems or strings with module pitches greater than 2:12 or 10 degrees shall be installed with azimuth range between 90 to 300 degrees measured clockwise from true north. PV systems or strings with module pitches smaller than 2:12 or 10 degrees can be installed with any azimuth range.

JA11.2.2 Performance Compliance

When the California Flexible Installation (CFI) 1 is selected in the performance calculation, the PV array shall be installed with an azimuth range between 150 to 270 degrees from true north, and with all modules at the same tilt as the roof for pitches up to 7:12.

When the CFI2 is selected in the performance calculation, the PV array shall be installed with an azimuth range between 105 to 300 degrees from true north, and with all modules at the same tilt as the roof for pitches up to 7:12.

If the PV array does not meet either CFI1 or CFI2, then the actual orientation of the PV array shall be described.

JA11.3 Shading

Shading on the PV array from obstructions shall be eliminated or avoided as necessary to meet performance requirements under the performance approach or the prescriptive limit on shading under the prescriptive approach (stated in JA11.3.1). Any obstruction located north of all points on the array need not be considered as shading obstructions. Obstructions to consider include:

(a) Any vent, chimney, architectural feature, mechanical equipment, or other obstruction that is on the roof or any other part of the building.

(b) Any part of the neighboring terrain.

(c) Any tree that is mature at the time of installation of the PV system.

(d) Any tree that is planted on the building lot or neighboring lots or planned to be planted as part of landscaping for the building. (The expected shading shall be based on the mature height of the tree.)

(e) Any existing neighboring building or structure.

(f) Any planned neighboring building or structure that is known to the applicant or building owner.

(g) Any telephone or other utility pole that is closer than 30 feet from the nearest point of the array.

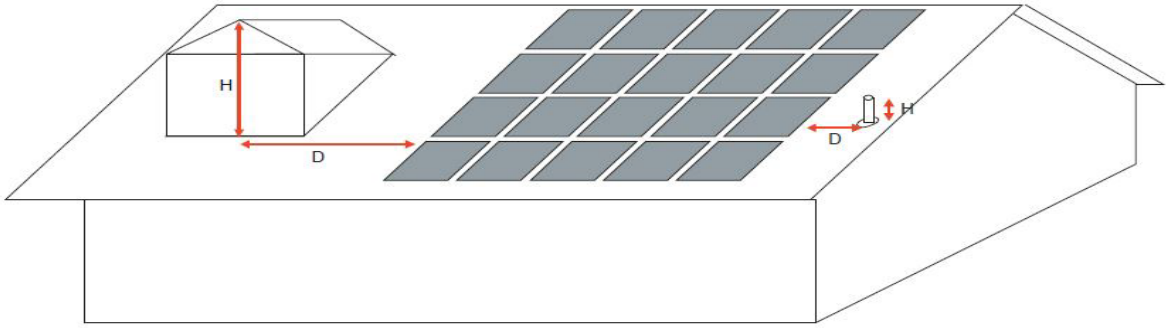

JA11.3.1 Prescriptive Minimum Shading Requirement

If the PV system does not qualify for exception 1 of section 150.14, then the weighted average annual solar access by panel count shall be equal or greater than 98 percent.

JA11.4 Solar Access Verification

A certified solar assessment tool shall be used to demonstrate~~s~~ the shading condition of the actual installation of the PV module is consistent with compliance with JA11.3.1, the shading condition modeled in the performance method as indicated on the CF1R-PRF-01, and qualification to exceptions in 150.1(c)14.

JA11.4.1 Solar Assessment Tool Certification Requirement

Solar assessment tools shall be certified to the Executive Director according to the following requirements:

a) The solar assessment tool shall calculate the annual solar access percentage of each individual solar array and a weighted average of the PV system as a whole. The calculation shall include all known obstructions, including any tree that is planted on the building lot or neighboring lots or planned to be planted as part of landscaping for the building.

b) The solar assessment tool shall not include horizon shading in the calculation by default.

c) The solar assessment tool shall produce a shade report with a summary of the PV system, including the address of the project, individual array panel count, orientation, annual solar access percentage, and a weighted average of the PV system as a whole.

d) If the solar assessment tool model shading condition based on satellite or aerial images, the annual solar access percentage values shall be comparable to on-site measurements. Documentation shall be provided to CEC as proof.

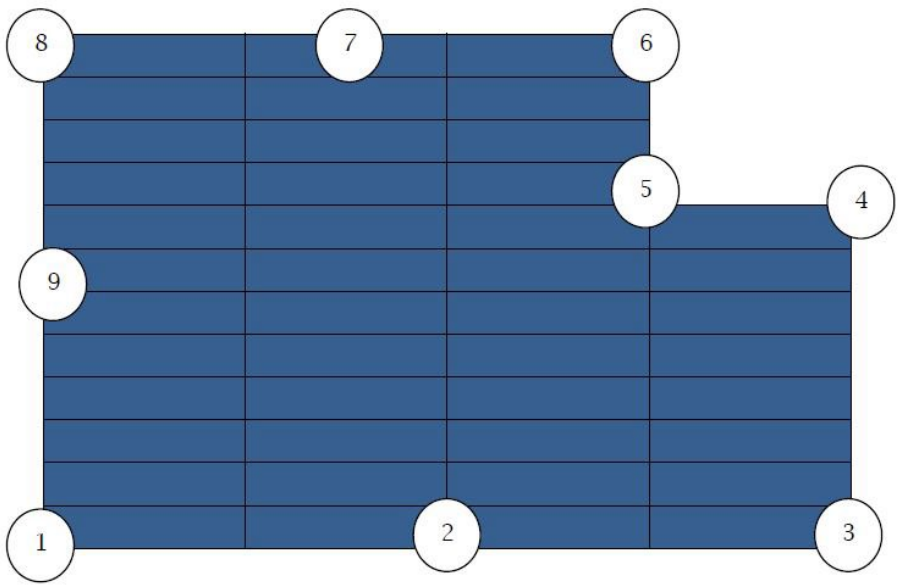

JA11.5 System Monitoring Requirements

JA11.5.1 Remote Monitoring Capability

The PV system shall have a web-based portal and a mobile device application that at a minimum provide the building owner, manager, or dwelling occupants access to the following information:

(a) The nominal kW rating of the PV system.

(b) Number of PV modules and the nominal watt rating of each module.

(c) Hourly (or 15-minute interval), daily, monthly, and annual kWh production in numeric and graphic formats.

(d) Running total of daily kWh production.

(e) Daily kW peak power production.

(f) Current kW production of the entire PV system.

JA11.6 Interconnection Requirements

The installed inverters shall be tested in accordance with the applicable requirements in UL1741 and UL1741 Supplement A. The PV system and the associated components, including inverters, shall comply with all applicable requirements specified in Rule 21 as adopted by the California Public Utilities Commission (CPUC).

JA11.7 Certificates and Availability

The PV installer shall certify on the CF2R-PVB-01-E, Certificate of Installation for Photovoltaic System that all provisions of JA11 are met and provide a solar assessment report meeting one of the following conditions:

a) The satellite, drone or other digital image used in the solar assessment report must be created and dated after the installation of the photovoltaic system.

b) If the satellite, drone or other digital image used in the solar assessment report is dated before the installation of the photovoltaic system, additional on-site pictures must be attached to clearly show that the installed system matches the system modeled in the solar assessment report.

The Certificate of Installation shall be available on the building site for inspections.

JA11.8 Enforcement Agency

The local enforcement agency shall verify that the CF2R-PVB-01-E Certificate of Installation is complete and correct, and uploaded into a Commission-approved registry.

Appendix JA12 – Qualification Requirements for Battery Storage System

JA12.1 Purpose and Scope

Joint Appendix JA12 provides the qualification requirements for battery storage system to meet the requirements for battery storage compliance credit(s) available in the standards set forth in Title 24, Part 6, Sections 150.1(b) and 140.10 in combination with an on-site or community solar photovoltaic system, or a separate battery storage system. The primary function of the battery storage system is daily cycling for the purpose of load shifting, maximized solar self-utilization, and grid-harmonization.

JA12.2 Qualification Requirements

To qualify as a battery storage system for use for compliance with applicable performance compliance credits, the battery storage system shall be certified to the Energy Commission to meet the following requirements:

JA12.2.1 Safety Requirements

The battery storage system shall be tested in accordance with the applicable requirements given in UL1973 and UL9540. Inverters used with battery storage systems shall be tested in accordance with the applicable requirements in UL1741 and UL1741 Supplement A.

JA12.2.2 Minimum System Performance Requirements

JA12.2.2.1 Prescriptive Compliance

The installed battery storage system shall meet or exceed the following ~~performance~~ specifications:

(a) Usable capacity of at least 5 kWh.

(b) Single Charge-discharge cycle AC to AC (round-trip) efficiency of at least 80 percent.

(c) Energy capacity retention of 70 percent of nameplate capacity after 4,000 cycles covered by a warranty, or 70 percent of nameplate capacity under a 10-year warranty.

JA12.2.2.2 Performance Compliance

The installed battery storage system shall meet or exceed the following specifications:

(a) Usable capacity of at least 5 kWh.

(b) Energy capacity retention of 70 percent of nameplate capacity after 4,000 cycles covered by a warranty, or 70 percent of nameplate capacity under a 10-year warranty.

JA12.2.3 Control Requirements for Prescriptive and Performance Compliance Paths

The requirements below are applicable to all control strategies.

(a) The battery storage system shall have the capability of being remotely programmed to change the charge and discharge periods.

(b) During discharge, the battery storage system shall be programmed to first meet the electrical load of the dwelling unit(s). If during the discharge period the electrical load of the dwelling unit(s) is less than the maximum discharge rate, the battery storage system shall have the capability to discharge electricity into the grid upon receipt of a demand flexibility signal from the local utility or a third-party aggregator.

(c) The battery storage system shall operate in one of the control strategies listed in JA12.2.3.1, JA12.2.3.2, JA12.2.3.3, and JA12.2.3.4 except during a power interruption, when it may switch to backup mode. If the battery system switches to backup power mode during a power interruption, upon restoration of power the battery system shall immediately revert to the previously programmed JA12 control strategy.

(d) The battery storage system shall perform a system check on the following dates, to ensure the battery is operating in one of the control strategies listed in JA12.2.3.1, JA12.2.3.2, JA12.2.3.3, and JA12.2.3.4:

1) Within 10 calendar days before the onset of summer TOU schedule, and

2) Within 10 calendar days before the onset of winter TOU schedule.

At the time of inspection, the battery storage system shall be installed to meet one of the following control strategies. The battery storage system also shall have the capability to remotely switch to the other control strategies.

JA12.2.3.1 Basic Control

When combined with an on-site solar photovoltaic system, to qualify for the Basic Control, the battery storage system shall be installed in the default operation mode to allow charging only from an on-site photovoltaic system when the photovoltaic system production is greater than the on-site electrical load. The battery storage system shall discharge only when the photovoltaic system production is less than the on-site electrical load.

JA12.2.3.2 Time-of-Use (TOU) Control

When combined with an on-site solar photovoltaic system, to qualify for the TOU Control, the battery storage system shall be installed in the default operation mode to allow charging only

from an on-site photovoltaic system. The battery storage system shall begin discharging during the highest priced TOU hours of the day. The operation schedule shall be preprogrammed from factory, updated remotely, or programmed during the installation/commissioning of the system. At a minimum, the system shall be capable of programming three separate seasonal TOU schedules, such as spring, summer, and winter.

JA12.2.3.3 Advanced Demand Flexibility Control

When combined with an on-site solar photovoltaic system, to qualify for the Advanced Demand Flexibility Control, the battery storage system shall be programmed by default as Basic Control as described in JA12.2.3.1 or TOU control as described in JA12.2.3.2. The battery storage control shall meet the demand flexibility control requirements specified in Section 110.12(a). Additionally, the battery storage system shall have the capability to change the charging and discharging periods in response to signals from the local utility or a third-party aggregator.

JA12.2.3.4 Controls for Separate Battery Storage Systems

When installed separate from (not in combination with) an on-site solar photovoltaic system, including when the building is served by a community solar PV system, to qualify for the compliance credit, the battery storage system shall be programmed by default to:

1. Start Charging from the grid at the onset of lowest priced TOU hours of the day and start discharging at the onset of highest priced TOU hours of the day, or
2. Meet the demand flexibility control requirements specified in Section 110.12(a), and shall have the capability to change the charging and discharging periods in response to signals from the local utility or a third-party aggregator.

JA12.2.3.5 Alternative Control Approved by the Executive Director

The Executive Director may approve alternative control strategies that demonstrate equal or greater benefits to one of the JA12 control strategies. To qualify for Alternative Control, the battery storage system shall be operated in a manner that increases self-utilization of the PV array output, responds to utility rates, responds to demand response signals, minimizes greenhouse gas emissions from buildings, and/or other strategies that achieve equal or greater benefits than specified in Sections JA12.2.3.1, JA12.2.3.2, JA12.2.3.3, or JA12.2.3.4. This alternative control option shall be accompanied with clear and easy to implement algorithms for incorporation into the compliance software for compliance credit calculations.

JA12.3 Interconnection and Net Energy Metering Requirements

The battery storage system and the associated components, including inverters, shall comply with all applicable requirements specified in Rule 21 and Net Energy Metering (NEM) rules as adopted by the California Public Utilities Commission (CPUC).

JA12.4 Enforcement Agency

The local enforcement agency shall verify that all Certificate of Installations are valid. The battery storage systems shall be verified as a model certified to the Energy Commission as qualified for credit as a battery storage system. In addition, the enforcement agency shall verify that the battery storage system is programmed and operational with one of the controls listed in JA12.2.3.1, JA12.2.3.2, JA12.2.3.3, JA12.2.3.4., JA12.2.3.4.5. The programmed control strategy at system final inspection and commissioning shall be the strategy that was used in the Certificate of Compliance.

(This page intentionally left blank.)

Joint Appendix JA13

Appendix JA13 – Qualification Requirements for Heat Pump Water Heater Demand Management Systems

JA13.1 Purpose and Scope

Joint Appendix JA13 provides the qualification requirements for a heat pump water heater (HPWH) demand management system (System) to meet the requirements for HPWH demand flexibility compliance credit available in the performance standards specified in Title 24, Part 6, Sections 150.1(b).

User interfaces referenced in these requirements shall be designed for use by a typical residential user.

JA13.2 Definitions

JA13.2.1 Heat Pump Water Heater Demand Management System

The HPWH Demand Management System means the following components connected to a water heater, but not the water heater itself, all of which are necessary to fulfill the primary function of the System:

(a) Any hardware or software contained inside the water heater;

(b) Any hardware or software installed on premise (including a module); and

(c) Any software contained in applications or in the cloud.

The primary function of the System is to interface with the HPWH to serve the users' domestic hot water needs and provide daily load shifting, as applicable, for the purpose of user bill reductions, maximized solar self-utilization, and grid harmonization.

JA13.2.2 Local and Remote Methods

A Local Method means a method that can be performed from within the building that does not require the System to have a live connection to an off-premise source. A temporary connection to a live off-premise source such as via a smart phone, may be used for local setup and updates.

A Remote Method means a method that is performed via a live connection to an off-premise source, such as the internet, advanced metering infrastructure (AMI), or cellular communication.

JA13.3 Qualification Requirements

To qualify for the HPWH Demand Management System performance compliance credit, the System shall be certified to the Energy Commission to meet the following requirements:

JA13.3.1 Safety Requirements

The System shall comply with applicable installation standards in the California electrical, mechanical, and plumbing codes.

A thermostatic mixing valve conforming to ASSE 1017 shall be installed on the hot water supply line following all manufacturer installation instructions or the water heater shall conform to UL 60730-1, ASSE 1082, or ASSE 1084.

JA13.3.2 Minimum Performance Requirements

The installed System shall meet or exceed the following performance specifications:

(a) **Efficiency**: meet all requirements of version 7.0 of the Northwest Energy Efficiency Alliance (NEEA) Advanced Water Heater Specification Tier 3 or higher, excluding Appendix A.

(b) **Thermal storage**: comply with the first hour rating requirements in the following table (Chapter 5, Table 501.1(2) in 2022 California Plumbing Code):

Number of bathrooms	1 to 1.5	1 to 1.5	1 to 1.5	2 to 2.5	2 to 2.5	2 to 2.5	2 to 2.5	3 to 3.5	3 to 3.5	3 to 3.5	3 to 3.5
Number of bedrooms	1	2	3	2	3	4	5	3	4	5	6
First Hour Rating (gallons)	38	49	49	49	62	62	74	62	74	74	74

JA13.3.3 Control Requirements

The requirements below are applicable to all control strategies:

(a) **Time-of-use schedules:** The System shall have the capability of storing a minimum of five time-of-use schedule(s) locally, each supporting a minimum of five distinct time periods for both weekdays and weekends, at least three separate seasonal schedules, and daylight savings time changes. The System shall support both local and remote setup, selection, and update of time-of-use schedules. Local and remote setup, selection, and update shall be possible through a user interface (such as an app).

(b) **Demand management functionality**
Upon receiving a demand management price or dispatch signal, the System shall be capable of all the following automatic event responses:

1. **Basic Load Up**: The System will store extra thermal energy without exceeding the user set point temperature. It will avoid use of electric resistance elements unless user needs cannot be met;
2. **Advanced Load Up**: The System stores extra thermal energy, where some or all of the tank may exceed the set point temperature chosen by the user, within safe operating conditions. Advanced Load Up must only be enabled after agreement by the user and utility as defined below. It will avoid use of electric resistance elements unless user needs cannot be met. Advanced Load Up will only be available in Advanced Demand Response Control mode as defined in JA13.3.3.2;
3. **Return to Standard Operation**: The System terminates any demand management function and returns to user-selected standard operation mode until the next demand management function is activated;
4. **Light Shed**: The System will defer complete recovery for the duration of the shed event unless user needs cannot be met; The water heater shall avoid use of electric resistance elements during and immediately after the event unless user needs cannot be met;
5. **Deep Shed**: same as Light Shed, but the System will completely avoid use of electric resistance elements during the event; and
6. **Full Shed**: same as Light Shed, but the System will completely avoid use of both compressor and electric resistance element during the event.

The demand management signals may be sent from a local utility, a remote aggregator, a local demand manager (e.g. local time-of-use demand manager) or be internal to the System (e.g. internal schedule- or price-based demand management).

The “Advanced Load Up” function shall only be enabled by a deliberate action of the user through the system’s physical or remote interface upon enrolling in a utility’s demand response program. The “Advanced Load Up” function shall be capable of being disabled deliberately by the user, or remotely by the utility or third-party service provider without deliberate action by the user.

For a water heater sized in accordance with JA13.3.2(b) and with the default set point as shipped from the manufacturer, the System shall be able to shift:

- A minimum of 0.5 kWh of user electrical energy per (Basic Load Up + Light Shed) event; and
- A minimum of 1 kWh of user electrical energy per (Advanced Load Up + Light Shed) event, including at least 0.5 kWh on Advanced Load Up.

(c) **Non-standard mode exception:** The demand management functionality shall be achieved in all user-selected modes except for vacation and off modes, which are deemed non-standard modes. The System shall return to the previous standard operation mode once the water heater exits from a non-standard mode.

(d) **Local time management**: In the event of a loss of power, the System settings, including operating mode, time-of-use schedules, and local clock, shall be retained, or reacquired, for at least three months. The local clock shall have a maximum drift of less than 5 minutes per year under standard operating conditions and without requiring remote connectivity.

(e) **Override and permanent disabling:** The System shall provide local and remote means for the user to override or permanently disable the demand management functions. The override shall be temporary and have a maximum duration of 72 hours. Permanent disabling shall not be available as an operating mode or as an option in the primary menu.

(f) **User interface**: The System shall provide both a remote and local user interface, such as a web-based portal or a mobile device application, that at a minimum provides the dwelling occupants access to the following information: control strategy that is currently active, remote or local demand management mode, selected time-of-use schedule if applicable, and confirmation of any settings change.

(g) **Measurement and validation**: When connected remotely, the System shall make the following data available to the local utility, remote aggregator, or local demand manager: Demand Management Override Status, Demand Management Disabled Status; power demand (watts); cumulative energy consumption (watt-hours); total energy storage capacity (watt-hours), available energy storage capacity (watt-hours).

The System shall be capable to use one of the following control strategies at the time of installation. The System also shall have the capability to switch to other control strategies if available. The "Advanced Load Up" function shall not be enabled at time of installation.

JA13.3.3.1 Time-of-Use (TOU) Control

To qualify for the TOU Control, the System shall be installed in the default operation mode to serve domestic hot water user needs while optimizing System operation to reduce user bills under the selected time-of-use schedule. The System shall load up (charge) during the lowest priced TOU hours of the day and shed (minimize charging while serving user needs) during the highest priced TOU hours.

JA13.3.3.2 Advanced Demand Response Control

To qualify for the Advanced Demand Response Control, the System shall meet the demand responsive control requirements specified in Section 110.12(a) of the 2022 Building Energy Efficiency Standards. Additionally, the System shall be capable of changing the load-up and shed periods in response to real-time or day-ahead dispatch or price signals from the local utility, a remote aggregator, or a local demand manager. If remote communication is lost for more than 12 hours while the water heater is under Advanced Demand Response Control, the water heater shall revert to TOU Control until remote communication is reestablished, and then revert back to Advanced Demand Response Control.

JA13.3.3.3 Alternative Control Strategy Approved by the Executive Director

Any party may submit a request to the Executive Director, in writing, for approval of an Alternative Control Strategy that demonstrates equal or greater benefits to one of the JA13 control strategies. To qualify as an Alternative Control Strategy, the System shall be operated in a manner that increases self-utilization of the PV array output, responds to utility rates, responds to demand response signals, and/or other strategies that achieve equal or greater benefits. The application shall include well-documented algorithms for incorporation into the compliance software for compliance credit calculations. The Executive Director may approve the proposed Alternative Control Strategy after providing an opportunity for public comment.

JA13.4 Enforcement Agency

To receive the HPWH Demand Management System compliance credit, the completed Certificate of Installation shall be a model that has been certified to the Energy Commission as qualified for the credit. This certification shall be made available for review by the local building department.

Joint Appendix JA14

Appendix JA14 – Qualification Requirements for Central Heat Pump Water Heater Systems

JA14.1 Purpose and Scope

Joint Appendix JA14 provides the qualification requirements to meet the standards for central heat pump water heater (Central HPWH) systems set forth in Title 24, Part 6, Section 170.2(d)2 and in performance standards set forth in Section 140.1 and 170.1.

JA14.2 Definitions

Basic Model means, with respect to a central HPWH, all units of a given type of product manufactured by one manufacturer; having the same primary energy source; and, which have essentially identical electrical, physical, and functional (or hydraulic) characteristics that affect energy consumption, energy efficiency, water consumption, or water efficiency.

JA14.3 Qualification Requirements

To qualify as a central HPWH for use for compliance, the central HPWH products shall be certified to the Energy Commission to meet the following requirements:

JA14.3.1 Determination of Performance Data

Manufacturers shall determine central HPWH performance data for each basic model either by testing pursuant to the requirements in (a) or by simulating pursuant to the requirements in (b) below:

(a) Testing shall be conducted in accordance with the test setup, installation, calculation procedures, and instruments described in Appendix E to Subpart G of 10 CFR Part 431 for each of the test conditions described in JA14.3.3; or

(b) Simulated performance shall be conducted using an alternative efficiency determination methods (AEDM) as described in 10 CFR part 429.70(a)-(c) to generate the performance data described in JA14.3.2. In addition, manufacturers shall only simulate the performance of other central HPWH basic models sharing the same series compressor, same type of heat exchangers, and same architecture as the tested basic model.

JA14.3.2 Performance Data Reporting

The following performance specifications shall be submitted to the Energy Commission:

a) Water heater input power;

b) Water heater output capacity; and

c) Water heater COP.

The performance data shall be provided at the following conditions:

d) Inlet ambient air temperature: Maximum, minimum, and two midpoint temperatures of the manufacturer specified operating range.

e) Inlet water temperature: Maximum, minimum, and two midpoint temperatures of the manufacturer specified operating range.

f) Outlet water temperature: Maximum, midpoint, and minimum of outlet water (setpoint) temperatures of the manufacturer specified operating range.

For conditions where defrost strategies operate, reported data shall include at least one complete defrost cycle, or alternatively, for each model submitted for approval, provide a description of the defrost strategy including method, cycle length, and process.

JA14.3.3 Basic Model Test Condition

The Central HPWH basic model shall be tested at the following conditions:

(a) Inlet ambient air temperature: If the minimum operating temperature is above 40°F, the following three test conditions are required: the DOE test Procedure condition, the minimum, and one midpoint temperatures within the manufacturer specified operating range. If the minimum operating temperature limit is below 40°F, the following four test conditions are required: the DOE test procedure condition, the minimum, and two midpoint temperatures within the manufacturer specified operating range.

(b) Two inlet water temperatures: maximum and minimum within the manufacturer specified operating range.

(c) Two outlet water temperatures: Maximum and minimum outlet water (setpoint) temperatures within the manufacturer specified operating range.

JA14.4 Design Condition Documentation Requirements

The Central HPWH system shall be capable of supplying hot water at design outlet water temperature under specified operating ranges for:

a) Minimum and maximum ambient air temperature;

b) Minimum and maximum cold-water temperature;

c) Minimum and maximum building demand at design draw and recovery conditions and duration; and

d) Recirculation loop heat loss.

Design documentation shall specify the operating conditions at which the primary heat pump water heater can supply hot water at design outlet water temperature without engaging auxiliary heating mechanism.

Residential Appendix RA

Appendix RA1 - Alternative Residential HERS Field Verification and Diagnostic Test Protocols

RA1.1 Alternative Protocol Approval

Field verification and diagnostic test protocols other than those described in Reference Residential Appendix RA3 are possible, and when field verification or diagnostic testing measurements can be reliably determined by methods, procedures or instrumentation other than those specified in Reference Residential Appendix RA3, such alternative protocols shall be allowed if approved by the Commission. The Commission may grant such approval after reviewing submittals from the applicant. Submittals shall adhere to the application process of Title 24, Part 1 Section 10-109(j). Alternative Protocols that are approved by the Commission shall be published as an addendum to Reference Residential Appendix RA1.

RA1.1.1 Alternative Refrigerant Charge Verification Protocol Approval

The applicant for a special case refrigerant charge verification protocol shall provide information that specifies:

(a) the required instrumentation,

(b) the instrumentation accuracy,

(c) the parameters measured,

(d) the required calculations,

(e) the target values for system operating parameters for verification of optimum system operation,

(f) the allowable deviations from target values for system operating parameters, and

(g) the requirements for reporting system faults.

Manufacturers that elect to utilize an alternative protocol for compliance with refrigerant charge verification requirements in the Standards shall demonstrate in their application for approval by the Energy Commission that use of the alternative refrigerant charge verification protocol produces equipment performance at a sensible EER at AHRI Standard 210/240 standard rating conditions (80°F indoor dry-bulb, 67°F indoor wet-bulb, and 95°F outdoor dry-bulb) that deviates less than or equal to 5 percent from the sensible EER determined by laboratory testing at the AHRI Standard 210/240 standard rating conditions when the air conditioner is charged with the manufacturer's specified refrigerant charge determined by measurement of the weight of the specified refrigerant charge. The deviations from the manufacturer's target values of system operating parameters, that correspond to the maximum allowable 5 percent deviation in sensible EER shall be determined and reported to the Energy Commission by the manufacturer, and shall

be utilized as the required compliance criteria for HERS Rater refrigerant charge verification. Deviations of system operating parameters from the manufacturer's target values for less than 5 percent deviation in sensible EER (tighter tolerances) may be specified by the manufacturer for use by the installing contractor.

Manufacturers using an alternative refrigerant charge verification protocols shall, upon request, provide comprehensive engineering specification documentation, installation and technical field service documentation, and user instructions documentation to installers and service personnel that utilize the procedure.

RA1.2 Winter Setup for the Standard Charge Verification Procedure

RA1.2.1 Purpose and Scope

The purpose of this procedure is to verify that residential split system air conditioners and heat pumps have the required refrigerant charge and that the metering device is working as designed. The procedures only apply to ducted split system central air-cooled air conditioners and ducted split system central air-source heat pumps for which the system manufacturer has specified that this procedure may be used to verify refrigerant charge.

The Standard Charge Verification Procedure (Section RA3.2.2 of the Reference Residential Appendices) calls for the outdoor temperature to be within the manufacturer's specified range. When outdoor temperatures are below 55°F, the setup for the Standard Charge Verification Procedure must be modified in order to achieve the proper system pressure differential needed for the procedure. The Winter Setup for the Standard Charge Verification Procedure (Winter Charge Setup) allows both installers and HERS Raters to utilize the Standard Charge Verification Procedure of RA3.2.2 in the winter. Note that the Weigh-in Charging Procedure specified in Section RA3.2.3 may also be used only by the installer.

The Winter Charge Setup creates the right conditions at the unit being tested for outdoor temperatures above 37°F and below 71°F that allow the system to operate in the same range of pressure differences between the low side pressure and the high side pressure as occurs during warm outdoor temperatures.

The Winter Charge Setup is used only for units equipped with variable metering devices, which include Thermostatic Expansion Valves (TXV) and Electronic Expansion Valves (EXV) for which the manufacturer specifies subcooling as the means for determining the proper charge for the unit, including units equipped with micro-channel heat exchangers. The Winter Charge Setup achieves an appropriate high side - low side pressure differential to conduct the Standard Charge Verification Procedure, by restricting the airflow at the condenser fan outlet through the use of a Condenser Outlet Air Restrictor. Once this pressure differential is achieved, the Variable Metering Device Calculations are conducted in the same way as the variable metering device procedures described in Reference Residential Appendix RA 3.2.2.6.2. All other applicable requirements of Section RA3.2.2 remain the same and must also be completed when using the Winter Charge Setup.

Definition - Condenser Outlet Air Restrictor: A device which restricts the free area of the outlet from the condenser fan to reduce the air flow, but does not interfere with air entering the condenser coil. The amount of restriction shall be adjustable to allow the operator to vary the airflow to achieve the target refrigerant pressure difference.

RA1.2.2 Winter Setup for the Standard Charge Verification Procedure

a) Install the condenser outlet air restrictor on the outlet from the condenser fan:

   Position the restrictor so it does not interfere with the inlet airflow to the condenser.

   Start the air conditioner or heat pump in the cooling mode and restrict the outlet until the difference between the high side pressure and the low side pressure is between 160 psi and 220 psi for R-410A refrigerant and 100 to 145 psi for R-22 refrigerant.

   160 psi ≤ (P_{high}, – P_{low}) ≤ 220 psi for R-410A refrigerant;
   100 psi ≤ (P_{high}, – P_{low}) ≤ 145 psi for R-22 refrigerant

   Allow the unit to stabilize for 15 minutes, watching the pressures to make sure the differential achieves and remains within 160 psi ≤ (P_{high}, – P_{low}) ≤ 220 psi for R-410A refrigerant

   100 psi ≤ (P_{high}, – P_{low}) ≤ 145 psi for R-22 refrigerant

b) Follow the test procedures specified in the Reference Residential Appendix, Section RA3.2.2.6.2, Variable Metering Device Calculations to determine compliance.

RA1.2.3 Additional Requirements and Qualifications

The Winter Charge Setup may only be used for equipment for which the air conditioning manufacturer approves the use of the Winter Charge Setup. Refer to the Energy Commissions website for the list of split system air conditioner units approved by the manufacturers to use the Winter Charge Setup. In addition to the requirements of Section RA1.2, manufacturers may issue additional instructions/clarification for the equipment and procedures required to be used to conduct the Winter Charge Setup. These additional instruction/clarifications shall also be available on the Energy Commission website: www.energy.ca.gov/title24/.

Winter Charge Setup may be used for systems that use a target subcooling for refrigerant charge verification, including units equipped with micro-channel heat exchangers where the manufacturer specifies subcooling for measuring refrigerant charge.

Similar to the Standard Charge Verification Procedure for warm weather, the Winter Charge Setup may be used by the Installer and/or the HERS Rater.

The system shall comply with the minimum system airflow requirements specified in Reference Residential Appendix Section RA3.3.3.1.

Similar to the Standard Charge Verification Procedure for warm weather, the Winter Charge Setup requires that the return air dry bulb temperature must be maintained within the manufacturer's specification during the test, as specified in RA3.2.2. Suggestions for methods to accomplish warmer return air are posted on the Energy Commission website at the following link:

http://www.energy.ca.gov/title24/orc/hvac/Similar to the Standard Charge Measurement Procedure for warm weather, the Winter Charge Setup procedure does not relieve the installing contractor from any obligations to follow manufacturers' specifications. The procedures in Section RA1.2 are used to demonstrate compliance with Title 24, Part 6 requirements for refrigerant charge verification.

(This page intentionally left blank.)

Residential Appendix RA2

Appendix RA2 – Residential HERS Verification, Testing, and Documentation Procedures

RA2.1 California Home Energy Rating Systems

Compliance for certain energy efficiency measures, as specified by the Commission, requires field verification and diagnostic testing of dwelling units by a certified Home Energy Rating System (HERS) Rater. The Commission approves HERS Providers, subject to the Commission's HERS regulations, which appear in the California Code of Regulations, Title 20, Division 2, Chapter 4, Article 8, Sections 1670-1675. Approved HERS Providers are authorized to certify HERS Raters and are required to maintain quality control over HERS Rater field verification and diagnostic testing activities.

When the Certificate of Compliance documentation for a dwelling unit indicates that field verification and diagnostic testing of specific energy efficiency measures are required as a condition for complying with Title 24, Part 6, an approved HERS Provider and certified HERS Rater shall be used to conduct the field verification and diagnostic testing according to the applicable procedures in Appendix RA2. HERS Raters shall be considered special inspectors by enforcement agencies and shall demonstrate competence, to the satisfaction of the building official, for the visual inspections and diagnostic testing that they perform. As specified by California Code of Regulations, Title 20, Division 2, Chapter 4, Article 8, Section 1673(j)(2), "Providers and Raters shall be independent entities from the builder and from the subcontractor installer of energy efficiency improvements field verified or diagnostically tested." An "Independent Entity means having no financial interest in, and not advocating or recommending the use of any product or service as a means of gaining increased business with, firms or persons specified in California Code of Regulations Title 20, Division 2, Chapter 4, Article 8, Sections 1671 and 1673(j)." Third Party Quality Control Programs approved by the Commission may serve some of the functions of HERS Raters for field verification purposes as specified in Section RA2.7.

The remainder of this Appendix RA2 describes the:

(a) Measures that require field verification or diagnostic testing;

(b) Requirements for documentation and communication for HERS verification compliance processes;

(c) Responsibilities assigned to each of the parties involved in the field verification and diagnostic testing process;

(d) Requirements for procedures for installing contractors and Certificate of Installation documentation;

(e) Requirements for HERS Rater field verification and diagnostic testing and documentation procedures;

(f) Requirements for sampling procedures for HERS verification compliance;

(g) Requirements for Third Party Quality Control Programs;

(h) Requirements for HERS verification compliance for alterations to existing dwellings.

RA2.2 Measures that Require Field Verification and Diagnostic Testing

Table RA2-1 describes the measures that require installer certification and HERS Rater field verification and diagnostic testing, and identifies the protocol or test procedure in the Reference Residential Appendices that shall be used for completing installer and HERS Rater field verification and diagnostic testing.

Table RA2-1 – Summary of Measures Requiring Field Verification and Diagnostic Testing

Measure Title	Description	Procedure(s)
	Duct Measures	
Duct Sealing	Component Packages require that space conditioning ducts be sealed. If sealed and tested ducts are claimed for compliance, field verification and diagnostic testing is required to verify that approved duct system materials are utilized, and that duct leakage meets the specified criteria.	RA3.1.4.3
Duct Location, Surface Area and R-value	Compliance credit can be taken for improved duct location, surface area and R-value. Field verification is required to verify that the duct system was installed according to the design, including location, size and length of ducts, duct insulation R-value and installation of buried ducts.[1] For buried ducts measures, Duct Sealing and High Quality Insulation Installation (QII) is required.	RA3.1.4.1
Verification of low leakage ducts located entirely in conditioned space	Duct system location shall be verified by visual inspection and diagnostic testing. Compliance credit can be taken for verified duct systems with low air leakage to the outside when measured in accordance with Reference Residential Appendix Section RA3.1.4.3.8. Field Verification for ducts in conditioned space is required. Duct sealing is required.	RA3.1.4.3.8
Low Leakage Air-handling Units	Compliance credit can be taken for installation of a factory sealed air handling unit tested by the manufacturer and certified to the Commission to have met the requirements for a Low Leakage Air-Handling Unit. Field verification of the air handler's model number is required. Duct Sealing is required.	RA3.1.4.3.9
Verification of Return Duct Design	Verification to confirm that the return duct design conform to the applicable criteria given in TABLE 150.0-B, TABLE 150.0-C, TABLE 160.3-A, or TABLE 160.3-B.	RA3.1.4.4
Verification of Air Filter Device Design	Verification to confirm that the air filter devices conform to the requirements given in applicable Standards Sections 150.0(m)12 or 160.2(b)1.	RA3.1.4.5
Verification of Prescriptive Bypass Duct- Requirements	Verification to confirm zonally controlled systems comply with the bypass duct requirements in Section 150.1(c)13 or 170.2(c)3C.	RA3.1.4.6
	Air Conditioning Measures	
Improved Refrigerant Charge	Component Packages require in some climate zones that air-cooled air conditioners and air-source heat pumps be diagnostically tested in the field to verify that the system has the correct refrigerant charge. For the performance method, the Proposed Design is modeled with less efficiency if diagnostic testing and field verification is not performed. The system must also meet the prerequisite minimum System Airflow requirement.	RA3.3 RA3.2 RA1.2
Installation of Fault Indicator Display	Component Packages specify that a Fault Indicator Display can be installed as an alternative to refrigerant charge testing. The existence of a Fault Indicator Display has the same calculated benefit as refrigerant charge testing. Field verification is required.	RA3.4.2
Verified System Airflow	When compliance requires verified system airflow greater than or equal to a specified criterion, field verification and diagnostic testing is required.	RA3.3
Air-handling Unit Fan Efficacy	When compliance requires verified fan efficacy (Watt/cfm) less than or equal to a specified criterion, field verification and diagnostic testing is required.	RA3.3
Verified Energy Efficiency Ratio (EER/EER2)	Compliance credit can be taken for increased EER/EER2 by installation of specific air conditioner or heat pump models. Field verification is required.[2]	RA3.4.3 RA3.4.4.1
Verified Seasonal Energy Efficiency Ratio (SEER/SEER2)	HERS Rater field verification of the SEER/SEER2 rating is required for some systems.	RA3.4.3 RA3.4.4.1
Rated Heat Pump Capacity Verification	When performance compliance uses a heat pump, the rated capacity of the installed system shall be verified to be greater than or equal to the specified value.	RA3.4.4.2
Evaporatively Cooled Condensers	Compliance credit can be taken for installation of evaporatively cooled condensers. Field verification of duct leakage is required. Field verification of refrigerant charge is required. Field verification of EER/EER2 is required.	RA3.1.4.3, RA3.2 RA3.4.3. RA3.4.4.1
Variable Capacity Heat Pump (VCHP) Compliance Option	When performance compliance uses the VCHP compliance option, the system shall be field verified to confirm it meets the eligibility requirements.	RA3.4.4.3

	Ventilation Cooling Measures	
Whole House Fan	When performance compliance uses a whole house fan, the installed whole house fan airflow rate (cfm) and fan efficacy (W/cfm) shall be verified to be equal to or better than the specified values.	RA3.9
Central Fan Ventilation Cooling System	When performance compliance uses a central fan ventilation cooling system (CFVCS), the installed CFVCS ventilation airflow rate (cfm) and fan efficacy (W/cfm) shall be verified to be equal to or better than the specified values.	RA3.3.4
	Mechanical Ventilation Measures for Improved Indoor Air Quality	
Continuous Whole-Building Mechanical Ventilation Airflow	Measurement of whole-building mechanical ventilation is mandatory for newly constructed buildings.	RA3.7.4.1
Intermittent Whole-Building Mechanical Ventilation Airflow	Measurement of whole-building mechanical ventilation is mandatory for newly constructed buildings.	RA3.7.4.2
Kitchen Local Mechanical Exhaust Verification	Verification of kitchen local mechanical exhaust is mandatory for newly constructed buildings.	RA3.7.4.3
Heat Recovery Ventilation (HRV) or Energy Recovery Ventilation (ERV) Rated Performance Verification	When performance compliance requires verification of the HRV/ERV fan efficacy (W/cfm) or heat recovery efficiency, then the installed ventilation system shall be verified.	RA3.7.4.4
	Building Envelope Measures	
Building Envelope Air Leakage	Compliance credit can be taken for reduced building envelope air leakage. Field verification and diagnostic testing is required. Multifamily dwelling units are required to have enclosure leakage verified when supply or exhaust ventilation systems are installed.	RA3.8
Quality Insulation Installation (QII)	Compliance Software recognizes standard and improved envelope construction. Quality Insulation Installation is a prescriptive measure in all climate zones for newly constructed buildings and additions greater than 700 square feet, except low-rise multifamily buildings in Climate Zone 7. Field verification is required.	RA3.5
Quality Insulation Installation for Spray Polyurethane Foam (SPF) Insulation	A HERS Rater shall verify the installation of SPF insulation whenever R-values other than the default R-value per inch are used for compliance.	RA3.5.6
	Single Family Domestic Hot Water Measures	
Verified Pipe Insulation Credit (PIC-H)	Inspection to verify that all hot water piping in non-recirculating systems is insulated and that corners and tees are fully insulated. No piping should be visible due to insulation voids with the exception of the last segment of piping that penetrate walls and delivers hot water to the sink, appliance, etc.	RA3.6.3.
Verified Parallel Piping (PP-H)	Inspection that requires that the measured length of piping between the water heater and single central manifold does not exceed five feet	RA3.6.4
Verified Compact Hot Water Distribution System Expanded Credit (CHWDS-H-EX)	Field verification to insure that the eligibility criteria specified in RA 3.6.5 are met.	RA3.6.5
Demand Recirculation: Manual Control (RDRmc-H)	Inspection to verify that all recirculating hot water piping is insulated and that corners and tees are fully insulated. No piping should be visible due to insulation voids	RA3.6.6
Demand Recirculation: Sensor Control(RDRsc-H)	Inspection to verify that all recirculating hot water piping is insulated and that corners and tees are fully insulated. No piping should be visible due to insulation voids.	RA3.6.7
Verified Drain Water Heat Recovery System (DWHR-H)	Inspection to verify that the DWHR unit(s) and installation configuration match the compliance document and the DWHR(s) is certified to the Commission to have met the requirements.	RA3.6,9

	Multi Family Domestic Hot Water Heating Measures	
Multiple Recirculation Loop Design for DHW Systems Serving Multiple Dwelling Units	Inspection that a central DHW system serving a building with more than eight dwelling units has at least two recirculation loops, each serving roughly the same number of dwelling units. These recirculation loops may the same water heating equipment or be connected to independent water heating equipment.	RA3.6.8
Verified Drain Water Heat Recovery System (DWHR-H)	Inspection to verify that the DWHR unit(s) and installation configuration match the compliance document and the DWHR(s) is certified to the Commission to have met the requirements.	RA3.6.9

1. Note: Compliance credit for increased duct insulation R-value (not buried ducts) may be taken without field verification if the R-value is the same throughout the building, and for ducts located in crawlspaces and garages where all registers are either in the floor or within 2 feet of the floor. These two credits may be taken subject only to enforcement agency inspection.

2. Note: The requirement for verification of a high EER/EER2 does not apply to equipment rated only with an EER/EER2.

RA2.3 Documentation and Communication Requirements for HERS Verification Compliance

The building energy compliance features, HERS field verification requirements, and applicable special feature eligibility criteria shall be identified on a Certificate of Compliance that conforms to the requirements in Standards Sections 10-103(a)1 and 10-103(a)2. The builder or subcontractor shall submit all applicable Certificate of Installation documentation in conformance with the requirements in Standards Section 10-103(a)3 and the procedures described in RA2, and shall provide certification that the construction/installation complies with all applicable requirements on the Certificate of Compliance and complies with all applicable field verification and eligibility criteria. Field verification shall be performed by a HERS Rater and documented on applicable Certificate of Verification documentation that conforms to the requirements of Standards Section 10-103(a)5 and the procedures in RA2.

RA2.3.1 Documentation Constraints, Registration, and Verification

The performance compliance method allows for preparation of Certificate of Compliance documentation for multifamily buildings that precludes use of certain HERS verification compliance credits that would otherwise be available for compliance credit as described in Section RA2.3.1.1 below. Document registration is required for all dwelling units that utilize building energy features for which HERS verification is required as introduced in Section RA2.3.1.2 and described in the procedures in subsequent sections of RA2. Verification of electronic documentation is introduced in section RA2.3.1.3 and is applicable to many aspects of the documentation procedures described in subsequent sections of RA2.

RA2.3.1.1 Whole-Building Compliance Approach for Multifamily Buildings

For multifamily buildings, a single Certificate of Compliance may be prepared for the whole building, however *dwelling unit-specific* Certificates of Installation and *dwelling unit-specific* Certificates of Verification shall be required for each individual dwelling unit in the building. Thus, for the whole-building compliance approach in a multifamily building utilizing features that require HERS verification, the required energy compliance documentation for each dwelling unit shall consist of a copy of the whole-building Certificate of Compliance, the applicable *dwelling unit-specific* Certificates of Installation, and the applicable *dwelling unit-specific* Certificates of Verification.

When the whole-building compliance approach is utilized for a multifamily building, some energy efficiency measures that require HERS field verification shall not be used for compliance credit in performance compliance calculations. These measures require *dwelling unit-specific* information input to the compliance software, and *dwelling unit-specific* information that must be shown on the Certificate of Compliance, thus these measures cannot be properly documented using a whole-building Certificate of Compliance (which is not a *dwelling unit-specific* document type). The HERS measures that shall not be utilized for the multifamily whole-building compliance approach are:

(a) Buried Ducts credit

(b) Deeply Buried Ducts credit

(c) Reduced Duct Surface Area credit

(d) Building Envelope Sealing credit for reduced outdoor air infiltration (blower door test)

All other measures that require HERS field verification and diagnostic testing are allowed for use with the multifamily whole-building compliance approach.

RA2.3.1.2 Document Registration

For all low-rise residential buildings for which compliance requires HERS field verification, all Registered Compliance Document and Compliance Registration Package (Certificate of Compliance, Certificate of Installation, and Certificate of Verification) required for the dwelling unit shall be submitted for registration and retention to a HERS Provider data registry. When submittal of documentation to a HERS Provider data registry is required, the completed documents are referred to as registered documents, and the process of completing these documents by submitting information (Compliance Registration Package) and certification signatures to the HERS Provider data registry is called registration. Refer to Reference Joint Appendix JA1 for the definitions for HERS Provider data registry, and for registered document. Additional specification for the document registration process is given in Reference Joint Appendix JA7.

RA2.3.1.3 Verification of Registered Documents

Printed paper copies or electronic copies of the completed, signed, registered Certificate of Compliance, Certificate of Installation, and Certificate of Verification documentation shall be allowed for use for required submittals to enforcement agencies, subject to verification that the information shown on the submitted document(s) conforms to the information shown on the current revision of the registered document(s) on file in the HERS Provider data registry for the applicable dwelling unit.

The HERS Provider shall make document verification services available via phone, internet, or utilization of digital technologies, to enable enforcement agency officials, builders, installation contractors, HERS Raters, and other authorized users of the HERS Provider data registry to verify that the information shown on submitted documentation is consistent with the information shown on the current revision of the registered document on file in the HERS Provider data registry for the applicable dwelling unit. President

RA2.3.2 Summary of Documentation and Communication Procedures

The documentation and communication process for measures that require field verification and diagnostic testing is summarized below. The subsequent sections of this chapter contain additional information and requirements that apply to all situations; however the section on alterations, RA2.8, applies specifically to the differences in the requirements for alterations. Section RA2.7 applies specifically to the differences in the requirements for Third Party Quality Control Programs.

(a) A Certificate of Compliance shall be prepared for each dwelling unit or building that requires a building permit. The Certificate of Compliance information shall be submitted to the HERS Provider data registry, validated, and signed by the documentation author and the building's designer or owner to register the documentation prior to submittal of the Certificate of Compliance to the enforcement agency for approval. The documentation author and the building designer or owner shall submit certification to the HERS Provider data registry electronically.

(b) The builder shall arrange for the services of a certified HERS Rater prior to installation of the measures, so that once the installation is complete the HERS Rater has ample time to complete the field verification and diagnostic testing without delaying final approval of the dwelling unit by the enforcement agency. The Builder shall make available to the HERS Rater a copy of the Certificate of Compliance that was approved/signed by the building designer or owner and submitted to the enforcement agency. The builder or subcontractor shall install the measure(s) that require field verification and diagnostic testing. When the installation is complete, the builder or subcontractor shall perform diagnostic testing on the installation using the applicable procedures specified in Reference Residential Appendix RA2.5, RA3, and RA1. If testing confirms compliance, the builder or subcontractor shall submit the required information and signatures electronically to the HERS Provider data registry to register the applicable Certificate(s) of Installation, then post a copy of the applicable registered Certificate(s) of Installation at the building site for review by the enforcement agency in conjunction with requests for final inspection for each dwelling unit.

(c) The HERS Rater shall confirm that registration of the Certificate(s) of Compliance and the applicable Certificate(s) of Installation has been completed for each dwelling unit that requires HERS verification. The HERS Rater shall complete the applicable field verification and diagnostic testing as specified in Section RA2.6. The HERS Rater shall submit the required field verification and diagnostic testing information and signatures electronically to the HERS Provider data registry to register the applicable Certificate of Verification documentation.

(d) The HERS Provider shall make available registered copies of the Certificate(s) of Verification to the HERS Rater, builder, enforcement agency and other authorized users of the HERS Provider data registry. If a building owner is identifiable, the HERS Provider shall make available registered copies of the Certificate(s) of Verification to that person.

(e) The enforcement agency shall not approve a dwelling unit until the enforcement agency has received the required registered Certificate(s) of Verification, posted at the building

site for review in conjunction with requests for final inspection for the dwelling. The HERS Provider shall make document verification services available, to enforcement agencies, builders and contractors, HERS Raters, the Energy Commission, and other authorized users of the HERS Provider data registry. The HERS Provider shall ensure that the content and approval signatures for copies of submitted Certificate(s) of Compliance, Certificate(s) of Installation, and Certificate(s) Verification are retained as specified by Title 20, Division 2, Chapter 4, Article 8, Section 1673(e).

RA2.4 Summary of Responsibilities

Section RA2.4 summarizes responsibilities set forth in Appendix RA2 and organizes them by the responsible party. This section is not, however, a complete accounting of the responsibilities of the respective parties.

RA2.4.1 Builder

The builder shall make arrangements for submittal of the Certificate of Compliance information and certification signatures to the HERS Provider data registry for dwelling units with features that require HERS verification. The builder shall make arrangements for the services of a certified HERS Rater prior to installation of the features, so that once the installation is complete the HERS Rater has ample time to complete the field verification and diagnostic testing without delaying final approval of the building permit by the enforcement agency. The Builder shall make available to the HERS Rater a copy of the Certificate of Compliance that was approved/signed by the building designer or owner and submitted to the enforcement agency.

The builder or subcontractor responsible for the installation shall complete and sign all applicable Certificates of Installation to certify that the installation work meets the requirements for compliance credit shown on the Certificate of Compliance and that all applicable field verification and diagnostic test results reported on Certificates of Installation are accurate. The builder or subcontractor shall post a copy of all applicable Certificates of Installation at the construction site for review by the enforcement agency in conjunction with requests for final inspection for each dwelling unit. Alternatively, the enforcement agency may elect to view the certificates on an approved Data Registry. The builder or subcontractor shall also make available to the HERS Rater copies of all applicable Certificates of Installation.

If the builder utilizes group sampling for HERS verification compliance, the builder, builder's authorized representative, or the HERS Rater shall identify the dwelling units to be included in the sample group for field verification and diagnostic testing. The HERS Rater, with no direction from the installer or builder, shall randomly select one dwelling unit from a sample group for field verification and diagnostic testing upon receiving the builder's or builder representative's request for HERS verification of that group.

The builder shall arrange for copies of all applicable registered Certificates of Verification to be posted at the building site for review by the enforcement agency in conjunction with requests for final inspection for each dwelling unit. Alternatively, the enforcement agency may elect to view the certificates on an approved Data Registry.

When re-sampling reveals a failure (see Section RA2.6.4), the builder is required to offer at no charge to all building owners for occupied dwelling units in the group to complete field verification, diagnostic testing and corrective action if necessary. Building owners may decline to have field verification and diagnostic testing and corrective action completed for the dwelling unit. The builder shall report the identifying location of any dwelling unit in which the building owner declines field verification and diagnostic testing and corrective action to the HERS Provider. The builder shall take corrective action as required in all unoccupied dwelling units in the group and in occupied dwelling units in the group where building owners have accepted field verification, diagnostic testing and corrective action.

The builder shall leave in the building, for the building owner at occupancy, copies of all compliance, operating, maintenance, and ventilation information specified in applicable sections of Title 24, Part 1, Section 10-103(b).

RA2.4.2 HERS Provider and Rater

The HERS Provider shall maintain a data registry with the capability to receive and store electronic data and image information provided by authorized users of the data registry sufficient to facilitate administration of all applicable document registration procedures and HERS compliance verification procedures as described in Reference Residential Appendix RA2 and Reference Joint Appendix JA7. Data registry capabilities include a secure web-based interface accessible by authorized users, and the ability to receive and process data transfer files generated by the Title 24 performance compliance software tools or other approved data input software. For sampling purposes, the HERS Provider shall maintain a list of the dwelling units in a group, the features that require Field Verification and Diagnostic Testing, the dwelling units selected for sample testing for each feature and the dwelling units that were not tested, the results of the sample testing, the dwelling units that were tested and verified as a result of re-sampling, and any corrective action taken.

For all dwelling units that require HERS verification for compliance, the HERS Provider shall retain records of all information and approval signatures for completed Certificates of Compliance, Certificates of Installation, and Certificates of Verification for a period of ten years as specified by Title 20, Division 2, Chapter 4, Article 8, Section 1673(e).

The HERS Rater who provides field verification and diagnostic testing shall transmit the required test results and certification signatures to the HERS Provider data registry. Registered Certificates of Verification from the Provider shall be made available for the tested dwelling unit and each of the remaining untested dwelling units from a designated group for which compliance is verified based on the results of a sample test. The registered Certificates of Verification shall be made available to the HERS Rater, the builder, the enforcement agency, and to other authorized users of the HERS Provider data registry.

The HERS Rater shall produce a separate Certificate of Verification for each dwelling unit that meets the requirements for compliance. The registered Certificate of Verification shall have unique HERS Provider-designated identifiers for registration number and sample group number, and shall include lot location or address, building permit number, time and date stamp, Provider logo, water mark or official seal, and indicate if the dwelling unit has been tested or if it was an untested dwelling unit approved as part of sample group. The HERS Rater shall not submit a

Certificate of Verification for a dwelling unit that does not have a completed Certificate of Installation submitted by the installer as required in Section RA2.5.

If field verification and diagnostic testing on a sampled dwelling unit identifies a failure to meet the requirements for compliance credit, the HERS Rater shall report to the HERS Provider, the builder, and the enforcement agency that re-sampling will be required.

If re-sampling identifies another failure, the HERS Rater shall report to the HERS Provider, the builder, and the enforcement agency that field verification and diagnostic testing will be required for all the untested dwelling units in the group. The report shall specify the identifying location of all dwelling units that shall be fully tested.

(a) The HERS Provider shall also report to the builder once diagnostic testing and field verification has shown that the failures have been corrected in all of the dwelling units except those for which the building owner has declined field verification, diagnostic testing, and corrective action. When field verification and diagnostic testing confirm that the requirements for compliance have been met, the HERS Provider shall make available the applicable registered Certificate(s) of Verification for each dwelling unit in the group.

The HERS Provider shall file a report with the enforcement agency if there has been a failure on a re-sample within a group, explaining all actions taken (including field verification, testing, corrective actions, offers to building owners for testing and corrective action, and building owner declines of such offers) to bring into compliance dwelling units for which full testing has been required.

RA2.4.3 Third Party Quality Control Program

Third Party Quality Control Programs (TPQCP) verify the work of participating installers, collect and evaluate more detailed data than necessary for compliance, identify in real time during the installation invalid and inaccurate installer testing and noncompliant installations, and enable corrected testing with the goal of bringing installations into compliance before the installer leaves the job site. TPQCP personnel and participating TPQCPs do not sign Certificate of Verification documentation, given that they provide assistance and quality control to HERS Raters, who remain responsible for this documentation.

An approved Third Party Quality Control Program shall:

(a) Provide training to participating program installers, installing but not limited to contractors, subcontractors, and technicians, to ensure proficiency in:

i. Quality HVAC installation procedures, common causes of failure, and corrections.

ii. Understanding of the Standards requirements for field verification and diagnostic testing of measures, which are subject to TPQCP program procedures

iii. Understanding all applicable specifications for field verification and diagnostic testing procedures specified in the Reference Residential Appendices.

iv. Any applicable specialized TPQCP-specific procedures.

(b) Collect field verification and diagnostic test data (data) from participating installers for each installation completed,

(c) Confirm the location of the system undergoing testing using an electronic tracking means such as Global Positioning Satellite (GPS) technology,

(d) Provide data checking analysis to evaluate the validity and accuracy of the collected data to independently determine whether compliance has been achieved, and to uncover invalid or erroneous information,

(e) Provide real-time direction to the installer to retest and correct problems when data checking determines that compliance has not been achieved, or erroneous information is present, so that testing can be redone and corrections can be made before the installer leaves the site,

(f) Ensure the installer resubmits updated data from new testing when retesting and correction is completed,

(g) Maintain a database of all data submitted by participating TPQCP installers, and

(h) Enable Energy Commission staff to query retained TPQCP data or documents.

TPQCPs do not impose restrictions on HERS Raters or Providers that limit their independence or ability to properly perform their functions, nor do they impose restrictions on the HERS Rater's use of equipment (beyond those required by the Energy Commission).

Refer to RA2.7 for additional detail describing the roles and responsibilities and approval procedures for TPQCP.

RA2.4.4 Enforcement Agency

The enforcement agency at its discretion may require independent testing and field verification to be scheduled so that it can be completed in conjunction with the enforcement agency's required inspections, or observe the field verification and diagnostic testing performed by builders, subcontractors or the certified HERS Rater in conjunction with the enforcement agency's required inspections to corroborate the results documented on the Certificate(s) of Installation and on the Certificate(s) of Verification.

For dwelling units that have used a compliance alternative that requires field verification and diagnostic testing, the enforcement agency shall not approve a dwelling unit until the enforcement agency has received, in accordance with Title 24, Part 1 Section 10-103(a), Section 10-103(d) and the procedures in Appendix RA2, a registered copy of the Certificate of Compliance that has been completed and signed by the person responsible for the design; all applicable registered Certificates of Installation that have been completed and signed by the builder or subcontractor, and all applicable registered Certificates of Verification that have been completed and signed by the HERS Rater in conjunction with requests for final inspection for each dwelling unit. The HERS Provider shall make document verification services available to enforcement agencies, builders and contractors, HERS Raters, the Energy Commission, and other authorized users of the Provider data registry.

If necessary to avoid delay of approval of dwelling units completed when outside temperatures are below 55°F, the enforcement agency may approve compliance with the refrigerant charge verification requirements when installers have used the Weigh-in Charging Method described in Reference Residential Appendix RA3, Section RA3.2.3.1 and have not used the Section RA3.2.3.2

option for HERS verification compliance. This approval will be on the condition that installers submit to the enforcement agency a registered Certificate of Installation that includes a signed declaration indicating agreement to return to correct refrigerant charge if a HERS Rater determines at a later time when the outside temperature is 55°F or above, that correction is necessary. Installers must also notify homeowners that their systems have not had their charge verified. The HERS Provider shall track these projects to ensure a HERS Rater conducts the required refrigerant charge verification for all such systems. When the outdoor temperature is 55°F or above, the HERS Rater shall use the RA3.2.2 standard charge verification procedure, or a procedure approved by the HVAC system manufacturer and Energy Commission for the refrigerant charge verification. The HERS Rater shall report the diagnostic results on the applicable Certificate of Verification, and shall register the certificate with the HERS Provider. When refrigerant charge verification testing performed by the HERS Rater indicates adjustment to the charge is required, the HERS Provider shall notify the installer, and the builder or building owner that corrective action is required. The HERS Provider may also notify the enforcement agency that corrective action is required. All air-cooled air conditioners and air-source heat pumps that utilize the Weigh-In Method shall be verified by a HERS Rater using one of the applicable refrigerant charge verification procedures. Compliance with HERS verification requirements cannot utilize group sampling procedures when the installer utilized the Weigh-In Method.

RA2.5 Installer Requirements - Certificate of Installation Documentation

Certificates of Installation are required when dwelling units utilize features, materials, components, or manufactured devices that are required for compliance with the Appliance Efficiency Regulations and Title 24, Part 6. Certificates of Installation shall indicate the installed features, materials, components, or manufactured devices are in conformance with the specifications listed on the Certificate of Compliance for the dwelling. The builder or the installing subcontractor eligible under Division 3 of the Business and Professions Code to accept responsibility for construction or installation, in the applicable classification for the scope of work, shall sign and submit Certificate of Installation documentation and post a copy of the Certificate(s) at the building site for review by the enforcement agency in conjunction with requests for final inspection for each dwelling unit. Alternatively, the enforcement agency may elect to view the certificates on an approved Data Registry.

When the dwelling unit does not require HERS field verification for compliance, the Certificates of Installation that are posted in the field for review by the enforcement agency at final inspection are not required to be registered certificates from a HERS Provider data registry, but shall conform to all other applicable requirements of 10-103(a)3. The remainder of Section RA2.5 describes the documentation procedures for Certificates of Installation for dwelling units that require HERS verification.

RA2.5.1 Field Verification, Diagnostic Testing, and Certificate of Installation Registration

For the features, materials, components, or manufactured devices that are listed on the Certificate of Compliance indicating HERS verification is required for compliance, the builder shall arrange for the services of a certified HERS Rater prior to installation of the measures so that

once the installation is complete the HERS Rater will have ample time to complete the required field verification and diagnostic testing without delaying final approval of the dwelling unit by the enforcement agency.

For all low-rise residential buildings for which compliance requires HERS field verification and diagnostic testing, the Certificate(s) of Installation shall be signed and submitted to a HERS Provider data registry as specified in Standards Section 10-103(a)3 to certify conformance with Part 6. When Standards Section 10-103(a)3 requires document registration, all Certificates of Installation that are applicable to the dwelling unit shall be registered.

When the installation of a measure is complete, the builder or the builder's subcontractor shall perform all required field verification and diagnostic testing of the installation(s) to confirm compliance with the Standards utilizing the applicable procedures specified in Reference Residential Appendix RA3 or RA1, and submit, or make arrangements for submittal of all required Certificate of Installation information to a HERS Provider data registry. Submittal of Certificate of Installation information to the HERS Provider data registry shall be done electronically.

HERS Raters or other authorized users of the HERS Provider data registry may provide *documentation author* support to facilitate the submittal of the Certificate of Installation information to the HERS Provider data registry on behalf of the builder or the builder's subcontractor when such facilitation has been authorized by the builder or subcontractor. *Documentation authors* shall provide an electronic signature to certify the documentation is accurate and complete. The builder or subcontractor who is eligible under Division 3 of the Business and Professions Code to take responsibility for the construction or installation, or their authorized representative as specified in Standards Section 10-103(a)3A, shall provide an electronic signature to register the Certificate of Installation, to certify the information provided on the Certificate is true and correct, and confirm that the construction or installation complies with the requirements shown on the dwelling unit's Certificate of Compliance that was approved by the enforcement agency. The builder or subcontractor shall make available a copy of the registered Certificate of Installation to the HERS Rater, and post a copy of the registered Certificate of Installation at the building site for review by the enforcement agency in conjunction with requests for final inspection for each dwelling unit. Alternatively, the enforcement agency may elect to view the certificates on an approved Data Registry.

RA2.6 HERS Procedures – Verification, Testing, and Sampling

At the builder's option, HERS field verification and diagnostic testing (HERS verification) shall be completed either for each and every dwelling unit, or alternatively for a dwelling unit sample from a designated group of dwelling units in which the same measure(s) requiring HERS verification is installed in each dwelling unit in the group. If the builder elects to demonstrate compliance utilizing group sampling, all applicable procedures described in Sections RA2.6.2, RA2.6.3, and RA2.6.4 shall be followed.

RA2.6.1 HERS Procedures - General Requirements

The general requirements in RA2.6.1 are applicable to all dwelling units that require HERS verification for compliance, and shall be incorporated into procedures specified in Sections RA2.6.2, RA2.6.3, and RA2.6.4 whenever applicable.

The builder or the builder's authorized representative shall make available to the HERS Rater the names and license numbers of the subcontractors responsible for the installations in the dwelling units that require HERS verification; and a copy of the registered Certificate of Compliance that was signed and submitted by the person responsible for the building design and was approved by the enforcement agency.

The builder, builder's authorized representative, or subcontractor shall make available to the HERS Rater a copy of the applicable registered Certificate(s) of Installation signed and submitted by the builder or subcontractors responsible for the construction or installation as described in Section RA2.5.

Prior to performing field verification and diagnostic testing, the HERS Rater shall verify that registration of all applicable Certificate of Compliance documentation, and registration of all applicable Certificate of Installation documentation has been completed for all dwelling units for which compliance requires HERS verification. The HERS Rater shall confirm the installer's diagnostic test results and all other Certificate of Installation information indicates compliance consistent with the requirements given in the plans and specifications and registered Certificate of Compliance documents approved by the enforcement agency for the dwelling.

The HERS Rater shall perform all applicable field verification and diagnostic testing.

If the HERS Rater's field verification and diagnostic testing determines that the requirements for compliance are met, the HERS Rater shall submit, or make arrangements for submittal of the Certificate of Verification testing information to the HERS Provider data registry.

Authorized users of the HERS Provider data registry that are not certified HERS Raters may provide *documentation author* support to facilitate submittal of the Certificate of Verification information to the HERS Provider data registry on behalf of the HERS Rater when such facilitation has been authorized by the HERS Rater. *Documentation authors* shall provide an electronic signature to certify the documentation is accurate and complete.

The Certificate of Verification shall be signed by the HERS Rater who performed the field verification and diagnostic testing services to certify that the information provided on the Certificate is true and correct.

A completed signed registered copy of the Certificate of Verification shall be posted at the building site for review by the enforcement agency in conjunction with requests for final inspection for each dwelling unit. Alternatively, the enforcement agency may elect to view the certificates on an approved Data Registry.

The HERS Provider shall make document verification services available, to enforcement agencies, builders and contractors, HERS Raters, the Energy Commission, and other authorized users of the HERS Provider data registry.

RA2.6.2 HERS Procedures - Initial Model Field Verification and Diagnostic Testing

The HERS Rater shall diagnostically test and field verify the first dwelling unit of each model within a subdivision or multifamily housing development when the builder elects to demonstrate HERS verification compliance utilizing group sampling. To be considered the same model, dwelling units shall have the same basic floor plan layout, energy design, and compliance features as shown on the Certificate of Compliance. Variations in the basic floor plan layout, energy design, compliance features, zone floor area, or zone volume, that do not change the HERS features to be tested, the heating or cooling capacity of the HVAC unit(s), or the number of HVAC units specified for the dwelling units, shall not cause dwelling units to be considered a different model. For multifamily buildings, variations in exterior surface areas caused by location of dwelling units within the building shall not cause dwelling units to be considered a different model. This initial model testing allows the builder to identify and correct any potential construction flaws or practices in advance of the build out of each model. If field verification and diagnostic testing determines that the requirements for compliance are met, the HERS Rater shall transmit the test results to the HERS Provider data registry, whereupon the Provider shall make available a registered copy of the Certificate of Verification, to the HERS Rater, the builder, the enforcement agency, and other authorized users of the HERS Provider data registry.

RA2.6.3 HERS Procedures – Group Sample Field Verification and Diagnostic Testing

Descriptions for HERS verification compliance using group sampling, and details describing procedures for sampling of a “closed” group of up to seven dwellings, and for sampling of an “open” group of up to five dwellings are described in Section RA2.6.3.

RA2.6.3.1 Designation of Groups

After the initial model field verification and diagnostic testing is completed as specified in RA2.6.2, the builder, or the builder’s authorized representative shall determine a sampling procedure to be used, and shall designate the dwelling units to include in the group of dwellings that require HERS verification. The maximum number of dwelling units allowed in a sample group may range from five, to seven, to thirty as described in Sections RA2.6.3.3, RA2.6.3.4, and RA2.7 respectively.

If multiple measures requiring HERS verification are installed, each dwelling unit in a designated group shall have the same measures requiring HERS verification as the other dwelling units in the designated group. If some dwelling units have installed a different set of measures requiring HERS verification, those dwelling units shall be in a separate group.

If the dwelling units in a designated group have multiple measures that require HERS verification, sample testing for individual measures may be conducted in any of the dwelling units in the group - it is not required that all of the sample tests for all of the individual measures be completed in the same dwelling unit. Individual measures shall be allowed to be included in a group regardless of whether compliance requires one sample test, or if compliance requires more than one sample test (up to100% sample test rate) be reported for such individual measures.

Dwelling units in a designated group shall all be located within the same enforcement agency jurisdiction and subdivision or multifamily housing development. Refer also to Section RA2.8 for requirements for sample groups applicable to alterations.

If dwelling units have central forced-air space conditioning equipment that introduces outside air into the conditioned space utilizing means that connect outside air ventilation ducts directly to the dwelling unit's central forced air duct system (Central Fan-Integrated Ventilation System or CFI Ventilation System), the CFI ventilation technology shall be considered a separate measure for HERS verification sampling purposes, and dwellings with CFI ventilation systems shall be placed in separate groups from other dwelling units that do not utilize CFI ventilation technology.

RA2.6.3.2 Group Status - "Open" Groups and "Closed" Groups

Registration of the first Certificate of Installation, for the first dwelling in a sample group shall be required to "open" a new group. The date of the responsible persons registration signature for the first Certificate of Installation for the group shall establish the start date for the group. Additional dwellings may be entered into the registry, and included in an "open" group over a period of time subject to registration of the Certificate of Installation documents for each additional dwelling. However the group shall not remain "open" to receive additional dwellings for a period longer than six months after the start date of the group. A group may be "closed" at any time after the group has been "opened" at the option of the builder or builder's authorized representative, thus the size of a "closed" group may range from a minimum of one dwelling to a maximum of seven dwellings. When a group becomes classified as "closed", no additional dwellings shall be added to the group.

RA2.6.3.3 Sampling of a "Closed" Group of Up to Seven Dwellings

The following criteria shall be met as prerequisite to attaining HERS verification compliance for the group:

(a) All of the dwelling units contained in the sample group have been identified. A maximum of seven dwellings are allowed to be included in a "closed" sample group for HERS compliance.

(b) Installation of all the measures that require HERS verification has been completed in all the dwellings that are entered in the group, and registration of the Certificates of Installation for all the dwellings entered in the group has been completed.

(c) The group has been classified as a "closed" group in the Provider data registry.

(d) At the request of the builder or the builder's authorized representative, a HERS Rater shall randomly select one dwelling unit from the "closed" sample group for field verification and diagnostic testing. If the dwelling unit meets the compliance requirements, this "tested" dwelling and also each of the other "not-tested" dwellings in the group shall receive a registered Certificate of Verification.

RA2.6.3.4 Sampling of an "Open" Group of Up to Five Dwellings

The following criteria shall be met as prerequisite to attaining HERS verification compliance for the group:

(a) At least one dwelling unit from the sample group has been identified. A maximum of five dwellings are allowed to be included in an "open" sample group for HERS compliance.

(b) Installation of all the measures that require HERS verification shall be completed in all the dwellings that are entered in the group, and registration of the Certificates of Installation for all the dwellings entered in the group has been completed.

(c) At the request of the builder, or the builder's authorized representative, a HERS Rater shall randomly select one dwelling unit from those currently entered into the "open" sample group for field verification and diagnostic testing. If the dwelling unit meets the compliance requirements, the "tested" dwelling and also each of the other "not tested" dwellings currently entered into the group shall receive a registered Certificate of Verification. If less than five dwelling units have been entered into the group, the group shall be allowed to remain "open" and eligible to receive additional dwelling units. Dwelling units entered into the "open" group subsequent to the compliant HERS verification of the "tested" dwelling shall also receive a registered Certificate of Verification as a "not tested" dwelling subject to receipt of the registered Certificate of Installation by the HERS Provider data registry for the dwelling. The group shall be "closed" when it reaches the limit of five dwellings or when the six month limit for "open" groups has been exceeded, or when the builder requests that the group be closed.

RA2.6.3.5 Additional Requirements Applicable to Group Sampling Procedures

The builder or the HERS Rater may request removal of untested dwelling units from a group by notifying the HERS Provider prior to selection of the dwelling sample that will be tested from an "open" or "closed" group and shall provide justification for the change. Removed dwelling units shall be field verified and diagnostically tested individually or shall be included in a subsequent group for sampling.

There are exceptions to the requirement to have completed Certificate of Installation data entered into the HERS Provider data registry prior to selection of the dwelling unit to be tested in a group. Some HERS measures require multiple verifications during the construction process. A sample group is not required to be closed before HERS field verification and diagnostic testing can begin for the following measures. For these measures the HERS Rater is allowed to randomly select the dwelling unit to be field verified from those that are at the proper stage of construction to enable the first of the multiple verifications to be completed.

(a) **Quality Installation of Insulation** measure requires inspection of the air barrier and inspection of the insulation behind tubs and showers at framing rough-in. Verification of the wall, floor and ceiling insulation must be completed prior to drywall installation. Attic insulation installation may require follow-up verification.

(b) **Buried Ducts** measure requires verification of the duct design prior to verification of the attic insulation.

(c) **Duct Surface Area** requires verification of the duct design prior to installation of the attic insulation.

The HERS Rater, with no direction from the installer or builder, shall randomly select one dwelling unit from a "closed" sample group for field verification and diagnostic testing upon receiving the builder's or builder representative's request for HERS verification of that group. Alternatively, the HERS Rater shall randomly select one dwelling unit from the dwellings currently entered into an

"open" sample group upon receiving the builder's or builder representative's request for HERS verification of that group. The HERS Rater shall diagnostically test and field verify the selected dwelling unit. The HERS Rater shall enter the test and/or field verification results into the HERS Provider data registry regardless of whether the results indicate a pass or fail. If the test fails, then the failure must be entered into the Provider's data registry even if the installer immediately corrects the problem. In addition, the procedures in Section RA2.6.4 shall be followed.

If field verification and diagnostic testing determines that the requirements for compliance are met, the HERS Rater shall enter the test results into the HERS Provider data registry. Whereupon the Provider shall make available to the HERS Rater, the builder, the enforcement agency, and other approved users of the HERS Provider data registry, a registered copy of the Certificate of Verification for the "tested" dwelling, and for all other "not tested" dwelling units entered in the group at the time of the sample test. The registered Certificate of Verification shall report the successful diagnostic testing results and conclusions regarding compliance for the tested dwelling unit. The registered Certificate of Verification shall also provide:

(a) Building permit number for the dwelling unit.

(b) Registration Number that conforms to the numbering convention specified in Reference Joint Appendix JA7.

(c) Group Number that conforms to the numbering convention specified in Reference Joint Appendix JA7.

(d) Time and date stamp of the Provider's issuance of the registered Certificate of Verification.

(e) Provider's logo, water mark, or official seal.

(f) Indication that the dwelling was a "tested" dwelling, or was a "not-tested" dwelling in a sample group.

Whenever the builder changes subcontractors who are responsible for a feature that is being diagnostically field verified and tested, the builder shall notify the HERS Rater of the subcontractor change, and terminate sampling for any affected groups. All dwelling units utilizing features that require HERS verification for compliance that were installed by previous subcontractors or were subject to verification and testing under the supervision of a previous HERS Provider, for which the builder does not have a completed Certificate of Verification, shall be individually tested or included in a separate group for sampling. Dwelling units with installations completed by new subcontractors shall be individually tested or shall be included in a new sampling group.

The HERS Rater shall not notify the builder when sample testing will occur prior to the completion of the work that is to be tested, or prior to registration of the Certificate of Installation.

The HERS Provider shall "close" any "open" group within 6 months after the earliest signature date shown on any Certificate of Installation for a dwelling entered in the group. When such group closure occurs, the HERS Provider shall notify the builder that the group has been "closed", and require that a sample dwelling shall be selected for field verification and diagnostic testing by

a HERS Rater if field verification has not yet been conducted on a sample dwelling entered in the group.

RA2.6.4 HERS Procedures - Re-sampling, Full Testing and Corrective Action

"Re-sampling" refers to the procedure that requires testing of additional dwellings within a group when the initial selected sample dwelling from a group fails to comply with the HERS verification requirements.

When a failure is encountered during sample testing, the failure shall be entered into the HERS Provider data registry. Corrective action shall be taken on the failed dwelling unit and the dwelling unit shall be retested to verify that corrective action was successful. Corrective action and retesting on the dwelling unit shall be repeated until the testing indicates compliance and the successful compliance results have been entered into the HERS Provider data registry (or the dwelling unit complies using an alternative method). Whereupon, a registered Certificate of Verification for the dwelling shall be made available to the HERS Rater, the builder, the enforcement agency, and other authorized users of the HERS Provider data registry.

In addition, the HERS Rater shall conduct re-sampling to assess whether the first failure in the group is unique, or if the rest of the dwelling units in the group are likely to have similar failings.

RA2.6.4.1 Re-sampling procedures for a "closed" group of up to seven dwellings:

The HERS Rater shall randomly select for re-sampling one of the remaining untested dwelling units in the group for retesting of the feature that failed. If the failed dwelling was entered in a "closed" group, and the testing of the second randomly selected dwelling unit in the group confirms that the requirements for compliance credit are met on that unit, then the dwelling unit with the initial failure shall not be considered an indication of failure in the remaining untested dwelling units in the group. The HERS Rater shall transmit the re-sample test results to the HERS Provider registry, whereupon the Provider shall make available to the HERS Rater, the builder, the enforcement agency, and other authorized users of the HERS Provider data registry, a registered copy of the Certificate of Verification for the remaining dwelling units in the group including the dwelling unit in the re-sample.

If field verification and diagnostic testing of the second sample results in a failure, the HERS Rater shall report the second failure to the HERS Provider, the builder, and the enforcement agency. All dwelling units in the group must thereafter be individually field verified and diagnostically tested to confirm compliance for the feature that failed to comply with re-sampling. In cases where corrective action would require destruction of building components, the builder may choose to reanalyze compliance and choose different measures that will achieve compliance. In this case a new Certificate of Compliance shall be completed and submitted to the HERS Provider, the HERS Rater, and the enforcement agency. Even with a new Certificate of Compliance, the dwelling unit must be individually field verified and diagnostically tested. Upon verification of compliance, the HERS Rater shall enter the test results into the HERS Provider data registry. Whereupon the Provider shall make available to the HERS Rater, the builder, the enforcement agency, and other authorized users of the HERS Provider data registry, a registered copy of the Certificate of Verification for each individual dwelling in the group.

RA2.6.4.2 Re-sampling procedures for an "open" group of up to five dwellings:

The HERS Rater shall randomly select for re-sampling one of the remaining untested dwelling units in the group for retesting of the feature that failed. If the failed dwelling was entered in an "open" group, and there are no other untested dwellings entered in the "open" group at the time of the failed HERS verification, subsequent dwellings entered into the "open" group shall not receive a Certificate of Verification until a second dwelling in the "open" group is tested and successfully complies. If the subsequent testing of the second dwelling unit in the group confirms that the requirements for compliance credit are met on that unit, then the dwelling unit with the initial failure shall not be considered an indication of failure in the untested dwelling units in the group. The HERS Rater shall transmit the compliant re-sample test results to the HERS Provider data registry, whereupon the Provider shall make available to the HERS Rater, the builder, the enforcement agency, and other authorized users of the HERS Provider data registry, a registered copy of the Certificate of Verification, for the re-sampled dwelling, and the remaining not yet tested dwelling units entered in the "open" group at the time of the re-sample test, and the group shall be allowed to remain open and eligible to receive additional dwelling units. Dwelling units entered into the "open" group of up to 5 dwellings following the successful HERS verification of the re-sampled dwelling shall receive a Certificate of Verification as a "not tested" dwelling subject to registration of the Certificate of Installation by the HERS Provider data registry for the dwelling.

If field verification and diagnostic testing of the second sample results in a failure, the HERS Rater shall report the second failure to the HERS Provider, the builder, and the enforcement agency, and the Provider shall require the "open" group to be "closed". All remaining untested dwelling units entered in the group at the time of the re-sample must thereafter be individually field verified and diagnostically tested. In cases where corrective action would require destruction of building components, the builder may choose to reanalyze compliance and choose different measures that will achieve compliance. In this case, a new Certificate of Compliance shall be completed and submitted to the HERS Provider, the HERS Rater, and the enforcement agency. Even with a new Certificate of Compliance, the dwelling unit must be individually field verified and diagnostically tested. Upon verification of compliance, the HERS Rater shall enter the test results into the HERS Provider data registry. Whereupon the Provider shall make available to the HERS Rater, the builder, the enforcement agency, and other authorized users of the HERS Provider data registry, a registered copy of the Certificate of Verification for each individual dwelling in the group.

RA2.6.4.3 Corrective Action

Builders shall offer to provide the necessary field verification and diagnostic testing services and any necessary corrective action at no charge to building owners (for a definition of "building owner" and of other terms used, see Reference Joint Appendix JA1) in occupied dwelling units in the group. Builders shall report to the HERS Provider the identifying location of any dwelling unit in which the building owner or occupant declines field verification and diagnostic testing and corrective action. The HERS Provider shall verify that the builder has made this offer. If a building owner of a dwelling unit declines this offer, field verification, diagnostic testing, and corrective action will not be required for that dwelling unit and the dwelling unit will no longer be considered a part of the group. If a building owner accepts this offer, the builder shall take

corrective action, and the HERS Rater shall conduct field verification and diagnostic testing to verify that problems have been corrected. Upon verification of compliance, the HERS Rater shall transmit the test results to the HERS Provider data registry. Whereupon the Provider shall make available to the HERS Rater, the builder, the enforcement agency, and other authorized users of the HERS Provider data registry, a registered copy of the Certificate of Verification for the dwelling unit.

The HERS Provider shall file a report with the enforcement agency explaining all actions taken (including field verification, diagnostic testing, corrective action, offers to building owners for testing and corrective action, and/or building owner declines of such offers) to bring into compliance dwelling units for which full testing has been required. If corrective action requires work not specifically exempted by the CMC or the CBC, the builder shall obtain a permit from the enforcement agency prior to commencement of any of the work.

Corrections to avoid reporting a failure to the HERS Provider data registry shall not be made to a sampled dwelling unit after the HERS Rater selects the sample dwelling unit. If it is evident that such corrections have been made to a sampled dwelling unit to avoid reporting a failure, field verification and diagnostic testing shall be required for 100 percent of the dwelling units in the group.

RA2.7 Third Party Quality Control Programs

The Energy Commission may approve Third Party Quality Control Programs (TPQCP) to verify the work of participating installers, collect and evaluate more detailed data than necessary for compliance, identify in real time during the installation invalid and inaccurate installer testing and noncompliant installations, and enable corrected testing with the goal of bringing installations into compliance before the installer leaves the job site. TPQCP personnel and participating TPQCP installation contractors do not have the authority to sign Certificate of Verification documentation as a HERS Rater.

RA2.7.1 Third Party Quality Control Program Responsibilities

An approved Third Party Quality Control Program shall:

a. Provide training to participating program installers (including contractors, subcontractors, and technicians) to ensure proficiency in:
    i. Quality HVAC installation procedures, common causes of failure, and corrections.
    ii. Understanding of the Standards requirements for field verification and diagnostic testing of measures, which are subject to TPQCP program procedures.
    iii. Understanding all applicable specifications for field verification and diagnostic testing procedures specified in the Reference Residential Appendices.
    iv. Any applicable specialized TPQCP-specific procedures.
b. Collect field verification and diagnostic test data (data) from participating installers for each installation completed.

c. Automatically confirm the location of the system undergoing testing using an electronic tracking means such as Global Positioning Satellite (GPS) technology if available.

d. Provide data checking analysis to evaluate the validity and accuracy of the collected data to independently determine whether compliance has been achieved. Data checking based on more detailed data than is required for showing compliance must be able to uncover invalid or erroneous information supplied by installers.

e. Provide direction to the installer to retest and correct problems when data checking determines that compliance has not been achieved. The direction to the installer shall occur in real time so that testing can be redone and corrections can be made before the installer leaves the site.

f. Ensure the installer resubmits updated data from new testing when retesting and correction is completed.

g. Maintain a database of all data submitted by all participating TPQCP installers.

h. Provide functionality that enables Energy Commission staff to query retained TPQCP data or documents.

i. TPQCP shall not impose restrictions on the HERS Rater or the HERS Provider that limit their independence, or the ability of the HERS Rater or the HERS Provider to properly perform their functions.

j. TPQCP shall not impose restrictions on the HERS Rater's use of equipment beyond those required by the Energy Commission.

RA2.7.2 Requirements for Data Collected by a Third Party Quality Control Program

TPQCP data collection shall conform to the following requirements:

a. Data shall be more detailed than the data required for showing compliance with the Standards.

b. Data shall enable the TPQCP to conduct an independent check on the validity and accuracy of the installer's claim that compliance has been achieved.

c. Data shall not be alterable by the installer to indicate that compliance has been achieved when in fact compliance has not been achieved.

RA2.7.3 HERS Provider Responsibilities

HERS Providers shall conform to the following requirements:

a. HERS Providers shall assign a HERS Rater to conduct independent field verification and diagnostic testing of the installation work performed by the participating Third Party Quality Control Program installing contractors, and to submit Certificates of Verification at the close of the sampling group.

b. HERS Providers shall notify enforcement agencies when groups close or exceed six months without closing.

c. HERS Providers shall explain, in their applications for approval by the Energy Commission, the way in which their program will work with TPQCPs.

RA2.7.4 HERS Rater Responsibilities

HERS Raters shall conform to the following requirements:

a. Complete all of the responsibilities of a HERS Rater as specified in Appendix RA2, with the exception that sampling procedures utilized for TPQCP installations shall be limited to sampling of a "closed" group as described in Section RA2.6.3. However, the sample tested shall be selected and field verified from within a group of up to thirty dwelling units.

b. HERS Raters shall be independent entities from the Third Party Quality Control Program.

c. If re-sampling is required, the HERS Rater shall perform full testing and corrective action as specified in Section RA2.6.4 with the exception that re-sampling as defined in RA2.6.4 shall be completed for a minimum of one out of every thirty dwelling units from the group.

RA2.7.5 Conflict of Interest Guidelines

The TPQCP shall meet the requirements imposed on a HERS Rater specified in the Energy Commission's HERS Program regulations (California Code of Regulations, Title 20, Division 2, Chapter 4, Article 8, Sections 1670 -1675), including the requirement to be an independent entity from the builder, the HERS Provider, the HERS Rater that provides independent field verifications, and the subcontractor installer as specified by Section 1673(j). However, a Third Party Quality Control Program may have business relationships with installers participating in the program to advocate or promote the program and an installer's participation in the program, and to advocate or promote products that the Third Party Quality Control Program sells to installers as part of the Program.

RA2.7.6 Conditions of TPQCP Approval

Prior to approval by the Commission, the Third Party Quality Control Program shall provide a detailed explanation to the Commission of the following:

a. The data that is to be collected from the installers.

b. The data checking process that will be used to evaluate the validity and accuracy of the data submitted by the TPQCP installation contractors.

c. The justification for why this data checking process will provide strong assurance that the installation actually complies.

d. The detailed description of the database that will be maintained by the TPQCP, and the functionality that will allow Energy Commission staff to query retained data or documents.

e. A detailed explanation of how their data input complies with Reference Joint Appendix JA7.9.

f. A detailed description of the training that will be provided to TPQCP installers.

g. The procedures the TPQCP will follow to ensure the installer makes appropriate on-site data submittals, installation corrections.

The Third Party Quality Control Program may apply for a confidential designation for information submitted to the Energy Commission as specified in the Commission's Administrative Regulations (California Code of Regulations, Title 20, Division 2, Chapter 7, Article 2, Section 2505).

RA2.7.7 Training for TPQCP Installation Contractors

As a condition to participation in the TPQCP program, all approved TPQCP installing contractors and the TPQCP installing contractor's responsible installation technicians shall be trained and confirmed to be proficient in the following:

1) Quality installation procedures.
2) The requirements of this Appendix RA2.
3) Any applicable specialized TPQCP-specific procedures.

The training requirements also apply to the installing contractor's specialty subcontractors who provide Third Party Quality Control Program services. All installation verification and diagnostic work performed in the program shall be subject to the same quality assurance procedures as required by the Energy Commission's HERS program regulations.

RA2.8 Installer Requirements and HERS Procedures for Alterations

This section on alterations describes the differences that apply to alterations. Otherwise the procedures and requirements detailed in previous sections of Appendix RA2 shall also apply to alterations. For alterations, building owners or their agents may carry out the actions that are assigned to builders in previous sections of Appendix RA2.

Applicable procedures for registration of compliance documents described in Appendix RA2 shall also apply to alterations.

When compliance for an alteration requires field verification and diagnostic testing, the building owner may choose for the field verification and diagnostic testing to be completed for the dwelling unit individually, or alternatively, as part of a designated sample group of dwelling units for which the same installing company has completed work that requires HERS verification for compliance.

When sampling is utilized for HERS verification compliance for alterations, the dwelling units in a designated sample group are not required to be located within the same enforcement agency jurisdiction. However, to enable the enforcement agency to schedule testing to accomplish the corroboration of field verification and diagnostic testing procedures performed by the building owner, subcontractors, or certified HERS Rater as described in Section RA2.4.4, the enforcement agency may require that a separate dwelling unit from the sample group that is located within its jurisdiction be tested.

The building owner or agent of the building owner shall submit, or make arrangements for submittal of the required Certificate of Compliance information to the HERS Provider data registry to complete the applicable Certificate of Compliance documentation in accordance with the requirements in Standards Section 10-103(a)1 and 10-103(a)2.

When the enforcement agency does not require building design plans to be submitted with the application for a building permit for an alteration, the applicable registered Certificate of Compliance documentation specified in 10-103(a)1 is not required to be approved by the enforcement agency prior to issuance of a building permit, but shall be approved by the enforcement agency prior to final inspection of the dwelling unit, and shall be made available to the enforcement agency for all applicable inspections as specified in Standards Section 10-103(a)2A.

HERS Raters or other authorized users of the HERS Provider data registry may provide *documentation author* support to facilitate the submittal of the required Certificate of Compliance information to the HERS Provider data registry on behalf of the building owner or agent of the building owner, when such facilitation has been authorized by the building owner or agent of the building owner. *Documentation authors* shall provide an electronic signature to certify the documentation is accurate and complete. The building owner or agent of the building owner who is eligible under Division 3 of the Business and Professions Code to take responsibility for the design specification for the alteration shall provide an electronic signature to register the Certificate of Compliance, to certify the information provided on the Certificate is true and correct, to certify conformance with Part 6, and shall submit the registered Certificate of Compliance to the enforcement agency for approval.

The building owner or agent shall make available to the HERS Rater a copy of the registered Certificate of Compliance approved by the enforcement agency.

The installer shall perform diagnostic testing and the procedures specified in Section RA2.5.

When the installation is complete, the person responsible for the performance of the installation shall complete the Certificate of Installation in accordance with the procedures specified in Section RA2.5.

The HERS Rater shall perform the applicable verification and diagnostic testing required for compliance following the procedures in Section RA2.6. If group sampling is utilized for compliance, the sampling procedures described in Section RA2.6.3 for sampling of a “closed” group of up to seven dwelling units shall be used, requiring that all dwelling units within the group have been serviced by the same installing company. The installing company may request a group for sampling that is smaller than seven dwelling units. Whenever a HERS Rater for the group is changed, a new group shall be established.

Re-sampling, full testing, and corrective action shall be completed, if necessary, as specified by Section RA2.6.4.

The enforcement agency shall not approve the alteration until the enforcement agency has received a completed Certificate of Installation as specified in Section RA2.5, and a completed Certificate of Verification as specified in Section RA2.6.

Third Party Quality Control Programs, as specified in Section RA2.7, may also be used with alterations, and shall be limited to “closed” sample group sizes of thirty dwelling units or less.

When a Third Party Quality Control Program is used, the enforcement agency may approve compliance based on the Certificate of Installation prior to registration of the Certificate of Verification where data checking has indicated that the unit complies, on the condition that a

Certificate of Verification will be submitted. If the required HERS verification procedures determine that re-sampling, full testing, or corrective action is necessary, such work shall be completed.

(This page intentionally left blank.)

Residential Appendix RA3

Appendix RA3 – Residential HERS Field Verification and Diagnostic Test Protocols

RA3.1 Field Verification and Diagnostic Testing of Air Distribution Systems

RA3.1.1 Purpose and Scope

RA3.1 contains procedures for measuring the air leakage in forced air distribution systems as well as procedures for verifying duct location, duct surface area, duct R-value, return duct design, return grille design, and air filter installation.

RA3.1 applies to air distribution systems in both new and existing low-rise residential buildings.

RA3.1 provides required procedures for installers, HERS raters and others who are required to perform field verification of air distribution systems.

Table RA3.1-1 is a summary of the tests and criteria included in RA3.1.

Table RA3.1-2 Provides compliance criteria for the duct leakage test protocols in Section RA3.1.4.3.

Table RA3.1-1 – Summary of Duct System Field Verification and Diagnostic Test Protocols

Verification/Diagnostic	Description	Procedure
Duct Location, Surface Area and R-value	Verify duct system was installed according to the specifications on the Certificate of Compliance or in accordance with an approved duct system design layout.	RA3.1.4.1
Verified Duct System Design	Procedure for duct system design layout approval and field verification	RA3.1.4.1.1
Duct Leakage	Verify that duct leakage is less than or equal to the compliance criteria given in Table RA3.1-2.	RA3.1.4.3
Return Duct Design	Verify compliance with the return duct and return grill sizing requirements of Table 150.0-B or Table 150.0-C).	RA3.1.4.4
Air Filter Device Design	Verify compliance with the requirements in 150(m)12.	RA3.1.4.5
Verification of Prescriptive Bypass Duct Requirements	Verification to confirm zonally controlled systems comply with the bypass duct requirements in 150.1(c)13	RA3.1.4.6
Verification of Space-Conditioning System Airflow Supply to All Habitable Spaces	Verify that all habitable spaces in the dwelling unit receive space-conditioning system airflow.	RA3.1.4.1.7
Verification of Ductless Space-Conditioning System Indoor Units Located Entirely in Conditioned Space	Verify that ductless indoor units are located entirely in conditioned space.	RA3.1.4.1.8

RA3.1.2 Instrumentation Specifications

The instrumentation for the air distribution diagnostic measurements shall conform to the following specifications:

RA3.1.2.1 Pressure Measurements

All pressure measurements shall be measured with measurement systems (i.e. sensor plus data acquisition system) having an accuracy equal to or better than ± 1% of pressure reading or ± 0.2 Pa. (0.0008 inches water) (whichever is greater). All pressure measurements within the duct system shall be made with static pressure probes such as Dwyer A303 or equivalent.

RA3.1.2.2 Duct Leakage Measurements

Duct leakage airflow rates during duct leakage testing shall be measured with a duct leakage airflow rate measurement apparatus that has a duct leakage airflow rate measurement accuracy equal to or better than ± 3 percent of reading or ± 1 cfm (whichever is greater).

RA3.1.2.3 Calibration

All instrumentation used for duct leakage diagnostic measurements shall be calibrated according to the manufacturer's calibration procedure to conform to the accuracy requirement specified in Section RA3.1.2.

RA3.1.3 Diagnostic Apparatus

RA3.1.3.1 Apparatus for Duct Pressurization and Leakage Flow Measurement

The apparatus for fan pressurization duct leakage measurements shall consist of a duct pressurization and flow measurement device meeting the specifications in Section RA3.1.2.

RA3.1.3.2 Apparatus for Duct Leakage to Outside Measurement

The apparatus for measuring duct leakage to outside shall include a fan that is capable of maintaining the pressure within the conditioned spaces in the house at 25 Pa (0.1 inches water) relative to the outdoors. The fan most commonly used for this purpose is known as a "blower door" and is typically installed within a temporary seal of an open exterior doorway.

RA3.1.3.3 Apparatus for Smoke-Test of Accessible-Duct Sealing (Existing Duct Systems)

The apparatus for determining leakage in and verifying sealing of all accessible leaks in existing duct systems provide means for introducing controllable amounts of non-toxic visual/theatrical smoke into the duct pressurization apparatus for identifying leaks in accessible portions of the duct system. The means for generating smoke shall have sufficient capacity to ensure that any accessible leaks will emit visibly identifiable smoke.

RA3.1.4 Verification and Diagnostic Procedures

This section describes the procedures used to verify compliance with the mandatory and performance compliance requirements for air distribution systems.

RA3.1.4.1 Diagnostic Duct Location, Surface Area and R-value

The performance compliance calculations allow credit for duct systems that are designed to be in advantageous locations, that have reduced duct surface areas, and/or that provide higher R-values or portions of the system. This section specifies procedures for verification of duct systems

for conformance with the requirements for the performance compliance credits. When indicated on the Certificate of Compliance, the Installer shall certify compliance with the applicable procedures in RA3.1.4.1 on a Certificate of Installation, and a HERS rater shall verify compliance on a Certificate of Verification.

RA3.1.4.1.1 *Verified Duct System Design*

An installed duct system meets the Verified Duct System Design compliance criteria if it is field verified by a HERS rater to be in conformance with a duct design layout that meets all applicable duct design and documentation requirements given in Section RA3.1.4.1.1. The duct design layout shall be approved by the enforcement agency.

RA3.1.4.1.1.1 *Verified Duct System Design - Duct Design Layout*

The duct system design shall be documented on the Duct Design Layout, a scaled layout drawing that identifies the location of the space conditioning equipment, all supply and return registers/grilles, the size, R-value, and location of each duct segment. The Duct Design Layout shall incorporate all other duct details reported on the registered Certificate of Compliance.

RA3.1.4.1.1.2 *Verified Duct System Design - Compliance Criteria*

The duct system design shall be based on an industry standard design methodology such as ACCA Manual D or an equivalent, and shall take into account: the available external static pressure from the air handler, the equivalent length or pressure drop of external devices, and the pressure drop of the duct runs accounting for size, type and configuration of the ducts and fittings. The duct system shall be designed to meet the required system airflow rate with the manufacturer-specified available external static pressure for the specified system air handler at that airflow. The duct system design shall include calculations that indicate the duct system will operate at equal to or greater than 0.0292 cfm/Btu (350 cfm/12000 Btu) in cooling speed (350 cfm per nominal ton of condensing unit cooling capacity specified by the manufacturer) or, if heating only, equal to or greater than 16.8 cfm per 1000 Btu/hr furnace nominal output specified by the manufacturer.

RA3.1.4.1.1.3 *Verified Duct System Design - Duct Design Layout Approval*

The Duct Design Layout shall be included with the building design plans and the registered Certificate of Compliance submitted to the enforcement agency in conjunction with the application for the building permit. A copy of the Duct Design Layout approved by the enforcement agency shall be posted or made available with the building permit(s) issued for the building, and shall be made available to the enforcement agency, installing contractor, and HERS rater for use during the installation work and for all applicable inspections.

RA3.1.4.1.1.4 *Verified Duct System Design - Field Verification of Installation*

The location of all supply and return registers shall be verified by inspection of the interior of the dwelling unit. The location of the space conditioning equipment and the size, R-value, and location of each duct segment shall be verified by observation in the spaces where they are located. Deviations from the approved Duct Design Layout shall not be allowed without a revised a Duct Design Layout approved by the enforcement agency.

RA3.1.4.1.2 Verification of 12 Linear Feet or Less of Duct Located Outside Of Conditioned Space

A visual inspection shall confirm space conditioning systems with air handlers located outside the conditioned space have 12 linear feet or less of duct located outside the conditioned space including air handler and plenum. If the space conditioning system has more than 12 feet of duct outside of conditioned space, the system does not pass.

RA3.1.4.1.3 Visual Verification of Ducts Located Entirely In Conditioned Space

A visual inspection shall confirm space conditioning duct systems are located entirely in conditioned space. If any part of the space conditioning duct system is outside of conditioned space, the system does not pass.

RA3.1.4.1.4 Verification of Duct Surface Area Reduction

Compliance with Verified Duct System Design procedures specified in RA3.1.4.1.1 are prerequisite for compliance with the Duct Surface Area Reduction compliance credit. A visual inspection shall on confirm the installed duct system layout conforms to the Duct Design Layout.

RA3.1.4.1.5 Verification of Buried Ducts on The Ceiling R-Value

Compliance with Verified Duct System Design procedures specified in RA3.1.4.1.1 is prerequisite for compliance with the Buried Ducts on the Ceiling compliance credit. A visual inspection shall confirm the installed duct system layout conforms to the Duct Design Layout. This procedure shall be carried out prior to covering the ducts with insulation.

Ducts designed to be buried shall be insulated to R4.2 or greater. In addition, ducts designed to be in contact with the ceiling shall be not more than 3.5 inches from the ceiling drywall. A sign shall be hung near the attic access that displays a warning: “Caution: Buried Ducts. Markers indicate location of buried ducts.” All ducts that will be completely buried shall have vertical markers that are visible after insulation installation, placed at least every 8 feet of duct length and at the beginning and end of each duct run.

RA3.1.4.1.6 Verification of Deeply Buried Ducts R-Value

Compliance with Verified Duct System Design procedures specified in RA3.1.4.1.1 is prerequisite for compliance with the Deeply Buried Ducts compliance credit. A visual inspection shall confirm the installed duct system layout conforms to the Duct Design Layout. This procedure shall be carried out prior to covering the ducts with insulation.

Ducts designed to be buried shall be insulated to R4.2 or greater. In addition, ducts designed to be in contact with the ceiling shall be not more than 3.5 inches from the ceiling drywall. A sign shall be hung near the attic access that displays a warning: “Caution: Buried Ducts. Markers indicate location of buried ducts.” All ducts that will be completely buried shall have vertical markers that are visible after insulation installation, placed at least every 8 feet of duct length and at the beginning and end of each duct run.

RA3.1.4.1.7 Verification of Space-Conditioning System Airflow Supply to All Habitable Spaces

A visual inspection shall confirm that all habitable spaces in the dwelling unit receive space-conditioning system airflow either by use of a ductless space-conditioning system indoor unit located on the wall, ceiling, or floor of the habitable space, or by use of space-conditioning system air supply registers located in the habitable space that use ductwork connected from the register directly to the supply air outlet of a ducted space-conditioning system air handling unit. Refer to Standards Section 100.1 for the definition of habitable space. Transfer fans that move air from one space in the dwelling to a different space in the dwelling, but do not heat or cool the air transferred, do not meet the requirement for providing space-conditioning system airflow.

RA3.1.4.1.8 Verification of Ductless Space-Conditioning System Indoor Units Located Entirely in Conditioned Space

A visual inspection shall confirm that ductless indoor units are located entirely in conditioned space in accordance with the following requirements:

(a) Ductless indoor unit types that mount entirely on the interior surface of dwelling unit walls, ceilings, or floors shall be considered to be entirely in conditioned space. Penetrations in the wall, ceiling or floor surface necessary for the indoor unit refrigerant piping, condensate drain, or electrical connections shall be allowed, provided the penetrations are sealed.

(b) Ductless indoor units that penetrate the interior surface of dwelling unit walls, ceilings, or floors, and protrude through cut-out openings in the dwelling unit walls, ceilings, or floors shall be inspected to determine whether the indoor unit is installed inside both the thermal boundary and the air barrier of the dwelling according to the following criteria as applicable:

   i. Ductless indoor units that protrude through the air barrier into unconditioned spaces (including but not limited to attics, crawl spaces, garages, or outdoors) are not located entirely in conditioned space.

   ii. Ductless indoor units that protrude into indirectly conditioned spaces (including but not limited to drop ceilings, or floor assemblies in a single family or multifamily multi-story building) that are wholly inside both the thermal boundary and the air barrier of the dwelling are located entirely in conditioned space. Note: Verification at an early stage of building construction may be necessary for visual verification to be possible.

If field verification according to RA3.1.4.1.8 determines the installed system's ductless indoor units are not located entirely in conditioned space, then the system does not comply with the VCHP compliance option eligibility requirements.

RA3.1.4.2 Determining Air Handler Airflow for Calculation of Duct Leakage Rate Compliance Targets

For use in establishing the target duct leakage rate compliance criteria, the system air handler airflow shall be calculated using RA3.1.4.2.1, RA3.1.4.2.2, or RA3.1.4.2.3 as applicable.

RA3.1.4.2.1 Default Air Handler Airflow

Default air handler airflow may be used for any one of the following conditions:

(a) for heating-only systems, or

(b) when a duct system is being tested prior to installation of the air conditioning or heating system equipment, or

(c) when the space conditioning system equipment specification is not known.

Default air handler airflow shall be a calculated value equal to 0.5 CFM per ft^2 of Conditioned Floor Area.

RA3.1.4.2.2 Nominal Air Handler Airflow

Nominal air handler airflow shall be calculated according to one of the following methods as applicable:

(a) For heating-only systems, the nominal air handler airflow shall be 21.7 CFM per kBtu/hr of rated heating output capacity.

(b) For split or packaged cooling systems with only one indoor unit, the nominal air handler airflow shall be 400 CFM per nominal ton of outdoor condensing unit cooling capacity as specified by the manufacturer.

(c) For small duct high velocity systems, the nominal air handler airflow shall be 250 CFM per nominal ton of outdoor condensing unit cooling capacity as specified by the manufacturer.

(d) For multiple-split systems that provide cooling, the nominal air handler airflow for each indoor unit shall be 350 CFM per nominal ton of indoor unit cooling capacity as specified by the manufacturer.

RA3.1.4.2.3 Measured System Airflow

The system airflow shall be as measured according to a procedure in Section RA3.3.3. The system airflow can be used as the air handler airflow for the purpose of establishing duct leakage percentage.

RA3.1.4.3 Diagnostic Duct Leakage

Diagnostic duct leakage measurement is used by installers and raters to verify that total leakage meets the criteria for any sealed duct system specified in the compliance documents.

When central fan integrated (CFI) indoor air quality ventilation system air ducts, or central fan ventilation cooling system (CFVCS) air ducts connect to space conditioning system ducts, the ventilation duct branch openings shall not be sealed/taped off during space conditioning system

duct leakage testing. However, the ventilation system motorized dampers that open only when ventilation airflow is required and close when ventilation airflow is not required may be closed during space conditioning system duct leakage testing.

Table RA3.1-2 summarizes the leakage test procedures that may be used to demonstrate compliance.

Table RA3.1-2 – Duct Leakage Verification and Diagnostic Test Protocols

Verification Description	User Application	Procedure(s)
Sealed and tested new duct systems in single family homes and townhomes	Installer Testing at Final HERS Rater Testing	RA3.1.4.3.1
Sealed and tested new duct systems in single family homes and townhomes	Installer Testing at Rough-in, Air Handling Unit Installed	RA3.1.4.3.2 RA3.1.4.3.2.1 RA3.1.4.3.3
Sealed and tested new duct systems in single family homes and townhomes	Installer Testing at Rough-in, Air Handling Unit Not Installed	RA3.1.4.3.2 RA3.1.4.3.2.2 RA3.1.4.3.3
Sealed and tested new duct systems in multifamily homes regardless of duct system location.	Installer Testing at Final HERS Rater Testing	RA3.1.4.3.1
Sealed and tested new duct systems in multifamily homes regardless of duct system location.	Installer Testing at Final HERS Rater Testing	RA3.1.4.3.4
Verification of Low Leakage Air Handler with Sealed and Tested Duct System Compliance Credit	Installer Testing at Final HERS Rater Testing	RA3.1.4.3.1 and RA3.1.4.3.9
Verification of low leakage ducts located entirely in conditioned space	Installer Testing HERS Rater Testing	RA3.1.4.3.8
Sealed and tested altered existing duct systems	Installer Testing HERS Rater Testing	RA3.1.4.3.1
Sealed and tested altered existing duct systems	Installer Testing HERS Rater Testing	RA3.1.4.3.4
Sealed and tested altered existing duct systems	Installer Testing and Inspection HERS Rater Testing and Verification	RA3.1.4.3.5 RA3.1.4.3.6 RA3.1.4.3.7

RA3.1.4.3.1 Diagnostic Duct Leakage from Fan Pressurization of Ducts

The objective of this procedure is for an installer to determine or a rater to verify the total leakage of a new or altered duct system. The total duct leakage shall be determined by pressurizing the entire duct system to a positive pressure of 25 Pa (0.1 inches water) with respect to outside. The following procedure shall be used for the fan pressurization tests:

(a) Verify that the air handler, supply and return plenums and all the connectors, transition pieces, duct boots and registers are installed and sealed. The entire duct system shall be included in the total leakage test.

(b) For newly installed or altered ducts, verify that cloth backed rubber adhesive duct tape has not been used and if a platform or other building cavity used to house the air distribution system has been newly installed or altered, it contains a duct or is ducted with duct board or sheet metal.

(c) Seal all the supply registers and return grilles except for one large centrally located return grille or the air handler cabinet access panel. Floor registers on carpeted floors may be removed and the opening sealed to the floor under the carpet. If allowed by the

equipment manufacturer, the air-handling unit blower compartment access panel may be sealed with an approved tape - do not use mastic or other permanent sealing material.

(d) Attach the fan flowmeter device to the duct system at the unsealed return grille or the air handler cabinet access panel. Ensure that the air filter has been removed.

(e) Install a static pressure probe at a supply register located close to the air handler, or at the supply plenum.

(f) Adjust the fan flowmeter to produce a positive 25 Pa (0.1 inches water) pressure at the supply register or the supply plenum with respect to the outside or with respect to the building space with the entry door open to the outside.

(g) Record the flow through the flowmeter; this is the leakage flow at 25 Pa (0.1 inches water).

(h) Divide the leakage flow by the total air handler airflow determined by the procedure in Section RA3.1.4.2 and convert to a percentage. If the leakage flow percentage is equal to or less than the compliance criterion required by the Standards, the system passes.

RA3.1.4.3.2 Diagnostic Duct Leakage at Rough-in Construction Stage

Installers may determine duct leakage in newly constructed buildings by using diagnostic measurements at the rough-in building construction stage prior to installation of the interior finishing. When using this measurement technique, the installer shall complete additional inspection (as described in section RA3.1.4.3.3) of duct integrity after the finishing wall has been installed. In addition, after the finishing wall is installed, spaces between the register boots and the wallboard shall be sealed. Cloth backed rubber adhesive duct tapes shall not be used to seal the space between the register boot and the wall board.

The duct leakage measurement at rough-in construction stage shall be performed using a fan pressurization device. The duct leakage shall be determined by pressurizing both the supply and return ducts to 25 Pa (0.1 inches water). The following procedure (either RA3.1.4.3.2.1 or RA3.1.4.3.2.2) shall be used:

RA3.1.4.3.2.1 *Ducts with the Air Handling Unit Installed and Connected:*

For total leakage:

(a) Verify that supply and return plenums and all the collars, connectors, transition pieces, duct boots, and return boxes have been installed. If a platform or other building cavity is used to house portions of the air distribution system, it shall contain a duct, be lined with duct board or sheet metal, and all duct connectors and transition parts shall be installed and sealed. The platform, ducts, and connectors shall be included in the total leakage test. All joints shall be inspected to ensure that no cloth backed rubber adhesive duct tape is used.

(b) Seal all the supply duct boots and return boxes except for one return duct box.

(c) Attach the fan flowmeter device at the unsealed return duct box.

(d) Insert a static pressure probe at one of the sealed supply duct boots located close to the supply plenum or at the supply plenum.

(e) Adjust the fan flowmeter to maintain a positive 25 Pa (0.1 inches water) pressure in the duct system with respect to the outside, or with respect to the building space with the entry door open to the outside.

(f) Record the flow through the flowmeter; this is the leakage flow at 25 Pa (0.1 inches water).

(g) Divide the leakage flow by the total air handler airflow determined by the procedure in Section RA3.1.4.2 and convert to a percentage. If the leakage flow percentage is less than or equal to the compliance criterion required by the Standards, the system passes.

RA3.1.4.3.2.2 ***Ducts with Air Handling Unit Not Yet Installed:***

For total leakage:

(a) Verify that supply and return plenums and all the collars, connectors, transition pieces, duct boots, and return boxes have been installed. If a platform or other building cavity is used to house portions of the air distribution system, it shall contain a duct, be lined with duct board or sheet metal, and all duct connectors and transition parts shall be installed and sealed. The platform, ducts and connectors shall be included in the total leakage test. All joints shall be inspected to ensure that no cloth backed rubber adhesive duct tape is used.

(b) Supply and return leaks may be tested separately, or the supply and return plenums may be connected together using suitable temporary air-tight means to facilitate testing the total system. If the supply and return systems are to be tested separately, the opening to the supply or return plenums shall be sealed to prevent leakage unless used as the point of attachment for the fan flowmeter.

(c) Seal all the supply duct boots and/or return duct boxes except for a location where the fan flowmeter device will be attached.

(d) Attach the fan flowmeter device at the unsealed location.

(e) Insert a static pressure probe at one of the sealed supply duct boots, or return duct boxes, located at a point in the system close to the fan flowmeter.

(f) Adjust the fan flowmeter to produce a positive 25 Pa (0.1 inches water) pressure at the supply plenum with respect to the outside or with respect to the building space with the entry door open to the outside.

(g) Record the airflow through the flowmeter; this is the leakage flow at 25 Pa (0.1 inches water).

(h) If the supply and return ducts are tested separately, repeat items 4 through 6 with the flow meter attached to the unsealed return box and the static pressure probe in the return duct boxes, located at a point in the system close to the fan flowmeter, then add the two leakage rates together to get a total leakage flow.

(i) Divide the leakage flow by the total air handler airflow determined by the procedure in Section RA3.1.4.2 and convert to a percentage. If the leakage flow percentage is less than or equal to the compliance criterion required by the Standards, the system passes.

RA3.1.4.3.3 Installer Visual Inspection at Final Construction Stage

After installing the interior finishing drywall, or other finishing material, and verifying that one of the above rough-in tests was completed, the following procedure shall be used:

(a) Remove at least one supply and one return register, and verify that the spaces between the register boot and the interior finishing wall are properly sealed.

(b) If the house rough-in duct leakage test was conducted without an air handler installed, inspect the connection points between the air handler and the supply and return plenums to verify that the connection points are properly sealed.

(c) Inspect all joints to ensure that no cloth backed rubber adhesive duct tape is used.

RA3.1.4.3.4 Duct Leakage to Outside from Fan Pressurization of Ducts

The objective of this test is to determine the amount of duct leakage to outside the air barrier for the conditioned space. This measurement is utilized to verify that duct systems are located entirely within conditioned space. The procedure is also utilized to provide an alternate leakage measurement for situations when it is likely that a portion of the total duct leakage is inside the air barrier for the conditioned space. The duct leakage to outside shall be determined by pressurizing the ducts and the conditioned space of the house to 25 Pa (0.1 inches water) with respect to outside. The following procedure shall be used for the fan pressurization test of leakage to outside:

(a) Seal all the supply registers and return grilles except for one large centrally located return grille or the air handler cabinet access panel.

(b) Attach the fan flowmeter device to the duct system at the unsealed return grille or the air handler cabinet access panel.

(c) Install a static pressure probe at the supply plenum.

(d) Attach a blower door to an external doorway. If the door between the dwelling and the garage is used, the garage car-bay doors must be open.

(e) If any ducts are located in an unconditioned basement, all doors or accesses between the conditioned space and the basement shall be closed, and at least one operable door or window (if it exists) between the basement and outside shall be open during the test.

(f) If the ducts are located in a conditioned basement, any door between the basement and the remaining conditioned space shall be open, and any basement doors or windows to outside must be closed during the test.

(g) Adjust the blower door fan to provide positive 25 Pa (0.1 inches of water) pressure in the conditioned space with respect to outside.

(h) Adjust the fan/flowmeter to maintain a zero pressure difference (plus or minus 0.5Pa (.002 inches water)) between the ducts and the conditioned space, and adjust the blower

door fan to maintain a positive 25 Pa (0.1 inches of water) pressure in the conditioned space with respect to outside. This step may require several iterations.

(i) Record the flow through the flowmeter; this is the duct leakage flow to outside at 25 Pa (0.1 inches water). If the leakage flow is less than or equal to the applicable compliance criteria required by the Standards, the system passes.

(j) If required for compliance, divide the leakage flow by the system air handler airflow determined by the procedure in Section RA3.1.4.2, and convert to a percentage. If the leakage flow percentage is less than or equal to the criterion required by the Standards, the system passes.

RA3.1.4.3.5 Sealing of All Accessible Leaks

For altered existing duct systems that are unable to pass either the Fan Pressurization of Ducts test (RA3.1.4.3.1), or the Duct Leakage to Outside test (RA3.1.4.3.4)), the objective of this test is to verify that all accessible leaks are sealed. The following procedure shall be used:

(a) Complete the leakage test specified in Section RA3.1.4.3.1 to measure the leakage before commencing duct sealing.

(b) Seal all accessible ducts.

(c) After sealing is complete, again use the procedure in RA3.1.4.3.1 to measure the leakage after duct sealing.

(d) Complete the Smoke Test as specified in RA3.1.4.3.6.

(e) Complete the Visual Inspection as specified in RA3.1.4.3.7.

RA3.1.4.3.6 Smoke-Test of Accessible-Duct Sealing

For altered existing ducts that fail the leakage tests, the objective of the smoke test is to confirm that all accessible leaks have been sealed. The following procedure shall be used:

(a) Inject either theatrical or other non-toxic smoke into a fan pressurization device that is maintaining a duct pressure difference of 25 Pa (0.1 inches water) relative to the duct surroundings, with all grilles and registers in the duct system sealed.

(b) Visually inspect all accessible portions of the duct system during smoke injection.

(c) The system shall pass the test if one of the following conditions is met:

1. No visible smoke exits the accessible portions of the duct system.
2. Smoke only emanates from the furnace cabinet which is gasketed and sealed by the manufacturer and no visible smoke exits from the accessible portions of the duct system.

RA3.1.4.3.7 Visual Inspection of Accessible Duct Sealing

The objective of this inspection in conjunction with the smoke test (RA3.1.4.3.6) is to confirm that all accessible leaks have been sealed. Visually inspect to verify that the following locations have been sealed:

(a) Connections to plenums, evaporator coils, and other connections to the forced air unit.

(b) Refrigerant lines, p-traps and other penetrations into the forced air unit.

(c) Air handler door panel (do not use permanent sealing material, metal tape is acceptable).

(d) Register boots sealed to surrounding material at all registers and grilles.

(e) Connections between lengths of duct, as well as connections to takeoffs, wyes, tees, and splitter boxes.

RA3.1.4.3.8 Verification of Low Leakage Ducts Located Entirely In Conditioned Space

A visual inspection shall confirm the duct system location as specified by Section RA3.1.4.1.3. Additionally, ducts shall be confirmed to have less than or equal to 25 cfm leakage to outside when measured as specified by Section RA3.1.4.3.4.

RA3.1.4.3.9 Verification of Low Leakage Air-Handling Unit with Sealed and Tested Duct System

An additional performance compliance credit is available for verified low leakage ducts if a qualified low leakage air-handling unit is installed. The low leakage air-handling unit cabinet (furnace, or heat pump fan and inside coil) shall conform to the qualification requirements given in Reference Joint Appendix JA9, and shall be included in the list of low leakage air handling units published by the Energy Commission. The qualified air handler must be connected to a sealed and tested new duct system to receive the credit.

In order to comply with this credit, the duct system shall be verified to leak less than or equal to the leakage rate specified on the Certificate of Compliance using the methods in Section RA3.1.4.3.1, and the air handler manufacturer make and model number shall be verified to be a model certified to the Energy Commission as qualified for credit as a low leakage air handler.

RA3.1.4.4 Verification of Return Duct Design

Verification shall consist of a visual inspection to confirm that the duct design conforms to the criteria given in Table 150.0-B or Table 150.0-C.

RA3.1.4.5 Verification of Air Filter Device Design

Verification shall consist of a visual inspection to confirm that the air filter devices conform to the requirements given in Section 150.0(m)12.

RA3.1.4.6 Verification of Bypass Ducts for Zonally Controlled Forced Air Systems

When a zonally controlled forced air system is installed, a visual inspection shall confirm:

(a) That bypass ducts are not used to deliver conditioned supply air directly to the space conditioning system return duct airflow; or

(b) That the Certificate of Compliance indicates an allowance for use of bypass ducts.

RA3.1.4.7 Verification of Air Filter Sizing According to Face Velocity Specification

When compliance requires verification that a ducted system's indoor unit air filters have been sized in accordance with a maximum face velocity specification, the following procedure shall be used.

(a) **Indoor unit design airflow rate.** Record the design airflow rate for the indoor unit in CFM as specified by the system designer. The design airflow rate shall be equal to or greater than the minimum airflow rate required for compliance with the standards. Alternatively, if the design airflow rate for the indoor unit is not available, calculate and record the nominal air handler airflow rate for the indoor unit in accordance with the specifications in RA3.1.4.2.2.

(b) **Air filter design airflow rate**. Determine the air filter design airflow rate. For indoor units with only one filtered return air inlet, the air filter design airflow rate in CFM is equal to the indoor unit design airflow rate determined in step (a). For indoor units with more than one filtered return air inlet, the system designer shall determine what portion of the total indoor unit airflow is equal to the air filter design airflow for each air filter, ensuring that the sum total of all individual air filter design airflow rates is equal to the total indoor unit design airflow rate determined in step (a).

(c) **Air filter grille/rack sticker**. Compare the air filter design airflow rate calculated in step (b) to the design airflow rate on the filter grille or rack. Standards Section 150.0(m)12Biv requires that air filter installation locations shall have the air filter design airflow rate, and maximum allowable clean-filter pressure drop at the design airflow rate posted on a label/sticker, inside or near the location of the filter grille/rack such that this information will be visible to a person replacing the air filter.

    If the air filter installation location does not have the required information marked on a label or sticker, the indoor unit does not comply.

(d) **Air filter maximum face velocity allowed**. Record the maximum allowable face velocity value in ft/min required for compliance for each air filter.

(e) **Minimum air filter face area allowed**. For each air filter, divide the air filter design airflow rate in ft3/min by the maximum allowable face velocity in ft/min. The result is the minimum allowable total air filter face area in ft2 for the air filter. Convert the calculated face area from square feet to square inches by multiplying the face area in square feet by 144.

    Note: the air filter face area is the nominal area of the side of the air filter that is perpendicular to the direction of the airflow through the air filter.

(f) **Installed air filter nominal dimensions**. Measure and record the installed nominal length dimension in inches and nominal width dimension in inches for the side of the filter that is perpendicular to the direction of the airflow through the air filter installed in the return air grille/rack of the indoor unit. If there is more than one filtered return air inlet for the indoor unit, measure and record the length dimension and width dimension of each of the air filters.

(g) **Installed air filter face area**. For each of the filtered return air inlets for the indoor unit, multiply the nominal air filter length dimension by the nominal air filter width dimension to calculate the nominal air filter face area in square inches.

(h) **Determining compliance**. For each of the filtered return air inlets for the indoor unit, if the installed air filter face area is greater than or equal to the minimum air filter face area allowed as determined in step (e), then the air filter complies. All of the indoor unit air filters that are required be sized and verified according to a face velocity specification shall comply, otherwise the indoor unit does not comply.

RA3.1.4.8 Verification of Air Filter Pressure Drop Rating

When compliance requires field verification to confirm that a ducted system's indoor unit air filter(s) comply with a minimum clean filter pressure drop requirement, the following steps shall be followed. When there is more than one filtered return air inlet for the indoor unit, all of the indoor unit's air filter devices shall be field verified.

(a) **Indoor unit design airflow rate**. Record the design airflow rate for the indoor unit in CFM as specified by the system designer. The design airflow rate shall be equal to or greater than the minimum airflow rate required for compliance with the standards. Alternatively, if the design airflow rate for the indoor unit is not available, calculate and record the nominal air handler airflow rate for the indoor unit in accordance with the specifications in RA3.1.4.2.2.

(b) **Air filter design airflow rate**. For indoor units with only one filtered return air inlet, the air filter design airflow rate in CFM is equal to the indoor unit design airflow rate determined in step (a). For indoor units with more than one filtered return air inlet, the system designer shall determine what portion of the total indoor unit airflow is equal to the air filter design airflow for each air filter, ensuring that the sum total of all individual air filter design airflow rates is equal to the total indoor unit design airflow rate determined in step (a).

(c) **Air filter grille/rack sticker.** Standards Section 150.0(m)12Biv requires that air filter installation locations shall have the air filter design airflow rate, and maximum allowable clean-filter pressure drop at the design airflow rate posted on a label/sticker, inside or near the location of the filter grille/rack such that this information will be visible to a person replacing the air filter.

Field inspection shall verify that each air filter installation location has the required sticker. If the air filter installation location does not have the required sticker, the indoor unit does not comply.

(d) **Air filter manufacturer's performance rating label**. Standards section 150.0(m)12E requires that the air filter placed in the filter grille/rack shall be labeled by the air filter manufacturer to disclose the clean filter pressure drop performance determined according to ASHRAE Standard 52.2 or AHRI Standard 680. The required air filter label information includes clean filter pressure drop ratings at a range of airflow rates.

Field inspection shall verify that the air filter installed in the filter grille/rack has the required performance rating label. If an installed air filter does not have the required manufacturer's performance rating label, then the indoor unit does not comply.

(e) **Determining clean filter pressure drop compliance**. Inspection of the air filter manufacturer's performance rating label shall verify that the air filter is rated to provide a clean filter pressure drop less than or equal to the value required for compliance, at an airflow rate greater than or equal to the design airflow for the filter. Interpolation of the manufacturer's airflow and pressure drop rating values published on the air filter performance rating label is allowed when determining compliance. Field diagnostic pressure measurements of operating indoor units to determine the pressure drop of installed air filters are not required for demonstrating compliance.

If all of the indoor unit air filters are rated to operate at a pressure drop less than or equal to the value required for compliance, and at an airflow rate greater than or equal to the design airflow for the air filter, then the indoor unit complies.

RA3.2 Field Verification and Diagnostic Testing of Refrigerant Charge for Air Conditioners and Heat Pumps

RA3.2.1 Purpose and Scope

(a) The procedures in Appendix RA3.2 are for use for residential air-cooled air conditioners and air-source heat pumps to verify the systems have the required refrigerant charge.

(b) For dwelling units with multiple air conditioners or heat pumps, the procedures shall be applied to each system separately.

(c) Appendix RA3.2 defines two procedures, the Standard Charge Verification Procedure in Section RA3.2.2 and the Weigh-in Charging procedure in Section RA3.2.3.

(d) Sections 150.1(c)7 and 150.2(b)1F specify the requirements for minimum system airflow rates to be verified in conjunction with the refrigerant charge verification.

(e) Failure to follow the manufacturer’s installation and charging instructions may result in significant refrigeration system faults that may invalidate refrigerant charge and metering device verification results. The installer shall certify that he/she has conformed to the manufacturer’s instructions and specifications for charging the system prior to proceeding with the verification procedures in this appendix.

(f) In the case where the Energy Commission has approved an alternative protocol as described in RA1, the HVAC Installer and HERS Rater may choose to perform the alternative refrigerant charge verification procedure.

RA3.2.1.1 Scope of the Standard Charge Verification Procedure (RA3.2.2)

(a) The procedures in Section RA3.2.2 are applicable to ducted split system air-cooled air conditioners and ducted split system air-source heat pumps, and may be applicable to packaged air-cooled air conditioners and packaged air-source heat pumps.

(b) The procedures in Section RA3.2.2 require verification of the applicable minimum system airflow rate across the cooling coil when refrigerant charge is verified.

(c) The procedures in Section RA3.2.2 require verification (for applicable systems) that the metering device is operating properly.

(d) The procedures in Section RA3.2.2 may be used when the outdoor air temperature is 55°F or above.

(e) When refrigerant charge verification is required for compliance, the applicable procedures in Section RA3.2.2 shall be used by the HVAC installer after installing a new HVAC system or after altering refrigerant-containing components in an existing HVAC system, and after charging the air conditioner or heat pump system in accordance with the manufacturer's instructions and specifications.

(f) The applicable procedures in Section RA3.2.2 shall always be used by the HERS Rater for verification of the system's refrigerant charge when HERS verification is required for compliance unless an applicable alternate procedure is available in Reference Residential Appendix RA1, or the Standards specify the Section RA3.2.3.2 procedure (observation of weigh-in) as mandatory for compliance, or as an available option for compliance and the HVAC installer elects to use the RA3.2.3.2 procedure for HERS verification.

(g) When the procedures in Section RA3.3.3.1.5 (alternative to compliance with minimum system airflow) are utilized for compliance, HERS verification compliance shall not use group sampling.

RA3.2.1.2 Scope of the Weigh-In Charging Procedure (RA3.2.3)

(a) The procedures in Section RA3.2.3 are applicable to air-cooled air conditioners or air-source heat pumps.

(b) The weigh-in charging procedure is an acceptable method for demonstrating compliance at any outdoor temperature.

(c) Use of the Section RA3.2.3 procedure does not exempt the system from compliance with all applicable minimum airflow rate verification requirements.

(d) When the procedures in Section RA3.2.3 are utilized by the HVAC installer, HERS verification compliance shall not use group sampling.

(e) The procedures in Section RA3.2.3.1 may be used by the HVAC installer as an alternative to the Standard Charge Verification Procedure in RA3.2.2, or as an alternative to any applicable Alternative Refrigerant Charge Verification Protocol in Reference Residential Appendix RA1.

(f) The procedures in Section RA3.2.3.1 shall be used by HVAC installers when refrigerant charge verification is required for compliance when the outdoor air temperature is below 55°F, and there is no applicable alternative refrigerant charge verification protocol in Reference Residential Appendix RA1 available for use with the system for outdoor temperatures below 55°F.

(g) The procedures in Section RA3.2.3.1 shall be used by HVAC installers when refrigerant charge verification is required for compliance when the standard charge verification procedure in RA3.2.2 is not applicable to the system that must demonstrate compliance, and there is no applicable alternative refrigerant charge verification protocol in Reference Residential Appendix RA1 available for use with the system.

(h) The procedures in Section RA3.2.3.1 shall not be utilized by HERS Raters for verification of refrigerant charge.

(i) The procedures in Section RA3.2.3.2 shall be utilized by HERS Raters for verification of refrigerant charge only when the Standards specify that the RA3.2.3.2 procedure shall be used for HERS verification compliance, otherwise only when the Standards specify the RA3.2.3.2 procedure is an available option, and the HVAC installer elects to use the RA3.2.3.2 procedure for HERS verification compliance.

RA3.2.2 Standard Charge Verification Procedure

This section specifies the standard charge verification procedure. Under this procedure, the refrigerant charge is verified using the "superheat charging method" for systems with fixed metering devices, or the "subcooling charging method" for systems with thermostatic expansion valves (TXV) or electronic expansion valves (EXV).

The following sections describe the required instrumentation; required calibration for the instrumentation; required diagnostic measurements; and the required calculations to determine results that must be compared to the criteria in Table RA3.2-1 to determine compliance.

Refrigerant charge verification utilizing the procedures in Section RA3.2.2 requires compliance with a minimum airflow rate across the cooling coil at the time of charge verification, as specified by Standards Sections 150.1(c)7Aib and 150.2(b)1Fiia as applicable.

Table RA3.2-1 summarizes the standard charge verification protocols and defines the corresponding compliance criteria that shall be used by system installers and HERS Raters.

Table RA3.2-1 – Refrigerant Charge Verification Protocols and Compliance Criteria

Case	User Application	Compliance Criteria	Procedure(s)
Standard Charge Verification Procedure - Fixed Metering Device Systems	Installer Testing at Final	55°F ≤ Outdoor Air Dry-bulb Temp ≤ 115°F Return Air Dry-bulb Temp ≥ 70°F Return Air Wet-bulb Temp ≤ 76°F Superheat tolerance ±5°F of the specified target	RA3.2.2.6.1
Standard Charge Verification Procedure - Fixed Metering Device Systems	HERS Rater Testing	55°F ≤ Outdoor Air Dry-bulb Temp ≤ 115°F Return Air Dry-bulb Temp ≥ 70°F Return Air Wet-bulb Temp ≤ 76°F Superheat tolerance ±8°F of the specified target	RA3.2.2.6.1
Standard Charge Verification Procedure - Variable Metering Device Systems	Installer Testing at Final	55°F ≤ Outdoor Air Dry-bulb Temp ≤ 120°F Return Air Dry-bulb Temp ≥ 70°F Subcooling tolerance ±3°F of the manufacturer-specified target[1] Metering Device tolerance: Superheat meets the Manufacturer's specifications or 4°F ≤ Superheat ≤ 25°F	RA3.2.2.6.2
Standard Charge Verification Procedure - Variable Metering Device Systems	HERS Rater Testing	55°F ≤ Outdoor Air Dry-bulb Temp ≤ 120°F Return Air Dry-bulb Temp ≥ 70°F Subcooling tolerance ±6°F of the manufacturer-specified target[1] and Subcooling ≥2°F Metering Device tolerance: Superheat meets the Manufacturer's specifications or 3°F ≤ Superheat ≤ 26°F	RA3.2.2.6.2

Note:

1. If a manufacturer-specified subcooling target value is not available or cannot be determined, the Executive Director may provide additional guidance for compliance.

The standard charge verification procedure detailed in this section may be used to demonstrate compliance when the outdoor temperature is within the manufacturer's specified temperature range, or the outdoor temperature is 55°F or higher, after the HVAC installer has installed and charged the system in accordance with the manufacturer's specifications. The return dry bulb temperature shall be maintained above 70°F during the test.

This procedure does not relieve the installing contractor from any obligation to conform to the manufacturers' specifications for installation, refrigerant charge, or system operation. This procedure is used to determine compliance with Title 24, Part 6.

RA3.2.2.1 Minimum Qualifications for this Procedure

Persons who use this procedure to demonstrate compliance with Title 24 Part 6 shall be qualified to perform the following:

(a) Obtain accurate system pressure and saturation temperature readings utilizing digital refrigeration gauges.

(b) Obtain accurate temperature readings utilizing a digital thermometer and temperature sensors.

(c) Check calibration of digital refrigerant gauges using a known reference pressure.

(d) Check calibration of digital thermometer and temperature sensors using a known reference temperature.

(e) Determine the required or best location for temperature measurements in duct systems and on refrigerant lines.

(f) Calculate the measured superheat and subcooling.

(g) Determine the required superheat, based on the conditions present at the time of the test.

(h) Determine if measured values are accurate.

RA3.2.2.2 Instrumentation Specifications

Instrumentation for the procedures described in this section shall conform to the following specifications:

RA3.2.2.2.1 Digital Temperature Measurement Specifications

Temperature measurements shall be made utilizing digital temperature measurement instrumentation (combined sensor plus device for data acquisition, processing and reporting) that shall have dual channel capability in Celsius or Fahrenheit and conform to the following specifications:

RA3.2.2.2.1.1 *Dry-bulb Air Temperature Measurements*

Air temperature measurements made of supply or return airflow and the outdoor air entering the condensing unit shall meet the following specifications:

(a) Accuracy: ± 2°F.

(b) Resolution: 0.2°F.

RA3.2.2.2.1.2 *Wet-bulb Air Temperature Measurements Using Wetted Wick*

Air temperature measurements made of return airflow using the wetted wick method shall use a temperature sensor and a clean cotton wick wetted with distilled water. Temperature measurements using this method shall meet the following specifications:

(a) Accuracy: ± 2°F.

(b) Resolution: 0.2°F.

RA3.2.2.2.1.3 *Wet-bulb air Temperature Measurements Using Digital Hygrometer Device*

Air temperature measurements made of return airflow using a digital hygrometer device shall have a probe that is a minimum of 3 inches in length, and be capable of measurements for both dry-bulb and wet-bulb temperature. Dry-bulb and wet-bulb temperature measurements made with digital hygrometer devices shall meet the following specifications:

(a) Accuracy: ± 2°F wet-bulb temperature; or a calculated wet-bulb temperature based on accuracies of ± 3% RH and ± 2.0 degree F Dry bulb temperature.

(b) Resolution: 0.2°F.

RA3.2.2.2.1.4 *Refrigerant Lines - Pipe Temperature Measurement*

Temperature measurement of suction or liquid refrigerant lines using sensor mounting styles such as pipe-clamp sensors, Velcro strap-on, or an equivalent sensor device or sensor mounting method shall meet the following specifications:

(a) Accuracy: ± 2°F.

(b) Resolution: 0.2°F.

RA3.2.2.2.2 Temperature Sensor Specifications

RA3.2.2.2.2.1 *Response Time Qualification Specification for Air Temperature Sensors*

Measurements for verification of refrigerant charge require air temperature sensors that pass the following qualifying test:

(a) Using a test enclosure or test environment that is maintained at known dry bulb temperature T1;

(b) The temperature sensor subjected to the qualifying test shall be placed outside the test enclosure or test environment until its temperature has stabilized at a drybulb temperature T2;

(c) The absolute value of (T1 minus T2) shall be greater than 40ºF; and

(d) The sensor shall have a response time that produces the accuracy specified in Section RA3.2.2.2.1 within 90 seconds of insertion into the test enclosure or test environment.

RA3.2.2.2.2.2 *Response Time and Application Specification for Pipe Temperature Sensors*

Measurements for verification of refrigerant charge require two (2) pipe temperature sensors that pass the following qualifying test:

(a) Using test pipes in six sizes (1/4” dia., 3/16” dia., 3/8” dia., 3/4” dia., 7/8” dia., 1 1/8” dia.) that are maintained at a known temperature T1 in a test enclosure or test environment that is maintained at a known dry-bulb temperature T2;

(b) The absolute value of (T1 minus T2) is greater than 40ºF;

(c) The temperature sensor subjected to the qualifying test shall be placed in the test enclosure or test environment until its temperature has is stabilized at T2;

(d) The sensor shall have a response time that produces the accuracy specified in Section RA3.2.2.2.1.4 within 90 seconds of application of the sensor to one of the test pipes; and

(e) A sensor may be used for more than one pipe size if it passes the above test for each pipe size for which it is used.

RA3.2.2.2.3 Digital Refrigerant Gauge Specifications

Refrigerant pressure measurements shall be made utilizing digital measurement instrumentation. Measurements made with digital refrigerant pressure measurement devices shall meet the following specifications

(a) Accuracy: ± 7.0 psi liquid line pressure

(b) Accuracy: ± 3.5 psi suction pressure

As an alternative, two saturation pressure measurement sensors (SPMS) may be permanently installed by the equipment manufacturer, or in a manner and location approved by the equipment manufacturer for use for measuring the saturation pressure of the refrigerant in the evaporator coil and in the condenser coil. Refer to Reference Joint Appendix JA6.2 for additional specification for SPMS.

RA3.2.2.3 Measurement Access Hole (MAH) Specification

When required for compliance by Standards Section 150.1(c)7Aia, or when return plenum measurements are necessary for compliance with refrigerant charge verification requirements, a 5/8 inch (16 mm) diameter hole shall be provided as shown in Figure RA3.2-1.

Return plenum temperature measurements shall be taken at the location specified in Figure RA3.2-1 when performing the procedures in RA3.2. The measurement access shall be sealed to prevent leakage after the measurements have been completed.

The hole location shown in Figure RA3.2-1 can be applied to any one of the four sides of the return plenum. The hole location shall be labeled "Title 24 – Return Plenum Measurement Access" in at least 12-point type.

For air-handling units with the return located entirely within conditioned space (such as when an up-flow air handler is mounted on a pedestal in a closet in the dwelling, or when the return grille is an integral part of the air-handling unit), the return plenum measurement access hole is not required, and in this case the return air temperature measurements shall be taken at the return grill when performing the procedures in RA3.2.

Systems that cannot conform to the specifications for the hole location shown in Figure RA3.2-1 shall not be required to have holes as described in Figure RA3.2-1; however if return plenum measurements are required for compliance, an alternate location that provides access for making an accurate return plenum measurement shall be used.

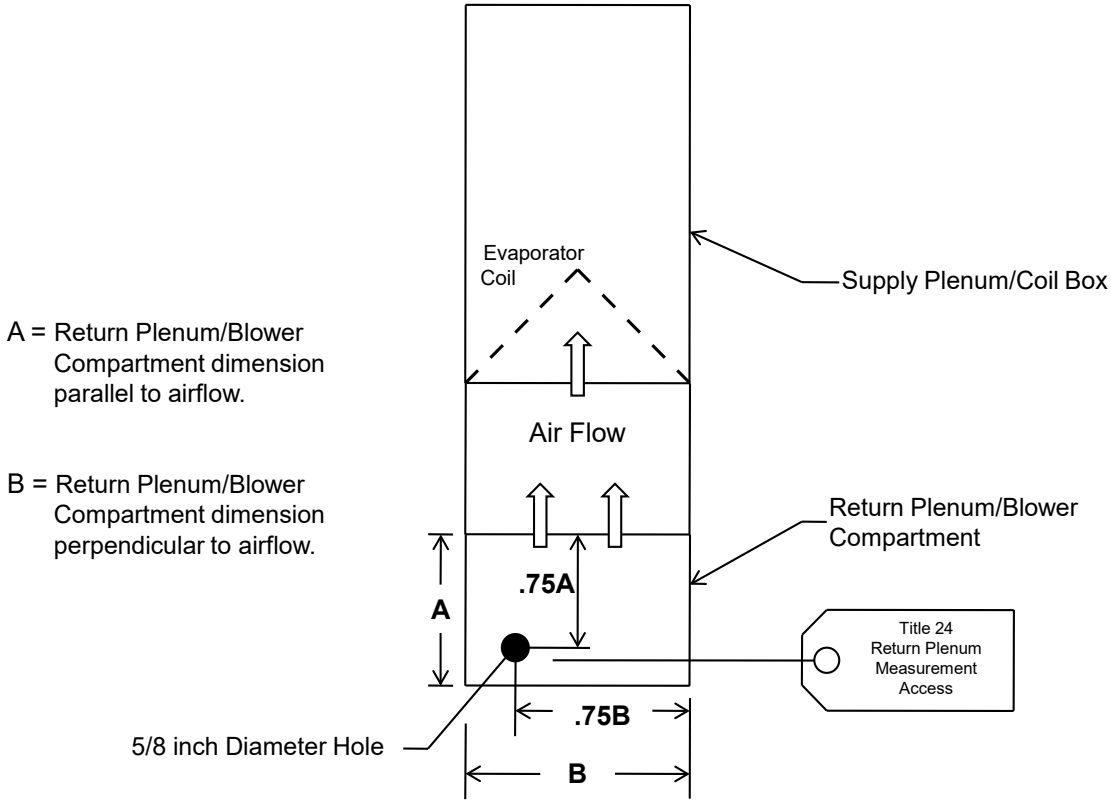

Figure RA3.2-1 Measurement Access Hole

RA3.2.2.4 Calibration

The accuracy of instrumentation shall be maintained using the following procedures. A sticker with the calibration check date shall be affixed to each instrument calibrated.

RA3.2.2.4.1 Digital Thermometer and Temperature Sensor Field Calibration Procedure

Thermometers with their temperature sensors shall be calibrated monthly to ensure that they are reading accurate temperatures.

The following procedure shall be used to check thermometer/temperature sensor calibration:

(a) Fill an insulated cup (foam) with crushed ice from distilled water. The ice shall completely fill the cup. Add distilled water to fill the cup.

(b) Insert two sensors into the center of the ice bath and attach them to the digital thermometer.

(c) Let the temperatures stabilize. The temperatures shall be 32 degrees Fahrenheit (plus or minus 1 degrees Fahrenheit). If the temperature is off by more than 1 degrees Fahrenheit make corrections according to the manufacturer's instructions. Any sensors that are off by more than 2 degrees Fahrenheit shall be replaced.

(d) Switch the sensors and ensure that the temperatures read on both channels are still within plus or minus 1 degrees Fahrenheit of 32 degrees Fahrenheit.

(e) Affix sticker with calibration check date onto sensor.

(f) Repeat the process for all sensors.

RA3.2.2.4.2 Digital Refrigerant Gauge Field Check Procedure

Refrigerant gauges shall be checked monthly to ensure that the gauges are reading the correct pressures and corresponding temperatures. The following procedure shall be used to check gauge calibration:

(a) Place a refrigerant cylinder in a stable temperature environment and let it acclimate for 4 hours minimum to stabilize to the ambient conditions.

(b) Attach a calibrated temperature sensor to the refrigerant cylinder using tape so that there is good contact between the cylinder and the temperature sensor.

(c) Insulate over the temperature sensor connection to the cylinder.

(d) Zero the low side and high side refrigerant gauges with all ports open to atmospheric pressure (no hoses attached).

(e) Re-install the hoses, attach the high side gauge to the refrigerant cylinder, and open the valves to measure the pressure in the refrigerant cylinder.

(f) Read the temperature of the sensor on the refrigerant cylinder.

(g) Using a pressure/temperature chart for the refrigerant, look up the pressure that corresponds to the temperature measured.

(h) If gauge does not read the correct pressure corresponding to the temperature, the gauge is out of calibration and needs to be recalibrated.

(i) Close the valve to the refrigerant cylinder, and bleed off a small amount of refrigerant to lower the high side pressure to give a corresponding temperature to between 45°F and 55°F.

(j) Open the valves between the high side gauge and low side gauge.

(k) If the two gauges corresponding refrigerant temperatures do not read within 1°F of each other, the low side gauge is out of calibration and needs to be recalibrated.

(l) Affix sticker with calibration check date onto refrigerant gauge.

RA3.2.2.4.3 Digital Hygrometer Calibration

Digital hygrometers shall be calibrated according to the manufacturer's recommended procedures. When the manufacturer certifies the calibration for a limited time, the digital hygrometer shall be recalibrated according to the manufacturers required procedure when the calibration period expires.

RA3.2.2.5 Charge Verification Measurements

The following procedure shall be used to obtain measurements necessary to verify the required refrigerant charge.

(a) Follow the manufacturer's directions and adhere to the manufacturer's limitations on indoor ambient air temperature ($T_{indoor\ air}$) and outdoor ambient air temperature ($T_{outdoor\ air}$) applicable to this procedure. Ensure that the return air dry bulb temperature remains equal to or greater than 70°F prior to and while performing the measurements.

(b) Verify that a liquid line filter drier has been installed if required per outdoor condensing unit manufacturer's instructions, and installed with the proper orientation with respect to refrigerant flow, if applicable.

(c) Connect the refrigerant gauges to the service ports, taking normal precautions to not introduce air into the system.

(d) Attach one pipe temperature sensor to the suction line near the suction line (low side) service valve and attach one pipe temperature sensor to the liquid line near the liquid line (high side) service valve. The sensors should be positioned to make good contact with the surface of the refrigerant line.

(e) Attach a temperature sensor to measure the condenser entering air dry-bulb temperature. The sensor shall be placed so that it records the average condenser air entering temperature and is shaded from direct sun.

(f) Insert a dry-bulb temperature sensor into the return plenum at the "Title 24 – Return Plenum Measurement Access" detailed in Section RA3.2.2.3.

(g) Be sure that all cabinet panels that affect airflow are in place before making measurements. The temperature sensors shall remain attached to the system until the final charge is determined.

(h) Operate the air conditioner in cooling mode for 15 minutes to allow the temperatures and pressures to stabilize before taking any measurements. While the system is stabilizing, proceed with setting up the remaining temperature sensors if used.

(i) If used, place the cotton wick wet-bulb temperature sensor in distilled water, and ensure it is saturated. Do not get the dry-bulb temperature sensors wet.

(j) If the system has a fixed metering device, at 12 minutes, insert a wet-bulb temperature sensor into the return plenum at the "Title 24 – Return Plenum Measurement Access" detailed in Section RA3.2.2.3.

(k) If the system has a fixed metering device, after the system has operated for 15 minutes, and when the return plenum wet-bulb temperature has stabilized, using the temperature sensor already in place, measure and record the return (evaporator entering) air wet-bulb temperature ($T_{return,\ wb}$).

(l) Using the temperature sensor already in place, measure and record the return (evaporator entering) air dry-bulb temperature ($T_{return,\ db}$).

(m) Using the refrigerant gauge or saturation pressure measurement sensor already attached, measure and record the suction line (low side) pressure, and record the refrigerant saturation temperature corresponding to the measured low side pressure ($T_{evaporator, sat}$).

(n) Using the refrigerant gauge or saturation pressure measurement sensor already attached, measure and record the liquid line (high side) pressure, and record the refrigerant saturation temperature corresponding to the measured high side pressure ($T_{condenser, sat}$).

(o) Using the pipe temperature sensor already in place, measure and record the suction line temperature ($T_{suction,}$).

(p) Using the pipe temperature sensor already in place, measure and record the liquid line temperature (T_{liquid}).

(q) Using the dry-bulb temperature sensor already in place, measure and record the condenser (entering) air dry-bulb temperature ($T_{condenser, db}$).

The above measurements shall be used to verify the refrigerant charge as described in following sections.

RA3.2.2.6 Refrigerant Charge and Metering Device Calculations

The following steps describe the calculations to determine if the system meets the required refrigerant charge and metering device function using the measurements determined in Section RA3.2.2.5. If a system fails, then remedial actions must be taken by the HVAC system installer. Be sure to run the air conditioner for 15 minutes after the final adjustments before taking any measurements.

RA3.2.2.6.1 Fixed Metering Device Calculations - Superheat Charging Method

The Superheat Charging Method is used only for systems equipped with fixed metering devices. These include capillary tubes and piston-type metering devices.

(a) Calculate Actual Superheat as the suction line temperature minus the evaporator saturation temperature.

$$\text{Actual Superheat} = T_{suction}, - T_{evaporator, sat}.$$

(b) Determine and record the Target Superheat using Table RA3.2-2 or the manufacturer's superheat chart using the return air wet-bulb temperature ($T_{return, wb}$) and condenser air dry-bulb temperature ($T_{condenser, db}$).

(c) If a dash mark is read from Table RA3.2-2, the target superheat is less than 5°F. Note that a valid refrigerant charge verification test cannot be performed under these conditions. A severely undercharged unit will show over 9°F of superheat. However overcharged units cannot be detected from the superheat method under these conditions. The usual reason for a target superheat determination of less than 5°F is that outdoor conditions are too hot and the indoor conditions are too cool. One of the following is needed so a target superheat value can be obtained from Table RA3.2-2 either 1) turn on the space heating system and/or open the windows to warm up indoor temperature; or 2) retest at another time when conditions are different.

(d) Calculate the difference between actual superheat and target superheat (Actual Superheat - Target Superheat).

(e) In order to allow for inevitable differences in measurements, the Pass/Fail criteria are different for the Installer and the HERS Rater.

(f) For the Installer, if the difference is within the tolerance given as compliance criteria in Table RA3.2-1, then the system passes the required refrigerant charge criterion.

(g) For the HERS Rater inspecting the system, if the difference is within the criteria in Table RA3.2-1, then the system passes the required refrigerant charge criterion.

(h) For the Installer, if the system fails to meet the criteria, refrigerant needs to be added if the superheat is too high and refrigerant needs to be removed if it is too low. The installer needs to remain aware of other potential system faults. Adjust refrigerant charge and check the measurements as many times as necessary to pass the test. After the final adjustment has been made, allow the system to run 15 minutes before completing the final measurement procedure.

RA3.2.2.6.2 Variable Metering Device Calculations – Subcooling Charging Method

The Subcooling Charging Method is used for systems equipped with variable metering devices. These include Thermostatic Expansion Valves (TXV) and Electronic Expansion Valves (EXV). The amount of refrigerant is set based on the measured subcooling value, and the measured superheat value determines whether the metering device is working properly.

(a) Calculate Actual Subcooling as the condenser saturation temperature minus the liquid line temperature. Actual Subcooling = $T_{condenser, sat} - T_{liquid}$.

(b) Determine the Target Subcooling specified by the manufacturer.

(c) Calculate the deviation of the actual subcooling value from the target subcooling value. Subcooling Deviation = Actual Subcooling - Target Subcooling.

In order to allow for inevitable differences in measurements, the Pass/Fail criteria are different for the Installer than for the HERS Rater.

(d) If the Subcooling Deviation is within the subcooling tolerance allowed by Table RA3.2-1, then the system complies with the subcooling criterion, otherwise the system does not comply.

(e) For the HVAC installer, if the system does not comply, and if the Actual Subcooling value is greater than the Target Subcooling value, the Installer shall remove refrigerant. If the Actual Subcooling value is less than the Target Subcooling value, the Installer shall add refrigerant. The Installer shall determine whether there are other system faults that may affect the validity of the refrigerant charge verification procedure, and make any needed system repairs or adjustments to clear system faults prior to completion of the refrigerant charge verification procedure. The Installer shall adjust the refrigerant charge and check the measurements as many times as necessary to pass the test. After the final adjustment has been made, the Installer shall allow the system to run 15 minutes before completing the final measurement procedure.

(f) Calculate Actual Superheat as the suction line temperature minus the evaporator saturation temperature. Actual Superheat = $T_{suction,} - T_{evaporator, sat}$.

(g) If possible, determine the Superheat Range specified by the manufacturer.

(h) In order to allow for inevitable differences in measurements, the Pass/Fail criteria are different for the Installer than for the HERS Rater.

If the superheat is within the tolerance allowed by Table RA3.2-1, then the system complies with the metering device criterion, otherwise the system does not comply.

For the HVAC installer, if the system does not comply remedial actions must be undertaken to ensure the TXV or EXV is operating properly.

RA3.2.3 Weigh-In Charging Procedure

This section specifies the weigh-in charging procedure in which the weight of the required refrigerant charge is determined by using the manufacturer's specifications for a standard refrigerant charge weight and taking into account adjustment factors such as deviations in refrigerant line length and diameter. The calculated weight of refrigerant is then installed using a refrigerant scale. RA3.2.3 provides two procedures: Section RA3.2.3.1 shall be used by the HVAC installer when the weigh-in procedure is required by the Standards for compliance. Section RA3.2.3.2 shall be used by the HERS Rater when the Standards specify use of the procedure for compliance, or specify it as an optional procedure for compliance. The weigh-in charging procedure is an acceptable method for demonstrating compliance at any outdoor temperature, however if the weigh-in charging procedure is used, HERS verification of compliance cannot use group sampling.

HVAC installers shall use the weigh-in charging procedure in accordance with the space conditioning system manufacturer’s specifications.

Both the HVAC installer and the HERS Rater shall test the system airflow as specified by Standards Sections 150.1(c)7Aib and 150.2(b)1Fiia as applicable.

RA3.2.3.1 HVAC Installer - Weigh-In Charging Procedure

Split system air conditioners are shipped from the factory charged with a standard amount of refrigerant as indicated on the nameplate. The manufacturer-supplied refrigerant charge is expected to be the correct amount for the system based on a standard liquid line length and diameter. It is the responsibility of the HVAC installer to ensure that the charge is correct for each air conditioner and to adjust the charge based on liquid line dimensions that deviate from the manufacturer's standard line specification.

RA3.2.3.1.1 Procedure Options

There shall be two options for compliance using the weigh-in charging procedure:

RA3.2.3.1.1.1 *Weigh-in Charge Adjustment*

This option is applicable to a new system or existing system when a new outdoor unit is installed (with factory charge in outdoor unit). The HVAC installer shall weigh in lineset and indoor coil

charge adjustment after evacuation of lineset and indoor coil. The documentation shall include the calculated charge adjustment for the lineset.

RA3.2.3.1.1.2 *Weigh-in Total Charge*

This option is applicable to all systems. The installer shall weigh in the total system charge after refrigerant recovery and evacuation of the entire system. The total system charge includes the nameplate charge for the outdoor unit and any adjustment for the lineset dimensions and indoor coil in accordance with the manufacturer's instructions. The documentation shall include the nameplate charge and the calculated lineset adjustment.

RA3.2.3.1.2 Minimum Qualifications for this Procedure

Persons who use this procedure to demonstrate compliance with Title 24, Part 6 shall be qualified to perform the following:

(a) Calculate the correct system charge based on the Manufacturer's standard charge and adjustments to the standard charge based on lineset dimensions and indoor coil.

(b) Obtain accurate refrigerant charge weight.

RA3.2.3.1.3 Instrumentation Specifications

Instrumentation for the procedures described in this section shall conform to the following specifications:

RA3.2.3.1.3.1 *Refrigerant Scale*

An electronic refrigerant scale having an accuracy equal to or better than ±0.5 oz or ± 0.5% of the measured value shall be used.

RA3.2.3.1.4 Calibration

The accuracy of instrumentation shall be maintained using the following procedures. A sticker with the calibration check date shall be affixed to each instrument calibrated.

RA3.2.3.1.4.1 *Refrigerant Scale*

Refrigerant scales shall be calibrated according to the manufacturer's recommended procedures. When the manufacturer certifies the calibration for a limited time, the refrigerant scale shall be recalibrated according to the manufacturers required procedure when the calibration period expires.

RA3.2.3.1.5 Weigh-in Procedure

The weigh-in procedure shall be performed in accordance with all manufacturer specifications to confirm:

(a) Liquid line filter drier has been installed if required per outdoor condensing unit manufacturer's instructions, and installed with the proper orientation with respect to refrigerant flow, if applicable.

(b) The system is braised with dry nitrogen in the lines and indoor coil.

(c) The system is evacuated to 500 microns or less and, when isolated, rises no more than 300 microns over five minutes.

(d) The lineset correction is calculated based on the length and diameter of the lineset.

(e) The indoor coil correction to refrigerant weight is used if it is supplied by the manufacturer.

(f) The amount of charge calculated for the lineset correction (and indoor coil correction if available) is added or removed, or the total charge based on the lineset, indoor coil, and standard label charge is installed.

The HVAC Installer shall certify on the Certificate of Installation that the manufacturer's specifications for these procedures have been met.

RA3.2.3.2 HERS Rater - Observation of Weigh-In Charging Procedure

When the Standards indicate this procedure is required, or is an option for compliance, the HERS Rater shall coordinate with the HVAC Installer to observe the weigh-in charging procedure.

HERS Rater shall observe and confirm:

(a) The system is evacuated to 500 microns or less and, when isolated, rises no more than 300 microns over five minutes.

(b) The lineset correction is calculated based on the length and diameter of the lineset, including the liquid line filter drier if required per outdoor condensing unit manufacturer instructions.

(c) The indoor coil correction to refrigerant weight is used if it is supplied by the manufacturer.

(d) The installer adds or removes the amount of charge calculated for the lineset correction or installs the total charge based on lineset, indoor coil, and standard label charge.

Table RA3.2-2 Target Superheat (Suction Line Temperature - Evaporator Saturation Temperature)

Return Air Wet-Bulb Temperature (°F) (T return, wb)

-	-	50	51	52	53	54	55	56	57	58	59	60	61	62	63	64	65	66	67	68	69	70	71	72	73	74	75	76
Condenser Air Dry-Bulb Temperature (°F) (T condenser, db)	55	8.8	10.1	11.5	12.8	14.2	15.6	17.1	18.5	20.0	21.5	23.1	24.6	26.2	27.8	29.4	31.0	32.4	33.8	35.1	36.4	37.7	39.0	40.2	41.5	42.7	43.9	45.0
	56	8.6	9.9	11.	12.	14.	15.	16.	18.	19.	21.	22.	24.	25.	27.	28.	30.	31.	33.	34.	35.	37.	38.	39.	41.	42.	43.	44.
	57	8.3	9.6	11.	12.	13.	15.	16.	17.	19.	20.	22.	23.	25.	26.	28.	29.	31.	32.	34.	35.	36.	38.	39.	40.	41.	43.	44.
	58	7.9	9.3	10.	12.	13.	14.	16.	17.	19.	20.	21.	23.	24.	26.	27.	29.	30.	32.	33.	34.	36.	37.	38.	40.	41.	42.	43.
	59	7.5	8.9	10.	11.	13.	14.	15.	17.	18.	20.	21.	22.	24.	25.	27.	28.	30.	31.	32.	34.	35.	36.	38.	39.	40.	42.	43.
	60	7.0	8.4	9.8	11.	12.	14.	15.	16.	18.	19.	21.	22.	23.	25.	26.	28.	29.	31.	32.	33.	35.	36.	37.	39.	40.	41.	42.
	61	6.5	7.9	9.3	10.	12.	13.	14.	16.	17.	19.	20.	21.	23.	24.	26.	27.	29.	30.	31.	33.	34.	35.	37.	38.	39.	41.	42.
	62	6.0	7.4	8.8	10.	11.	13.	14.	15.	17.	18.	20.	21.	22.	24.	25.	27.	28.	29.	31.	32.	34.	35.	36.	38.	39.	40.	42.
	63	5.3	6.8	8.3	9.7	11.	12.	14.	15.	16.	18.	19.	20.	22.	23.	25.	26.	27.	29.	30.	32.	33.	34.	36.	37.	39.	40.	41.
	64	-	6.1	7.6	9.1	10.	12.	13.	14.	16.	17.	19.	20.	21.	23.	24.	25.	27.	28.	30.	31.	33.	34.	35.	37.	38.	39.	41.
	65	-	5.4	7.0	8.5	10.	11.	12.	14.	15.	17.	18.	19.	21.	22.	23.	25.	26.	28.	29.	31.	32.	33.	35.	36.	38.	39.	40.
	66	-		6.3	7.8	9.3	10.	12.	13.	15.	16.	18.	19.	20.	22.	23.	24.	26.	27.	29.	30.	32.	33.	34.	36.	37.	39.	40.
	67	-	-	5.5	7.1	8.7	10.	11.	13.	14.	16.	17.	18.	20.	21.	22.	24.	25.	27.	28.	30.	31.	33.	34.	35.	37.	38.	39.
	68	-	-	-	6.3	8.0	9.5	11.	12.	14.	15.	16.	18.	19.	20.	22.	23.	25.	26.	28.	29.	31.	32.	33.	35.	36.	38.	39.
	69	-	-	-	5.5	7.2	8.8	10.	11.	13.	14.	16.	17.	19.	20.	21.	22.	24.	26.	27.	29.	30.	32.	33.	34.	36.	37.	39.
	70	-	-	-	-	6.4	8.1	9.7	11.	12.	14.	15.	17.	18.	19.	20.	22.	23.	25.	27.	28.	30.	31.	33.	34.	35.	37.	38.
	71	-	-	-	-	5.6	7.3	8.9	10.	12.	13.	15.	16.	17.	19.	20.	21.	23.	24.	26.	28.	29.	31.	32.	34.	35.	36.	38.
	72	-	-	-	-	-	6.4	8.1	9.8	11.	12.	14.	15.	17.	18.	19.	21.	22.	24.	25.	27.	29.	30.	32.	33.	35.	36.	37.
	73	-	-	-	-	-	5.6	7.3	9.0	10.	12.	13.	15.	16.	17.	19.	20.	22.	23.	25.	26.	28.	30.	31.	33.	34.	36.	37.
	74	-	-	-	-	-	-	6.5	8.2	9.9	11.	13.	14.	15.	17.	18.	20.	21.	23.	24.	26.	28.	29.	31.	32.	34.	35.	37.
	75	-	-	-	-	-	-	5.6	7.4	9.2	10.	12.	13.	15.	16.	18.	19.	21.	22.	24.	25.	27.	29.	30.	32.	33.	35.	36.
	76	-	-	-	-	-	-	-	6.6	8.4	10.	11.	13.	14.	16.	17.	18.	20.	22.	23.	25.	27.	28.	30.	31.	33.	34.	36.
	77	-	-	-	-	-	-	-	5.7	7.5	9.3	11.	12.	14.	15.	16.	18.	20.	21.	23.	24.	26.	28.	29.	31.	32.	34.	36.
	78	-	-	-	-	-	-	-	-	6.7	8.5	10.	11.	13.	14.	16.	17.	19.	21.	22.	24.	26.	27.	29.	30.	32.	34.	35.
	79	-	-	-	-	-	-	-	-	5.9	7.7	9.5	11.	12.	14.	15.	17.	18.	20.	22.	23.	25.	27.	28.	30.	32.	33.	35.
	80	-	-	-	-	-	-	-	-	-	6.9	8.7	10.	12.	13.	15.	16.	18.	20.	21.	23.	25.	26.	28.	29.	31.	33.	34.
	81	-	-	-	-	-	-	-	-	-	6.0	7.9	9.7	11.	12.	14.	16.	17.	19.	21.	22.	24.	26.	27.	29.	31.	32.	34.
	82	-	-	-	-	-	-	-	-	-	5.2	7.1	8.9	10.	12.	13.	15.	17.	18.	20.	22.	24.	25.	27.	29.	30.	32.	34.
	83	-	-	-	-	-	-	-	-	-	-	6.3	8.2	9.9	11.	13.	14.	16.	18.	20.	21.	23.	25.	26.	28.	30.	32.	33.
	84	-	-	-	-	-	-	-	-	-	-	5.5	7.4	9.2	10.	12.	14.	16.	17.	19.	21.	23.	24.	26.	28.	29.	31.	33.
	85	-	-	-	-	-	-	-	-	-	-	-	6.6	8.5	10.	11.	13.	15.	17.	19.	20.	22.	24.	26.	27.	29.	31.	32.
	86	-	-	-	-	-	-	-	-	-	-	-	5.8	7.8	9.6	11.	13.	15.	16.	18.	20.	22.	23.	25.	27.	29.	30.	32.
	87	-	-	-	-	-	-	-	-	-	-	-	5.0	7.0	8.9	10.	12.	14.	16.	18.	19.	21.	23.	25.	26.	28.	30.	32.
	88	-	-	-	-	-	-	-	-	-	-	-	-	6.3	8.2	10.	12.	13.	15.	17.	19.	21.	22.	24.	26.	28.	30.	31.
	89	-	-	-	-	-	-	-	-	-	-	-	-	5.5	7.5	9.4	11.	13.	15.	17.	18.	20.	22.	24.	26.	27.	29.	31.

Shaded area requires return plenum temperature of 70°F or higher.

Table RA3.2-2 Target Superheat (Suction Line Temperature - Evaporator Saturation Temperature)

		Return Air Wet-Bulb Temperature (°F) (T return, wb)																									
		50	51	52	53	54	55	56	57	58	59	60	61	62	63	64	65	66	67	68	69	70	71	72	73	74	75	76
Condenser Air Dry-Bulb Temperature (°F) (T condenser, db)	90	-	-	-	-	-	-	-	-	-	-	-	-	-	6.8	8.8	10.9	12.8	14.6	16.5	18.3	20.1	22.0	23.8	25.6	27.5	29.3	31.1
	91	-	-	-	-	-	-	-	-	-	-	-	-	-	6.1	8.1	10.3	12.2	14.1	15.9	17.8	19.7	21.5	23.4	25.2	27.1	28.9	30.8
	92	-	-	-	-	-	-	-	-	-	-	-	-	-	5.4	7.5	9.8	11.7	13.5	15.4	17.3	19.2	21.1	22.9	24.8	26.7	28.5	30.4
	93	-	-	-	-	-	-	-	-	-	-	-	-	-	-	6.8	9.2	11.1	13.0	14.9	16.8	18.7	20.6	22.5	24.4	26.3	28.2	30.1
	94	-	-	-	-	-	-	-	-	-	-	-	-	-	-	6.2	8.7	10.6	12.5	14.4	16.3	18.2	20.2	22.1	24.0	25.9	27.8	29.7
	95	-	-	-	-	-	-	-	-	-	-	-	-	-	-	5.6	8.1	10.0	12.0	13.9	15.8	17.8	19.7	21.6	23.6	25.5	27.4	29.4
	96	-	-	-	-	-	-	-	-	-	-	-	-	-	-	-	7.5	9.5	11.4	13.4	15.3	17.3	19.2	21.2	23.2	25.1	27.1	29.0
	97	-	-	-	-	-	-	-	-	-	-	-	-	-	-	-	7.0	8.9	10.9	12.9	14.9	16.8	18.8	20.8	22.7	24.7	26.7	28.7
	98	-	-	-	-	-	-	-	-	-	-	-	-	-	-	-	6.4	8.4	10.4	12.4	14.4	16.4	18.3	20.3	22.3	24.3	26.3	28.3
	99	-	-	-	-	-	-	-	-	-	-	-	-	-	-	-	5.8	7.9	9.9	11.9	13.9	15.9	17.9	19.9	21.9	24.0	26.0	28.0
	100	-	-	-	-	-	-	-	-	-	-	-	-	-	-	-	5.3	7.3	9.3	11.4	13.4	15.4	17.5	19.5	21.5	23.6	25.6	27.7
	101	-	-	-	-	-	-	-	-	-	-	-	-	-	-	-	-	6.8	8.8	10.9	12.9	15.0	17.0	19.1	21.1	23.2	25.3	27.3
	102	-	-	-	-	-	-	-	-	-	-	-	-	-	-	-	-	6.2	8.3	10.4	12.4	14.5	16.6	18.6	20.7	22.8	24.9	27.0
	103	-	-	-	-	-	-	-	-	-	-	-	-	-	-	-	-	5.7	7.8	9.9	11.9	14.0	16.1	18.2	20.3	22.4	24.5	26.7
	104	-	-	-	-	-	-	-	-	-	-	-	-	-	-	-	-	5.2	7.2	9.3	11.5	13.6	15.7	17.8	19.9	22.1	24.2	26.3

Table RA3.2-2 Target Superheat (Suction Line Temperature - Evaporator Saturation Temperature)

		Return Air Wet-Bulb Temperature (°F) (T return, wb)																									
		50	51	52	53	54	55	56	57	58	59	60	61	62	63	64	65	66	67	68	69	70	71	72	73	74	75	76
Condenser Air Dry-Bulb Temperature (°F) (T condenser, db)	90	-	-	-	-	-	-	-	-	-	-	-	-	-	6.8	8.8	10.9	12.8	14.6	16.5	18.3	20.1	22.0	23.8	25.6	27.5	29.3	31.1
	91	-	-	-	-	-	-	-	-	-	-	-	-	-	6.1	8.1	10.3	12.2	14.1	15.9	17.8	19.7	21.5	23.4	25.2	27.1	28.9	30.8
	92	-	-	-	-	-	-	-	-	-	-	-	-	-	5.4	7.5	9.8	11.7	13.5	15.4	17.3	19.2	21.1	22.9	24.8	26.7	28.5	30.4
	93	-	-	-	-	-	-	-	-	-	-	-	-	-	-	6.8	9.2	11.1	13.0	14.9	16.8	18.7	20.6	22.5	24.4	26.3	28.2	30.1
	94	-	-	-	-	-	-	-	-	-	-	-	-	-	-	6.2	8.7	10.6	12.5	14.4	16.3	18.2	20.2	22.1	24.0	25.9	27.8	29.7
	95	-	-	-	-	-	-	-	-	-	-	-	-	-	-	5.6	8.1	10.0	12.0	13.9	15.8	17.8	19.7	21.6	23.6	25.5	27.4	29.4
	96	-	-	-	-	-	-	-	-	-	-	-	-	-	-	-	7.5	9.5	11.4	13.4	15.3	17.3	19.2	21.2	23.2	25.1	27.1	29.0
	97	-	-	-	-	-	-	-	-	-	-	-	-	-	-	-	7.0	8.9	10.9	12.9	14.9	16.8	18.8	20.8	22.7	24.7	26.7	28.7
	98	-	-	-	-	-	-	-	-	-	-	-	-	-	-	-	6.4	8.4	10.4	12.4	14.4	16.4	18.3	20.3	22.3	24.3	26.3	28.3
	99	-	-	-	-	-	-	-	-	-	-	-	-	-	-	-	5.8	7.9	9.9	11.9	13.9	15.9	17.9	19.9	21.9	24.0	26.0	28.0
	100	-	-	-	-	-	-	-	-	-	-	-	-	-	-	-	5.3	7.3	9.3	11.4	13.4	15.4	17.5	19.5	21.5	23.6	25.6	27.7
	101	-	-	-	-	-	-	-	-	-	-	-	-	-	-	-	-	6.8	8.8	10.9	12.9	15.0	17.0	19.1	21.1	23.2	25.3	27.3
	102	-	-	-	-	-	-	-	-	-	-	-	-	-	-	-	-	6.2	8.3	10.4	12.4	14.5	16.6	18.6	20.7	22.8	24.9	27.0
	103	-	-	-	-	-	-	-	-	-	-	-	-	-	-	-	-	5.7	7.8	9.9	11.9	14.0	16.1	18.2	20.3	22.4	24.5	26.7
	104	-	-	-	-	-	-	-	-	-	-	-	-	-	-	-	-	5.2	7.2	9.3	11.5	13.6	15.7	17.8	19.9	22.1	24.2	26.3
	105	-	-	-	-	-	-	-	-	-	-	-	-	-	-	-	-	-	6.7	8.8	11.0	13.1	15.2	17.4	19.5	21.7	23.8	26.0
	106	-	-	-	-	-	-	-	-	-	-	-	-	-	-	-	-	-	6.2	8.3	10.5	12.6	14.8	17.0	19.1	21.3	23.5	25.7
	107	-	-	-	-	-	-	-	-	-	-	-	-	-	-	-	-	-	5.7	7.9	10.0	12.2	14.4	16.6	18.7	21.0	23.2	25.4
	108	-	-	-	-	-	-	-	-	-	-	-	-	-	-	-	-	-	5.2	7.4	9.5	11.7	13.9	16.1	18.4	20.6	22.8	25.1
	109	-	-	-	-	-	-	-	-	-	-	-	-	-	-	-	-	-	-	6.9	9.1	11.3	13.5	15.7	18.0	20.2	22.5	24.7
	110	-	-	-	-	-	-	-	-	-	-	-	-	-	-	-	-	-	-	6.4	8.6	10.8	13.1	15.3	17.6	19.9	22.1	24.4
	111	-	-	-	-	-	-	-	-	-	-	-	-	-	-	-	-	-	-	5.9	8.1	10.4	12.6	14.9	17.2	19.5	21.8	24.1
	112	-	-	-	-	-	-	-	-	-	-	-	-	-	-	-	-	-	-	5.4	7.6	9.9	12.2	14.5	16.8	19.1	21.5	23.8
	113	-	-	-	-	-	-	-	-	-	-	-	-	-	-	-	-	-	-	-	7.2	9.5	11.8	14.1	16.4	18.8	21.1	23.5
	114	-	-	-	-	-	-	-	-	-	-	-	-	-	-	-	-	-	-	-	6.7	9.0	11.4	13.7	16.1	18.4	20.8	23.2
	115	-	-	-	-	-	-	-	-	-	-	-	-	-	-	-	-	-	-	-	6.2	8.6	10.9	13.3	15.7	18.1	20.5	22.9

RA3.3 Field Verification and Diagnostic Testing of Forced Air System Airflow Rate, Fan Watt Draw, and Determination of Fan Efficacy.

RA3.3 contains procedures for:

(a) Verification of improved system airflow rate (cfm) in ducted split system and packaged space conditioning systems serving low-rise residential buildings.

(b) Verification of reduced fan power (Watt) draw achieved through improved air distribution system design, including more efficient motors and ducts that have less resistance to airflow.

(c) Determination of fan efficacy (Watt/cfm) utilizing simultaneous measurement of system Watt draw and airflow rate.

RA3.3.1 Instrumentation Specifications

The instrumentation for the diagnostic measurements shall conform to the following specifications:

RA3.3.1.1 Pressure Measurements

All pressure measurements shall be performed with measurement systems (i.e., sensor plus data acquisition system) having an accuracy of ± 1% of pressure reading or ± 0.2 Pa (.0008 inches water) (whichever is greater). All pressure measurements within the duct system shall be made with static pressure probes such as Dwyer A303 or equivalent.

When required for compliance with Standards Section 150.0(m)13A, or when supply plenum pressure measurements are used for plenum pressure matching or flow grid measurements, a 5/16 inch (8 mm) diameter hole for a static pressure probe (HSPP) or a permanently affixed static pressure probe (PSPP) shall be provided as shown in Figure RA3.3-1.

When supply plenum pressure measurements are used for plenum pressure matching or flow grid measurements, the supply plenum pressure measurement shall be taken at the supply plenum measurement access location as shown in Figure RA3.3-1.

The hole location shown in Figure RA3.3-1 can be applied to any one of the four sides of the coil box or supply plenum. The hole location shall be labeled "Title 24 – Supply Plenum Measurement Access" in at least 12-point type.

Systems that cannot conform to the specifications for the hole location shown in Figure RA3.3-1 shall not be required to have holes as described in Figure RA3.3-1; however if supply plenum pressure measurements are required for compliance, an alternate location that provides access for making an accurate supply plenum pressure measurement shall be used.

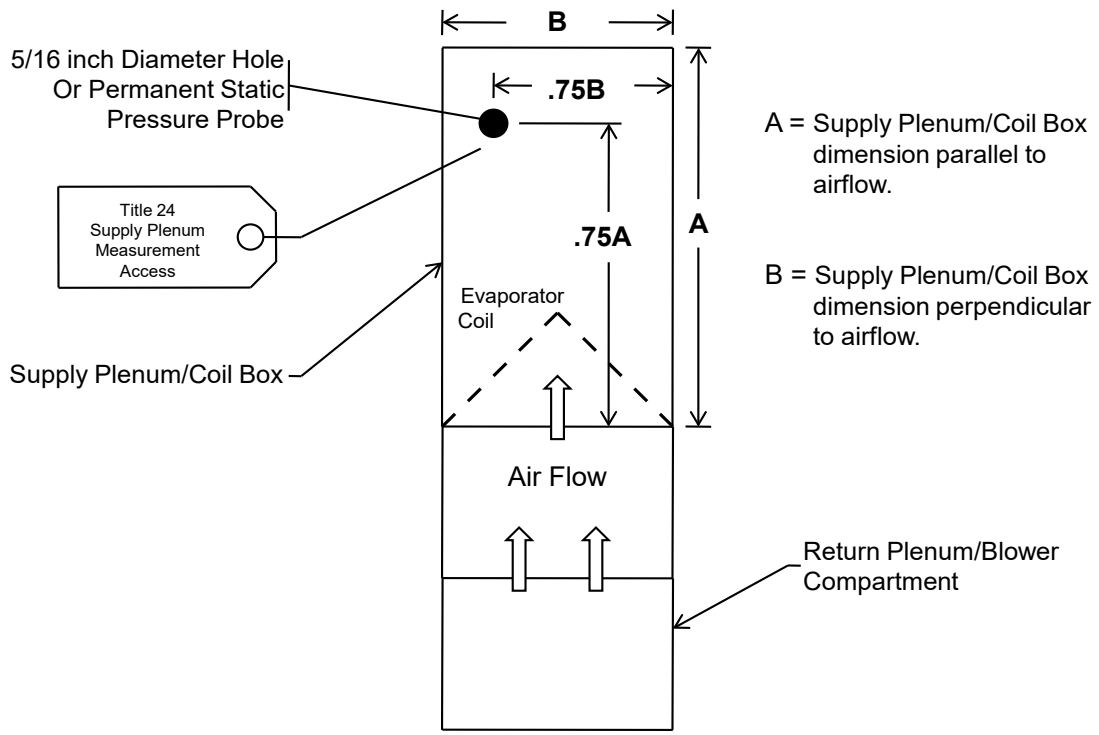

Figure RA3.3-1 Hole for the Placement of a Static Pressure Probe (HSPP) or Permanently Installed Static Pressure Probe (PSPP)

RA3.3.1.2 Airflow Rate Measurements

All measurements of system airflow rates shall be made with an airflow rate measurement apparatus (i.e., sensor plus data acquisition system) having an accuracy of ± 7% of reading or ± 5 cfm whichever is greater.

RA3.3.1.3 Fan Watt Draw Measurements

All measurements of air handler Watt draws shall be made with true power measurement systems (i.e., sensor plus data acquisition system) having an accuracy of ± 2% of reading or ± 10 watts whichever is greater.

RA3.3.2 Apparatus

RA3.3.2.1 System Airflow Rate Measurement Apparatus

Forced air system airflow rate shall be measured using one of the apparatuses listed in Section RA3.3.2. The apparatus shall produce airflow rate measurements that conform to the accuracy requirements specified in Section RA3.3.1.2 for measurements of residential forced air system airflow at system return grilles of single and multiple return duct systems.

The airflow rate measurement apparatus manufacturers shall publish in their product documentation, specifications for how their airflow measurement apparatuses are to be used for

accurately measuring residential system airflow at system return grilles of single and multiple return duct systems.

The airflow measurement apparatus manufacturers shall certify to the Energy Commission that use of the apparatus in accordance with the specifications given in the manufacturer's product documentation will produce measurement results that are within the accuracy required by Section RA3.3.1.2.

For the airflow measurement apparatuses that are certified to the Commission as meeting the accuracy required by Section RA3.3.1.2, the following information will be posted on the Energy Commission website, making the information available to all people involved in the airflow verification compliance process:

(a) The product manufacturers' model numbers for the airflow measurement apparatuses.

(b) The product manufacturers' product documentation that gives the specifications for use of the airflow measurement apparatuses to accurately measure residential system airflow at system return grilles of single and multiple return duct systems.

A manufacturer's certification to the Commission of the accuracy of the airflow measurement apparatus, and submittal to the Commission of the product documentation that specifies the proper use of the airflow measurement apparatus to produce accurate airflow rate measurements shall be prerequisites for allowing the manufacturer's airflow measurement apparatus to be used for conducting the system airflow verification procedures in Section RA3.3 for demonstrating compliance with Part 6.

RA3.3.2.1.1 Fan Flowmeter

The apparatus for measuring the system airflow rate shall consist of a duct pressurization and airflow measurement device (subsequently referred to as a fan flowmeter) that meets all applicable instrumentation specifications in Section RA3.3.1, and a static pressure measurement device that meets the specifications in Section RA3.3.1.1. The fan flowmeter shall be attached at the inlet to a return duct from the conditioned space. If the system is not a multi-zoned automatic dampered system, the fan flowmeter may be attached at the air handler blower compartment door as an alternative to placement at the inlet to a return duct from conditioned space. The fan flowmeter shall be attached at a point where all the airflow through the system will flow through it. When the air handler blower compartment door attachment alternative is used, an air barrier must be placed between the return duct system and the air handler inlet(s). All registers shall be in their normal operating condition. The static pressure probe shall be fixed to the supply plenum at the location specified in Section RA3.3.1.1 so that it is not moved during this test.

RA3.3.2.1.2 Flow Grid

The apparatus for measuring the system airflow rate shall consist of a flow measurement device (subsequently referred to as a flow grid) that meets all applicable instrumentation specifications in RA3.3.1 and a digital pressure measurement device that meets the specifications in Section RA3.3.1.1. The flow grid shall be attached at a point where all the fan airflow will flow through the flow grid. All registers shall be in their normal operating condition. The static pressure probe

shall be fixed to the supply plenum at the location specified in Section RA3.3.1.1 so that it is not moved during this test.

RA3.3.2.1.3 Powered Flow Capture Hood

A powered and pressure balanced flow capture hood (subsequently referred to as a Powered Flow Hood[1]) that has the capability to balance the flow capture static pressure difference between the room and the flow capture hood enclosure to 0.0 ± 0.2 Pa (.0008 inches water) and meets the applicable instrumentation specifications in Section RA3.3.1 may be used to verify the system airflow rate at the return grille(s) if the powered flow hood has a flow capture area at least as large as the return grille in all dimensions. The fan adjustment needed to balance the flow capture static pressure difference between the room and the flow capture hood enclosure to 0.0 ± 0.2 Pa (.0008 inches water) shall be provided by either an automatic control or a manual control operated in accordance with the apparatus manufacturer's instructions specified in the manufacturer's product documentation. All supply registers shall be in their normal operating position. Measurement(s) shall be taken at the return grille(s).

RA3.3.2.1.4 Traditional Flow Capture Hood

A traditional flow capture hood[2] meeting the applicable instrumentation specifications in Section RA3.3.1 may be used to verify the system airflow rate at the return grille(s) if the device has a capture area at least as large as the return grille in all dimensions. All registers shall be in their normal operating position. Measurement(s) shall be taken at the return grille(s).

RA3.3.2.2 Air Handler Watt Draw Measurement Apparatus

The air handler watt draw shall be measured using one of the following apparatuses.

RA3.3.2.2.1 Portable Watt Meter

The apparatus for measuring the air handler watt draw shall consist of a wattmeter meeting the applicable instrumentation specifications in RA3.3.1. The measuring device shall be attached to measure the air handler fan watt draw. All registers and blower access panel(s) shall be in their normal operating condition.

When required to measure fan watt draw in packaged and heat pump units, it is recommended to use portable true power clamp-on meters to provide flexibility for isolating the correct fan wires serving in packaged or heat pump units. Note: Higher voltage clamp-on meters may be required for packaged and heat pump units.

RA3.3.2.2.2 Utility Revenue Meter

The apparatus for measuring the air handler watt draw shall consist of the utility revenue meter meeting the applicable instrumentation specifications in RA3.3.1 and a stopwatch that provides

1 Also known as "active" flow hood, or "fan assisted" flow hood.

2 Also known as "non-powered" flow hood, "standard" flow hood, "commercially available" flow hood, or "passive" flow hood.

measurements in units of seconds. All registers and blower access panel(s) shall be in their normal operating condition.

RA3.3.2.2.3 Digital Utility Revenue Meter

The apparatus for measuring the air handler watt draw shall consist of the digital utility revenue meter meeting the applicable instrumentation specifications in RA3.3.1 that provides direct digital display of the Watt draw. All registers and blower access panel(s) shall be in their normal operating condition.

RA3.3.3 Procedures

RA3.3.3.1 System Airflow Rate Measurement Procedures

When required for compliance, the installed system's airflow shall be diagnostically tested using one of the methods specified in this section.

For systems utilizing an intentional ducted ventilation airflow from outside the conditioned space into the return system, the outside airflow may be included in the system airflow if that flow occurs in all operating modes of the HVAC system.

Diagnostic system airflow rate measurement values shall be converted to fan cfm/ton by dividing the measured system airflow rate (Qah) by the nominal tons of condensing unit cooling capacity for the air conditioner.

The measured airflow rate shall be expressed in cubic feet per minute of standard air (standard air has a density of 0.075 lb/ft^3). When the airflow measurement is made at altitudes significantly different from sea level or at temperatures significantly different from 70°F, the airflow indicated on the device gauge may differ from the standard CFM by as much as 15 percent. Corrections from indicated to standard CFM shall be made using the procedure specified by the airflow measurement device manufacturer.

RA3.3.3.1.1 System Airflow Rate Measurement Using Plenum Pressure Matching and Fan Flowmeter

This system airflow measurement shall be performed using the following procedures:

(a) If the fan flowmeter is to be connected to the air handler outside the conditioned space, then the door or access panel between the conditioned space and the air handler location shall be opened.

(b) With the system fan on at the maximum speed used in the installation (the cooling speed when air conditioning is present), measure the pressure difference (in Pa) between the supply plenum and the conditioned space (Psp). Psp is the target pressure to be maintained during the system airflow tests. Place the pressure probe in the Supply Pressure Measurement Location described in Section RA3.3.1.1. Adjust the probe to achieve the highest pressure and then firmly attach the probe to ensure that it does not move during the system airflow test.

(c) If the fan flowmeter is to be connected to the air handler at the access, block the return duct system from the plenum upstream of the air handler fan and the fan flowmeter. Filters are often located in an ideal location for this blockage.

(d) Attach the fan flowmeter to the duct system at the inlet to one return duct from the conditioned space with the grille and filter removed (if there is more than one system return grille, block off all return grilles other than the one used for this measurement. Alternatively the fan flowmeter may be placed at the air handler.

(e) Turn on the system fan and the fan flowmeter, adjust the fan flowmeter until the pressure between supply plenum and conditioned space matches Psp.

(f) Record the flow through the fan flowmeter (Qah, cfm) - this is the diagnostic system airflow. In some systems, system fan and fan flowmeter combinations may not be able to produce enough flow to reach Psp. In this case record the maximum flow (Qmax, cfm) and pressure (Pmax) between the supply plenum and the conditioned space. The following equation shall be used to correct measured system flow and pressure (Qmax and Pmax) to operating condition at operating pressure (Psp).

Equation RA3.3-1 Air Handler Flow

Qah = Qmax x (Psp/Pmax) ^0.5

RA3.3.3.1.2 System Airflow Rate Measurement Using Flow Grid

The system airflow measurement shall be performed using the following procedures:

(a) With the system fan on at the maximum speed used in the installation (the cooling speed when air conditioning is present), measure the pressure difference (in Pa) between the supply plenum and the conditioned space (Psp). Place the pressure probe in the Supply Pressure Measurement Location described in Section RA3.3.1.1. Adjust the probe to achieve the highest pressure and then firmly attach the probe to ensure that it does not move during the system airflow test.

(b) The flow grid shall be attached at a point where all the system air flows through the flow grid. If there are multiple return grilles in the duct system, flow grids may be used to measure airflow at the return grilles, but only by installing a flow grid in each return grill and making simultaneous measurements of all return grill airflows.

(c) Re-measure the system operating pressure with the flow grid in place.

(d) Measure the airflow through the flow grid (Qgrid) and the test pressure (Ptest). If multiple flow grids are used Qgrid is the sum of the flows through each of the flow grids.

(e) The following equation for air handler flow shall be used to correct flow through the flow grid and pressure (Qgrid and Ptest) to operating condition at operating pressure (Psp).

Equation RA3.3-2 Air Handler Flow

Qah = Qgrid x (Psp/Ptest) ^0.5

RA3.3.3.1.3 System Airflow Rate Measurement Using Powered Flow Capture Hood

The system airflow measurement shall be performed using the following procedures; all registers shall be fully open, and the air filter shall be installed. Turn on the system fan at the cooling speed and measure the airflow at the return grille(s) with a calibrated powered flow hood to determine the total system return airflow. Operation of the powered flow hood shall conform to the specifications in the manufacturer's product documentation. For multiple return systems, the total system return airflow (Qah, cfm) shall be the sum of the airflow measurements at each of the system's return grilles.

RA3.3.3.1.4 System Airflow Rate Measurement Using Traditional Flow Capture Hood

The system airflow measurement shall be performed using the following procedures; all registers shall be fully open, and the air filter shall be installed. Turn on the system fan at the cooling speed and measure the airflow at the return grille(s) with a calibrated traditional flow capture hood to determine the total system return airflow. For multiple return systems, the total system return airflow (Qah, cfm) shall be the sum of the airflow measurements at each of the system's return grilles.

RA3.3.3.1.5 Alternative to Compliance with Minimum System Airflow Requirements for Altered Systems

When an altered space conditioning system is unable to demonstrate compliance with the applicable minimum system airflow rate across the cooling coil required for refrigerant charge verification compliance, the system shall instead comply with Section RA3.3.3.1.5.1 below. If the remedial actions in Section RA3.3.3.1.5.1 fail to bring the system into compliance with the applicable minimum system airflow rate, the installer shall complete the refrigerant charge verification utilizing the highest system airflow rate attainable.

RA3.3.3.1.5.1 *Remedial Actions*

The installer shall attempt to correct non-compliant system airflow by performing the following remedial actions:

a) Check to determine that the air filter media is clean. If the air filter media is dirty, then replace it with clean filter media.

b) Open all registers and dampers and remove any obstructions.

c) Replace crushed, blocked or restricted ducts if possible.

d) Check to determine that the evaporator coil is clean, or that there are no obstructions to airflow through the evaporator coil. If the evaporator coil is dirty or blocked with debris, if possible, clean the evaporator coil using a method approved by the manufacturer.

e) Set the air handler fan to high speed for cooling, and ensure that the blower wheel and motor are operating properly, within manufacturer’s specifications.

f) Check to determine whether the return duct system or return filter grille is sized too small for the installed system. If the return duct or return grille is sized too small, if possible, perform applicable alterations work on the return duct system or return grille in order to improve the system airflow rate.

When performing these remedial actions determines that there is a fault, a corrective action shall be performed if possible. In many cases, airflow can be improved by adding a return duct and filter grille, or enlarging the existing return duct or filter grille. Alteration of the return duct system is an alternative that shall be considered if applicable to the existing system, and if other remedial actions do not improve the airflow. Alteration of the return duct system to bring the system airflow rate into compliance is expected to be attainable for systems with ducts in an attic space with sufficient clearances for accommodating improvements to the return duct system.

RA3.3.3.1.5.2 *Installer Compliance*

For each of the listed remedial actions, the HVAC installer shall certify that the remedial action was performed, and indicate whether the action was completed successfully or was not completed successfully. When a remedial action was not completed successfully the installer shall indicate on the installation certificate the reason the action was not completed successfully.

RA3.3.3.1.5.3 *HERS Rater Compliance*

The HERS Rater shall review the information submitted on the installation certificate and perform follow-up communications with the HVAC installer or the homeowner. The system complies if the HERS Rater determines the remedial actions have been performed, and the information reported on the installation certificate is valid.

RA3.3.3.2 Air Handler Fan Watt Draw Measurement Procedures

The diagnostic air handler watt draw shall be measured using one of the following methods:

RA3.3.3.2.1 Air Handler Watt Draw Measurement Using Portable Watt Meter

The air handler watt draw measurement shall be performed using the following procedures; all registers shall be fully open, and the air filter shall be installed. Turn on the system fan at the maximum speed used in the installation (usually the cooling speed when air conditioning is present; usually the cooling speed with outdoor air introduction if ventilation is provided through the return duct system) and measure the fan watt draw (Wfan).

When required to measure fan watt draw in packaged and heat pump units, it is recommended to use portable true power clamp-on meters to provide flexibility for isolating the correct fan wires serving in packaged or heat pump units. Note: Higher voltage clamp-on meters may be required for packaged and heat pump units.

RA3.3.3.2.2 Air Handler Watt Draw Measurement Using Utility Revenue Meter

The air handler watt draw measurement shall be performed using the following procedures; all registers shall be fully open, and the air filter shall be installed. Turn on the system fan at the

maximum speed used in the installation (usually the cooling speed when air conditioning is present; usually the cooling speed with outdoor air introduction if ventilation is provided through the return duct system) and turn off every circuit breaker except the one exclusively serving the air handler. Record the Kh factor on the revenue meter, count the number of full revolutions of the meter wheel over a period exceeding 90 seconds. Record the number of revolutions (Nrev) and time period (trev, seconds). Compute the air handler watt draw (Wfan) using the following formula:

Equation RA3.3-3 Air Handler Fan Watt Draw Wfan = (Kh x Nrev x 3600) / trev

Return all circuit breakers to their original positions.

RA3.3.3.2.3 Air Handler Watt Draw Measurement Using Digital Utility Revenue Meter

The air handler watt draw measurement shall be performed using the following procedures; all registers shall be fully open, and the air filter shall be installed. Turn on the system fan at the maximum speed used in the installation (usually the cooling speed when air conditioning is present; usually the cooling speed with outdoor air introduction if ventilation is provided through the return duct system) and turn off every circuit breaker except the one exclusively serving the air handler. Read the Watt draw from the digital utility meter digital display. Return all circuit breakers to their original positions.

RA3.3.3.3 Determination of Forced Air System Fan Efficacy

Demonstrating compliance with fan efficacy requirements requires simultaneous measurement of the system airflow rate using Section RA3.3.3.1 procedures and fan Watt draw using Section RA3.3.3.2 procedures. The results of the simultaneous airflow rate and fan Watt draw measurements are used for calculation of a value for the forced air system fan efficacy as follows:

(a) The measured value for fan Watt draw (Watt) shall be divided by the measured value for airflow rate (cfm) to determine the fan efficacy (Watt/cfm).

RA3.3.3.4 Determining Compliance with Fan Efficacy or System Airflow Requirements

Compliance with the requirements for improved airflow or for improved fan efficacy both require simultaneous measurement of airflow and fan Watts. The simultaneous measurements shall be used to calculate the following values used to determine compliance:

RA3.3.3.4.1 Airflow Calculation (cfm/ton)

For packaged systems, and for split systems with only one indoor unit, the measured value for airflow (cfm) shall be converted to cfm per ton by dividing the measured system airflow rate by the nominal tons of condensing unit cooling capacity.

For indoor units of multiple-split systems, the measured value for airflow in cfm shall be converted into cfm per ton by dividing the measured indoor unit airflow rate by the nominal tons of indoor unit cooling coil capacity.

RA3.3.3.4.2 Fan Efficacy Calculation (Watt/cfm)

The measured value for fan Watt draw (Watt) shall be divided by the measured value for airflow rate (cfm) to determine the fan efficacy (Watt/cfm).

RA3.3.3.4.3 Compliance Criteria

In order to comply with either the fan efficacy requirement, or the system airflow requirement, the following criteria shall be met:

(a) The system airflow (cfm/ton) shall meet or exceed the system airflow compliance criteria specified in the Standards or on the Certificate of Compliance as applicable.

(b) The calculated value for fan efficacy (Watt/cfm) shall be equal to or less than the fan efficacy compliance criterion specified in the Standards or on the Certificate of Compliance as applicable.

RA3.3.4 Verification of Central Fan Ventilation Cooling Systems (CFVCS)

When field verification and diagnostic testing of a central fan ventilation cooling system is required for compliance credit for the performance standards set forth in Standards Section 150.1(b), the CFVCS shall be verified according to the procedures in this section.

RA3.3.4.1 CFVCS Airflow Rate Measurements.

The CFVCS airflow shall be verified according to the applicable procedures specified in RA3.3.3.1, to measure and record the following system airflow rates:

a. The system airflow at high fan speed as required for compliance with Standards Section 150.0(m)13.

b. The system airflow rate at the speed used for ventilation cooling as specified on the Certificate of Compliance for the CFVCS.

RA3.3.4.2 CFVCS Air Handler Fan Watt Draw Measurements.

The CFVCS airflow shall be verified according to the applicable procedures specified in RA3.3.3.2, to measure and record the following system airflow Watt draw values:

a. The system Watt draw at high fan speed as required for compliance with Standards Section 150.0(m)13.

b. The system Watt draw at the speed used for ventilation cooling as specified on the Certificate of Compliance for the CFVCS.

RA3.3.4.3 Determination of CFVCS Fan Efficacy

Demonstrating compliance with fan efficacy requirements requires simultaneous measurement of the system airflow rate using Section RA3.3.4.1 procedures and fan Watt draw using Section RA3.3.4.2 procedures. The results of the simultaneous airflow rate and fan Watt draw

measurements shall be used for calculation of a value for the forced air system fan efficacy as follows:

a. The measured value for fan Watt draw (Watt) at high fan speed shall be divided by the measured value for airflow rate (cfm) at the high fan speed to determine the fan efficacy (Watt/cfm) for the CFVCS at high fan speed.

b. The measured value for fan Watt draw (Watt) at the ventilation fan speed shall be divided by the measured value for airflow rate (cfm) at the ventilation fan speed to determine the fan efficacy (Watt/cfm) for the CFVCS at ventilation fan speed.

RA3.3.4.4 Determining Compliance with Fan Efficacy and System Airflow Requirements

Compliance with the requirements for airflow rate and fan efficacy require that the Watt draw and airflow rate measurements are made simultaneously at both high speed and ventilation speed. The simultaneous measurements shall be used to calculate the following values used to determine compliance:

RA3.3.4.4.1 Fan Efficacy Calculation (Watt/cfm)

The measured value for fan Watt draw (Watt) shall be divided by the measured value for airflow rate (cfm) to determine the fan efficacy (Watt/cfm).

RA3.3.4.5 Compliance Criteria

In order for the CFVCS to comply, the requirements in both subsections a and b below shall be met:

a. The system airflow (cfm/ton) shall meet or exceed the system airflow compliance criteria specified on the Certificate of Compliance at both the high fan speed, and the ventilation fan speed.

b. The calculated value for fan efficacy (Watt/cfm) shall be equal to or less than the fan efficacy compliance criterion specified on the Certificate of Compliance at both the high fan speed, and the ventilation fan speed.

RA3.4 Field Verification of Installed HVAC System Components and Devices

RA3.4.1 Purpose and Scope

The purpose of these procedures is to verify that residential space cooling systems and heat pumps have the required components to achieve the energy efficiency claimed in the compliance documents. The procedures apply when a Fault Indicator Display (FID) is specified for split system equipment, or when an HSPF/HSPF2, SEER/SEER2, or EER/EER2 higher than the default is claimed. For dwelling units with multiple systems, the procedures shall be applied to each system separately.

The installer shall certify on the Certificate of Installation that the components required for compliance have been installed.

RA3.4.2 Fault Indicator Display (FID) Verification Procedure

The FID verification procedure shall consist of visual inspection to confirm that the FID is installed on the system, and that the manufacturer has certified to the Energy Commission that the FID model meets the applicable requirements of Reference Joint Appendix JA6. In addition, the space conditioning system shall comply with the procedures specified in Sections RA3.4.2.1, or RA3.4.2.2, or RA3.4.2.3.

RA3.4.2.1 Verification of installation of a FID with "self diagnostic reporting" functionality when outdoor air temperature is less than 55F

The space conditioning system installer shall use the weigh-in charging procedure in Section RA3.2.3.1 to comply with refrigerant charge requirements. HERS verification compliance for the refrigerant charge requirement shall be satisfied by visual inspection to confirm the system has a FID installed, and confirming the installed FID "self diagnostic reporting function" indicates FID sensors and internal processes are operating within the FID device's specified design parameters.

RA3.4.2.2 Verification of Installation of a FID that does not have "self diagnostic reporting" functionality when outdoor air temperature is less than 55F

The space conditioning system installer shall use the weigh-in charging procedure in Section RA3.2.3.1 to comply with the refrigerant charge requirements, and HERS verification compliance for the refrigerant charge requirement shall be delayed until a time when the outdoor air temperature is equal to or greater than 55F, at which time the procedure in RA3.4.2.3 shall be performed.

RA3.4.2.3 Verification of Installation of a FID when the outdoor air temperature is equal to or greater than 55F

When the outdoor air temperature is warmer than 55F, the space conditioning system installer shall use either the standard charge verification procedure specified in RA3.2.2, the weigh-in charging procedure specified in RA3.2.3.1, or an approved alternative procedure as specified in RA1, to comply with the refrigerant charge verification requirement. HERS verification compliance for the refrigerant charge requirement shall be validation of the FID installation when the outdoor air temperature is warm enough for the installed FID to perform a valid refrigerant charge test according to the FID manufacturer specification. The HERS Rater verification shall consist of operating the air conditioner in cooling mode for at least 15 minutes and performing a visual inspection to verify the FID reports the system is operating within acceptable parameters, or otherwise reports a system fault. If the FID reports that there is a system fault, the system does not comply with the refrigerant charge verification requirement.

RA3.4.3 Time Delay Relay Verification Procedure

When a system rating specification includes a time delay relay, the installation of the time delay relay shall be verified.

The procedure shall be:

(a) Turn the thermostat down until the compressor and indoor fan are both running.

(b) Turn the thermostat up so the compressor stops running.

(c) Verify that the indoor fan continues to run for at least 30 seconds.

RA3.4.4 HVAC System Verification Procedures

This section defines procedures for field verification of installed HVAC systems.

RA3.4.4.1 Rated Space Conditioning System Equipment Verification Procedure

When installation of specific matched system equipment is necessary for compliance with requirements for higher than minimum values for system HSPF/HSPF2, SEER/SEER2, or EER/EER2, the installed system equipment shall be verified according to the procedure specified in this section. The verification shall utilize certified rating data from the AHRI Directory of Certified Product Performance at http://www.ahridirectory.org or another directory of certified product performance ratings approved by the Energy Commission for determining compliance.

The procedure shall consist of visual verification of installation of the following system equipment components and confirmation that the installed equipment is rated to achieve the required HSPF/HSPF2, SEER/SEER2 or EER/EER2 rating:

(a) The manufacturer name and the model number of the outdoor unit or package unit.

(b) The manufacturer name and the model number of the inside coil if applicable.

(c) The name of the product directory used to certify the system performance.

(d) The certification number of the installed system if certification numbers for listed products are published by the product directory.

(e) The HSPF/HSPF2, SEER/SEER2 or EER/EER2 value published by the product directory.

(f) The manufacturer name and the model of the furnace or air handler when a specific furnace or air handler is necessary to achieve the SEER/SEER2, or EER/EER2 rating.

(g) The specified metering device when a specific refrigerant metering device (such as a TXV or an EXV) is necessary to achieve the high efficiency rating.

(h) When a system rating specification includes a time delay relay, the installation of the time delay relay shall be verified according to the procedure in Section 3.4.3.

RA3.4.4.2 Rated Heat Pump Capacity Verification Procedure

When heat pump systems are installed, and verification of the installed heat pump system capacity is required, the installed heat pump equipment shall be verified according to the procedure specified in this section. The verification shall utilize certified rating data from the

AHRI Directory of Certified Product Performance at http://www.ahridirectory.org or another directory of certified product performance ratings approved by the Energy Commission for determining compliance (product directory).

The procedure shall consist of visual verification of the model numbers of the installed system equipment and confirmation that the installed equipment is rated to provide the required heating capacity:

(a) Record the manufacturer name and the model number of the outdoor unit or package unit.

(b) Record the manufacturer name and the model number of the inside coil if applicable.

(c) Record the name of the product directory used to certify the system performance.

(d) Record the certification number of the installed system if certification numbers for listed products are published by the product directory.

(e) Record the system's rated heating capacity at 47 degrees F published by the product directory.

(f) Record the system's rated heating capacity at 17 degrees F if the value is published by the product directory.

If the installed system rated heating capacities at 47 degrees F and 17 degrees F are equal to or greater than the values specified on the Certificate of Compliance, the system complies. If the product directory does not publish capacity ratings at 17F, then compliance with capacity at 17F is not required.

RA3.4.4.3 Variable Capacity Heat Pump Performance Compliance Option Eligibility Verification

When a performance certificate of compliance indicates a space conditioning system requires verification of the variable capacity heat pump (VCHP) compliance option eligibility requirements, the installed VCHP system shall be field verified to confirm compliance with the eligibility requirements as specified in this subsection RA3.4.4.3.

If field verification determines the VCHP does not comply with all eligibility requirements in this section, then the dwelling in which the VCHP is installed shall not be eligible to claim the VCHP performance compliance credit for that space conditioning system.

Compliance with Section 150.0(m)11 (Duct System Sealing and Leakage Testing) is not required for systems that use this VCHP performance compliance option. However, there are requirements to verify that VCHP system indoor unit ducts are located entirely in conditioned space that are specified as eligibility requirements for this compliance option.

Compliance with Section 150.0(m)13 is not required for systems that use this VCHP performance compliance option. However there are requirements for verification of minimum airflow rates for VCHP system indoor units that are specified as eligibility requirements for this compliance option.

(a) **Low-static system certification for ducted systems.** The manufacturer of ducted indoor units shall certify to the Energy Commission that the system is a VCHP that meets the definition of a low-static system as defined in 10 CFR Parts 429 and 430, Docket No. EERE–2016–BT–TP–0029, Federal Register Vol. 82, No. 3, January 5, 2017). The manufacturer's model number(s) shall be included in listings of certified-to-the-Energy Commission low-static pressure VCHP systems which will be published on the Energy Commission's website.

If the installed VCHP system has ducted indoor units, then verification of the Energy Commission listings of certified VCHP systems shall confirm the installed system is included in the Energy Commission listings of certified low static systems.

If the VCHP model is not included in the Energy Commission listings of certified low static systems, then the system does not comply with the VCHP compliance option eligibility requirements.

(b) **Non-continuous default fan operation certification for ducted systems**. The manufacturer may elect to certify to the Energy Commission that their ducted indoor unit + outdoor unit combination does not operate the indoor unit fan continuously by default. This certification is required in order to receive credit for the non-continuous fan operation component of the VCHP compliance option credit.

If the installed VCHP system has ducted indoor units, and the certificate of compliance indicates credit has been taken for non-continuous default fan operation, then visual inspection of the Energy Commission listings of certified VCHP systems shall confirm the installed system is included in the Energy Commission listings and the certification indicates the system is a type with indoor units that does not run the fan continuously during periods when there is no call for conditioning.

If the model is not included in the Energy Commission listings of certified low static systems as a type with indoor units that does not run the fan continuously during periods when there is no call for conditioning, then the system does not comply with the VCHP compliance option eligibility requirements.

A revised certificate of compliance may be submitted to the enforcement agency that does not specify credit for non-continuous default fan operation.

(c) **Refrigerant charge verification**. The installed system shall have refrigerant charge verified in accordance with applicable procedures in RA3.2, as specified in Standards Sections 150.1(c)7A and 150.2(b)1Fii, or 150.2(b)1Fiii.

If the system does not meet the refrigerant charge verification requirements, then the system does not comply with the VCHP compliance option eligibility requirements.

(d) **Low leakage ducts located entirely in conditioned space verification**. Ducted indoor units shall be verified in accordance with the Verified Low Leakage Ducts in Conditioned Space procedure in Section RA3.1.4.3.8.

If the system does not meet the RA3.1.4.3.8 requirements, then the system does not comply with the VCHP compliance option eligibility requirements.

(e) **Ductless space conditioning system indoor units located entirely in conditioned space verification**. Ductless systems shall be verified in accordance with the ductless space conditioning system indoor units located entirely in conditioned space procedure in RA3.1.4.1.8 to visually confirm ductless indoor units are located entirely in conditioned space.

If the system is not considered to be entirely in conditioned space according to RA3.1.4.1.8 requirements, then the system does not comply with the VCHP compliance option eligibility requirements.

(f) **Space-Conditioning System Airflow Supply to All Habitable Spaces**. Field verification according to the procedure in RA3.1.4.1.7 shall confirm that airflow is supplied to all habitable spaces in a dwelling that specifies use of the VCHP compliance option.

If space conditioning system airflow is not supplied to all habitable spaces in the dwelling as determined by the procedure in RA3.1.4.1.7, then the system does not comply with the VCHP compliance option eligibility requirements.

(g) **Wall mounted thermostat in zones > 150 ft2**. Field verification according to the procedure in RA3.4.5 shall confirm that VCHP space conditioning zones in the dwelling that are greater than 150 ft2 are controlled by a permanently installed wall-mounted thermostat.

If a zone area served by an indoor unit is greater than 150 ft2, and the indoor unit is not controlled by a permanently installed wall-mounted thermostat located in the zone served by the indoor unit as determined according to the procedure in RA3.4.5, then the system does not comply with the VCHP compliance option eligibility requirements.

(h) **Non-continuous fan operation - field verification**. If non-continuous indoor unit fan operation is specified for improved compliance credit for ducted VCHP systems in the CBECC-Res model, and thus the certificate of compliance indicates field verification of non-continuous indoor unit fan operation is required, then the system shall be field verified in accordance with the procedures in RA3.4.6 to confirm that the installed system's indoor unit + outdoor unit combination does not operate the fan continuously when the system thermostat is not calling for conditioning.

If field verification according to RA3.4.6 determines the installed system's indoor unit + outdoor unit combination operates the fan continuously when the system thermostat is not calling for conditioning, then the system does not comply with the VCHP compliance option eligibility requirements.

A revised certificate of compliance may be submitted to the enforcement agency that does not specify credit for non-continuous default fan operation.

(i) **Minimum airflow rate verification**. Each new ducted indoor unit shall have airflow verified in accordance with the procedures in RA3.3 to confirm the airflow at full capacity in cooling mode is equal to or greater than 350 cfm/ton of nominal cooling capacity. 300 cfm/ton shall be verified for altered systems if required for compliance with the refrigerant charge verification procedure.

For indoor units of single-split systems, the measured value for airflow in cfm shall be converted into cfm per ton by dividing the measured indoor unit airflow rate by the nominal tons of outdoor unit cooling capacity.

For indoor units of multiple-split systems, the measured value for airflow in cfm shall be converted into cfm per ton by dividing the measured indoor unit airflow rate by the nominal tons of indoor unit cooling capacity.

If the indoor unit does not meet or exceed the 350 cfm/ton minimum airflow rate required for new systems, or the 300 cfm/ton required for altered systems meeting the refrigerant charge minimum airflow rate, then the system does not comply with the VCHP compliance option eligibility requirements.

(j) **Air filter sizing**. Ducted low-static VCHP indoor units with any length of duct shall have the air filters for the return air inlets verified to confirm the air filter sizing conforms to the procedures in i or ii below as applicable.

i. Nominal 2-inch or greater depth air filters shall be sized by the system designer to accommodate a maximum allowable clean-filter pressure drop of 0.1 inch wc at the air filter's design airflow rate. Field verification of the system designers sizing methodology shall not be required for nominal 2-inch or greater depth air filters, however verification that the installed 2-inch or greater depth air filter is rated to meet a clean filter pressure drop of less than or equal to 0.1 inch wc at the air filter's design airflow rate shall conform to the procedures in RA3.1.4.8.

If any of the indoor unit's applicable nominal 2-inch or greater depth air filters fails to meet the maximum 0.1 inch wc. clean filter pressure drop requirement as verified according to the procedure in RA3.1.4.8, then the system does not comply with the VCHP compliance option eligibility requirements.

ii. Nominal one-inch minimum depth air filters shall be allowed if the filter face area is sized based on a maximum face velocity of 150 ft. per minute at the air filter design airflow rate according to the procedures in RA3.1.4.7.

All of the indoor unit air filters that are required to be sized and verified according to a face velocity specification shall comply with this subsection ii. If any of the indoor unit's applicable nominal 1-inch depth air filters has a face area less than the required face area determined according to the procedures in RA3.1.4.7, then the system does not comply with the VCHP compliance option eligibility requirements.

(k) **Air filter maximum pressure drop**. Ducted low-static VCHP indoor units with any length of duct shall have the air filters for the return air inlets verified according to the procedures in RA3.1.4.8 to confirm the air filter is rated to provide a clean filter pressure drop less than or equal to 0.1 inch wc., at an airflow rate greater than or equal to the air filter's design airflow rate.

If verification of the indoor unit's air filters according to the procedures in RA3.1.4.8 determines that one or more of the air filters does not provide clean filter pressure drop less than or equal to 0.1 inch wc., at an airflow rate greater than or equal to the air filter's

design airflow rate, then the system does not comply with the VCHP compliance option eligibility requirements.

RA3.4.5 Verification of Wall-Mounted Thermostat

When compliance requires verification that a wall-mounted thermostat has been installed to control a space conditioning system's indoor unit operation, the system's indoor unit thermostat(s) shall be verified according to the following procedures. If a system has more than one indoor unit, then all of the system's indoor unit thermostats shall be verified according to this procedure.

(a) If the conditioned floor area (ft2) of the zone served by an indoor unit is not a criterion for determining the compliance requirement for wall-mounted thermostats, then skip to subsection (b) below.

Otherwise, if the conditioned floor area (ft2) of the zone served by an indoor unit is a criterion for determining the compliance requirements for wall-mounted thermostats in the zone, then record the value in square feet for conditioned floor area served by the indoor unit.

i. If the zone area size (ft2) criterion indicates that a wall-mounted thermostat is not required for the zone, then the indoor unit complies and no further thermostat verification is required for the zone served by the indoor unit.

ii. If the zone area size (ft2) criterion indicates that a wall-mounted thermostat is required for the zone, then perform the remaining steps (b) and (c).

(b) If possible, locate the wall-mounted thermostat that controls the indoor unit, and verify whether or not the thermostat controls the indoor unit by setting the thermostat to a cooling setpoint that is less than the room temperature, or alternatively by setting the thermostat to a heating setpoint that is greater than the room temperature.

If there is no wall-mounted thermostat installed in the zone that controls the indoor unit, then the indoor unit does not comply.

If there is a wall-mounted thermostat installed that controls the indoor unit, but it is not located within the zone served by the indoor unit, then the indoor unit does not comply.

(c) For a wall-mounted thermostat installed in the zone that controls the indoor unit located in step (b), by visual inspection determine if the thermostat is mounted permanently to the wall. Wall-mounted brackets or other means that facilitate non-permanent attachment of handheld thermostats to the wall do not meet this requirement.

If the thermostat is not permanently mounted to the wall, then the indoor unit does not comply.

RA3.4.6 Verification of Non-Continuous Indoor Unit Fan Operation

When compliance requires field verification that an installed space conditioning system indoor unit does not operate the air distribution fan during periods when the space does not require

heating or cooling, the system's indoor unit operation shall be field verified according to the following procedures. If a system has more than one indoor unit, then all of the system's applicable indoor units shall be verified according to this procedure.

(a) If possible, locate the manufacturer's indoor unit + outdoor unit combination in the Energy Commission listing of systems that have been certified by the manufacturer as systems that do not operate the air distribution fan during periods when the space does not require heating or cooling, which is located at: https://www.energy.ca.gov/rules-and-regulations/building-energy-efficiency/manufacturer-certification-building-equipment.

    Record the result of the search for the system model(s). If the manufacturer's indoor unit + outdoor unit combination is not included in the CEC listing, then the indoor unit does not comply.

(b) Switch the system to heating mode.

(c) Switch on the heating system by setting the thermostat to a setpoint that is greater than the room temperature.

(d) Verify the thermostat activates the indoor unit airflow.

(e) Switch off the heating system by setting the thermostat to a setpoint that is less than the room temperature.

(f) Verify the indoor unit air circulation fan does not operate when the compressor is off, except for a fan overrun (fan off delay) of less than 10 minutes that may occur at the end of the compressor on cycle.

(g) Switch the system to cooling mode.

(h) Switch on the cooling system by setting the thermostat to a setpoint that is less than the room temperature.

(i) Verify the thermostat activates the indoor unit airflow.

(j) Switch off the cooling system by setting the thermostat to a setpoint that is greater than the room temperature.

(k) Verify the indoor unit air circulation fan does not operate the indoor fan when the compressor is off, except for a fan overrun (fan off delay) of less than 10 minutes that may occur at the end of the compressor on cycle.

If the system does not operate the indoor unit air distribution fan(s) during periods when the spaces served by the system do not require heating or cooling to meet the thermostat setpoint, then the system complies.

RA3.5 Quality Insulation Installation Procedures

RA3.5.1 Purpose and Scope

RA3.5 is a procedure for verifying the quality of insulation installation and air leakage control used in low-rise residential buildings. This procedure is to be followed by the insulation installer and a qualified Home Energy Rating System (HERS) rater must verify its conformance for meeting the requirements of Sections 150.1(c), and 110.7of the Standards.

The procedure applies to wood and metal construction of framed and non-framed envelope assemblies. Framed assemblies include wall stud cavities, roof/ceiling assemblies, and floors typically insulated with: (1) batts of mineral fiber and mineral wool; (2) loose-fill materials of mineral fiber, mineral wool, and cellulose; (3) spray polyurethane foam; and, (4) rigid board sheathing materials. Non-framed assemblies include wall, roof/ceiling, and floors constructed of structural insulated panels and insulated concrete forms.

Note 1: For newly constructed buildings, this procedure applies to the entire thermal envelope of the building. In many instances, residential homes will use several types of insulation material, even in the same framed assembly. Each insulation material and the integrity of air leakage control for the building's entire thermal envelope must be verified by the HERS rater for the home to comply with the Standards.

Note 2: Structural bracing, tie-downs, and framing of steel or specialized framing used to meet structural requirements of the California Building Code (CBC) are allowed. These areas shall be called out on the building plans with diagrams and/or specific design drawings indicating the R-value amount and fastening method to be used. All structural framing areas shall be insulated in a manner that resists thermal bridging from the outside to the inside of the assembly separating conditioned from unconditioned space. The insulation and air barrier integrity shall be verified by the HERS rater.

RA3.5.2 Definitions

Continuous Air Barrier	A combination of interconnected materials and assemblies joined and sealed together to provide a continuous barrier to air leakage through the building envelope separating conditioned from unconditioned space, or adjoining conditioned spaces of different occupancies or uses. An air barrier is required in all thermal envelope assemblies to limit air movement between unconditioned/outside spaces and conditioned/inside spaces and must meet one of the following: 1. Using individual materials that have an air permeance not exceeding 0.004 cfm/ft^2 under a pressure differential of 0.3 in. w.g. (1.57 psf) (0.02 L/s.m^2 at 75 pa) when tested in accordance with ASTM E2178; or 2. Using assemblies of materials and components that have an average air leakage not to exceed 0.04 cfm/ft^2 under a pressure differential of 0.3 in.

	w.g (1.57 psf) (0.2 L/s.m^2 at 75 pa) when tested in accordance with ASTM E2357, ASTM E1677, ASTM E1680 or ASTM E283; or 3. Testing the completed building and demonstrating that the air leakage rate of the building envelope does not exceed 0.40 cfm/ft^2 at a pressure differential of 0.3 in w.g. (1.57 psf) (2.0 L/s.m^2 at 75 pa) in accordance with ASTM E779 or an equivalent approved method. Individual materials and assemblies of materials that can demonstrate compliance with the air barrier testing requirements must be installed according to the manufacturer's instructions and a HERS rater shall verify the integrity of the installation. Below are example materials meeting the air permeance testing performance levels of 1 above. Manufacturers of these and other product types must provide a specification or product data sheet showing compliance to the ASTM testing requirements to be considered as an air barrier. -- Plywood – minimum 3/8 inch -- Oriented strand board – minimum 3/8 inches -- Extruded polystyrene insulation board – minimum ½ inch -- Foil-back polyisocyanurate insulation board – minimum ½ inch -- Extruded polystyrene insulation board – minimum ½ inch -- Foil backed urethane foam insulation (1 inch) -- Closed cell spray polyurethane foam with a minimum density of 2.0 pcf and a minimum thickness of 2.0 inches -- Open cell spray polyurethane foam with a minimum density of 0.4 to1.5 pcf and a minimum thickness of 5½ inches -- Exterior or interior gypsum board - minimum 1/2 inch -- Cement board - minimum 1/2 inch -- Built up roofing membrane -- Modified bituminous roof membrane -- Particleboard - minimum1/2 inch -- Fully adhered single-ply roof membrane -- Portland cement/sand parge, or gypsum plaster minimum 5/8 inch -- Cast-in-place and precast concrete -- Fully grouted uninsulated and insulated concrete block masonry -- Sheet steel or aluminum

Air-tight	Limiting the passage of air either in or out of the building envelope. Note: Thermal envelope assemblies (such as wall assemblies) shall be built to minimize air movement. Air movement brings unconditioned air and moisture through or into the assembly. For these procedures, air-tight shall be defined as an assembly or air barrier with all openings caulked, or sealed with minimally expansive foam, or taping/sealing of adjoining surfaces of air barrier materials and assemblies.
Compression	The improper placement of insulation in an assembly that results in an installation less than the product's nominal thickness. Batt insulation should be “lofted” and loose-fill and spray foam material properly field applied to the manufacturer’s specified density to achieve its full R-value. Limited compression is allowed at plumbing, vents, and other obstructions and in cavities of non-standard framing. Compression of insulation in these situations is limited to no more than 30% of its' nominal thickness.
Delaminated	Separation of the insulation's full thickness to facilitate it's installation around or between obstructions. Batt and blanket insulation are often split or delaminated to fit around electrical wires and plumbing runs through a wall cavity to prevent voids, or compression of the insulation. The delamination must ensure that the full thickness of the insulation is installed between the obstruction and the finish material covering the framing. For example, an electrical wire located one-third of the distance from the front of the cavity should have batt insulation delaminated so that two-thirds of the batt is installed towards the outside wall surface and one-third is installed towards the inside wall surface from the wire.
Draft Stops	A material, device or construction installed to prevent the movement of air within open spaces of concealed areas of building components, such as crawl spaces, floor/ceiling assemblies, wall assemblies, roof/ceiling assemblies and attics. Note: Draft stops are important components of the air barrier and shall be air-tight. Fire blocks constructed of porous insulation materials cannot serve as draft stops since they are not air tight.
Friction Fit	A means of installing insulation within the framed cavity without the use of mechanical fasteners such that the material's full thickness in all directions is sufficient to keep the material in its intended position. In standard framing dimensions of 2x4 and 2x6 @ 16" oc and 24" oc batt and blanket insulation materials have enough side-to-side frictional force to hold the insulation in place without any other means of attachment. Note: Friction fitting of faced batt and blanket insulation, with or without an attachment flange, is allowed provided the insulation's installation integrity can be maintained.

Gaps	Uninsulated areas at the edge of insulation where insulation is not in contact with framing members or other materials at the edge of the insulation. Gaps occur when insulation length and width is too short for the cavity. Gaps in insulation are avoidable and are not permitted.
Hard Covers	Building materials, such as plywood or gypboard, which become part of the ceiling air barrier. Note: Hard covers shall be installed above areas where there is a drop ceiling. For example, a home with 10 ft ceilings may have an entry closet with a ceiling lowered to 8 ft. In this case, a hard cover is installed at the 10 ft level above the entry closet. Hard covers become part of the ceiling air barrier and shall be air-tight.
Inset Stapling	A method of attaching faced batt or blanket insulation to wood framing, where the flange of the insulation facing is pushed inside the face of the framing member and stapled. This method causes a void between the insulation and the air barrier. In windy areas installers often staple the flanges of faced batts to the sides of the stud to assure that the insulation remains in place until covered with drywall, particularly on the wall between the house and the garage where there isn't any exterior sheathing to help keep the insulation in place. The void created by the flange inset shall not extend more than two inches from the stud on each side.
Insulation Types--Framed Assemblies	There are four basic types of insulation, or insulation "systems", installed in residential buildings and their use varies based on the design and type of construction: 1. **Batt and Blanket**: Batt and blanket insulation is made of mineral fiber and mineral wool -- either processed fiberglass, rock or slag wool -- and is used to insulate below floors, above ceilings, below roofs, and within walls. 2. **Loose-fill**: Loose-fill insulation includes loose fibers or fiber pellets that are blown into building cavities or attics using special equipment. Loose-fill insulations typically are produced using mineral fiber, mineral wool, or cellulose. They are installed in walls, floors, attics and below roofs using a dry-pack process or a moist-spray technique, and may include a netting material. 3. **Rigid Board**: Rigid board insulation sheathing is made from fiberglass, expanded polystyrene (EPS), extruded polystyrene (XPS), polyisocyanurate (PIR), or polyurethane (PUR). This type of insulation is used for above roof decks, exterior walls, cathedral ceilings, basement walls, as perimeter insulation at concrete slab edges, and to insulate special framing situations such as window and door headers, and around metal seismic bracing. Rigid board insulation may also be integral to exterior siding materials. 4. **Spray Polyurethane Foam (SPF)**: A two-part liquid foamed plastic (such as polyurethane or modified urethane) material formed by the reaction of

	an isocyanurate and a polyol that uses a blowing agent to develop a cellular structure when spray applied onto a substrate. SPF insulation is a two-component reactive system mixed at a spray gun or a single-component system that cures by exposure to humidity. The liquid is sprayed through a nozzle into wall, roof/ceiling, and floor cavities. SPF insulation can be formulated to have specific physical properties (i.e., density, compressive strength, fire resistance and R-value). There are two types of SPF insulation: a. *Low Density Open-Cell SPF (ocSPF) Insulation*: A spray applied polyurethane foam insulation having an open cellular structure resulting in an installed nominal density of 0.4 to 1.5 pounds per cubic foot (pcf). b. *Medium Density Closed-Cell SPF (ccSPF) Insulation*: A spray applied polyurethane foam insulation having a closed cellular structure resulting in an installed nominal density of greater than 1.5 to less than 2.5 pounds per cubic foot (pcf).
Insulation Types--Non-framed Assemblies	There are two basic types of insulation used and their use varies based on the design and type of construction: 1. **Structural Insulated Panel (SIP):** A composite building material consisting of an insulating layer of rigid polymer foam sandwiched between two layers of structural board. The board can be sheet metal, plywood, cement or oriented strand board (OSB) and the foam is either expanded polystyrene foam (EPS), extruded polystyrene foam (XPS) or polyurethane (PUR) foam. SIPs combine several components of conventional building, such as studs and joists, insulation, vapor barrier and air barrier. They can be used for many different applications, such as exterior walls, roofs, floors, and foundation systems. 2. **Insulated Concrete Form (ICF):** A system of formwork for concrete that stays in place as permanent building insulation and is used for cast-in-place, reinforced above and below-grade concrete walls, floors, and roofs. ICFs are interlocking modular units that can be dry-stacked (without mortar) and filled with concrete as a single concrete masonry unit (CMU). ICFs lock together externally and have internal metal or plastic ties to hold the outer layer(s) of insulation to create a concrete form for the structural walls, roof/ceilings, or floors of a building. ICFs are manufactured from several materials including: expanded and extruded polystyrene foam, polyurethane foam, cement-bonded wood fiber, and cement-bonded polystyrene beads.
Minimally Expansive Foam Sealing Material	A single-component polyurethane foam system typically formulated in a handheld can or portable container to seal and fill construction gaps and crevasses, holes, and cracks without distorting adjacent framing. These

	materials are not used for insulation purposes, rather as agents for air sealing of gaps and crevasses that are too small to be insulated.
Net Free-Area	The net free-area of a vent cover is equal to the total vent opening less the interference to airflow caused by a screen or louver used for ventilation. Screened or louvered vent opening covers are typically marked by the manufacturer with the "net free-area." For example a 22.5 in. by 3.5 in. eave vent screen with a total area of 78.75 square inches may have a net free-area of only 45 square inches.
Non-Standard Framing	Standard framing consists of installation of framing members spaced at regular intervals (16" or 24" on center), where batt insulation products can be installed to the full dimensional width of the cavity between framing members. Non-Standard framing may include multiple framing members, framing members at unusual spacing, additional blocking within cavity, structural columns or beams, or metal structural connections that alter the cavity depth or width.
Voids & Air Spaces	An uninsulated space within an enclosed building assembly created where the assembly has been insulated by partial filling of the framed cavity. The partial fill results in an air space (void) between the insulation surface and the assembly's exterior or interior layers which form the assembly's air barrier.

RA3.5.3 BATT AND BLANKET INSULATION

These procedures detail the installation and inspection protocols necessary to qualify for Quality Insulation Installation (QII) of batt and blanket insulation. These procedures must be field verified before the building construction permit is finalized.

These procedures are to be followed by the insulation installer and a qualified Home Energy Rating System (HERS) rater must verify its conformance to meet the requirements of Sections 150.1(c)1E or 170.2(a)6, and 110.7 of the Standards.

RA3.5.3.1 Thermal Specification

This insulation type is manufactured in different widths, lengths, and thicknesses and is available with or without a facing. Faced batts and blanket insulation material are also available with or without an attachment flange. Specific product R-values are readily available from the manufacturer for the specific materials being installed and the R-value of the product is marked on the face of the product (faced or unfaced material). The installed insulation must meet the R-value stated on the compliance documentation.

RA3.5.3.1.1 Requirements for Walls, Roof/Ceilings and Floors

(a) Materials shall comply with, and be installed in conformance with, all applicable building codes for building. California Building Code (including, but not limited to, California Electric Code Section 719) and installed to meet all applicable fire codes.

(b) Materials shall meet California Quality Standards for Insulating Material, Title 24, Part 12, Chapter 4, Article 3, listed in the California Department of Consumer Affairs Consumer Guide and Directory of Certified Insulating Materials.

(c) Materials shall comply with flame spread rating and smoke density requirements of Chapter 26 and Section 706 of the Title 24, Part 2: all installations with exposed facings must use fire retardant facings which have been tested and certified not to exceed a flame spread index (FSI) of 25 and a smoke development index (SDI) of 450. Insulation facings that do not touch a ceiling, wall, or floor surface, and faced batts on the undersides of roofs with an air space between the ceiling and facing are considered exposed applications.

(d) Materials shall be installed according to manufacturer specifications and instructions.

(e) Batt and blanket insulation shall be correctly sized to fit snugly at the sides and ends.

(f) Batt and blanket insulation shall be installed so that they will be in contact with the air barrier.

(g) Where necessary, batt and blanket insulation shall be cut to fit properly - there shall be no gaps, nor shall the insulation be doubled-over or compressed.

(h) When batt and blanket insulation are cut to fit a non-standard cavity, they shall be snuggly fitted to fill the cavity without compression.

(i) Batt and blanket insulation shall be cut to butt-fit around wiring and plumbing, or be split (delaminated) so that one layer can fit behind the wiring or plumbing, and one layer fit in front.

RA3.5.3.1.2 R-value Measurement Equipment

The HERS rater shall verify the installed thickness of insulation in all assemblies and locations on walls, roof/ceilings, and floors, and to ensure that insulation levels and installation integrity meet the R-value specified on the Certificate of Compliance, and all other required compliance documentation.

RA3.5.3.1.3 Certificates

All provisions of Residential Appendix RA2 shall be met. All Insulation Certificates of Installation signed by the insulation installer shall be provided stating the installation is consistent with the Certificate of Compliance, plans and specifications for which the building permit was issued. The insulation installer shall complete all applicable sections of the Certificate of Installation form and attach a product specification or data sheet for every insulation material used.

RA3.5.3.1.4 Certificates and Availability

All provisions of Residential Appendix RA2 shall be met. The Insulation Certificate of Installation, with insulation material labels or specification/data sheets attached, signed by the insulation installer, shall be available on the building site for each of the HERS rater's verification inspections. Note: The HERS rater cannot verify compliance credit without these completed forms.

RA3.5.3.2 Wall Insulation

(a) Wall stud cavities shall be caulked, foamed or otherwise sealed to provide a substantially air-tight envelope to the outdoors, attic, garage and crawl space. All plumbing and wiring penetrations through the top and bottom plates and electrical boxes that penetrate the sheathing shall be sealed. All gaps in the air barrier shall be caulked, taped, or sealed with minimally expansive foam.

(b) Bottom plates of framed and non-framed assemblies shall be sealed to the ground subfloor or slab, and above ground subfloor.

(c) Insulation shall uniformly fill the cavity side-to-side, top-to-bottom, and front-to-back.

(d) Batt insulation shall fill the cavity by friction fitting, inset or face stapling of flanges of faced batts, or by other support methods as necessary.

(e) Batt and blanket insulation shall be installed to fill the cavity and be in contact with the sheathing on the back and the wallboard on the front - no gaps or voids.

Exception to RA3.5.3.2(e): Batt insulation with flanges that are inset stapled to the side of the stud, the surface of the batt facing the occupied space must be flush with the face of the cavity (or protrude beyond) except for the portions of the batt that are less than two inches from the side of the stud.

(f) When batt and blanket insulation are cut to fit a non-standard framing, they shall be snuggly fitted to fill the cavity with limited compression.

(g) Batt insulation shall be cut to butt-fit around wiring and plumbing, or be split (delaminated) so that one layer can be fit behind the wiring or plumbing, and one layer fit in front. The layers must be proportional to the obstruction's position in the cavity to avoid compression and voids.

RA3.5.3.2.1 Narrow-Framed Cavities

(a) Non-standard width cavities shall be filled with insulation to snuggly fit into the space, or with minimally expansive foam sealing material.

(b) Narrow spaces less than 1 inch in width at windows and door jambs, shall be filled with minimally expansive foam sealing. In cases where the manufacturer's warranty would be void if minimally expansive foam is used to seal the gap between the window frame or door jamb, the cavity must be airtight and batt insulation cut to width and snuggly fitted (with limited compression) in the space.

(c) Narrow spaces less than 2 inches in width, such as between studs at building corners, and at the intersection of interior partition walls to exterior walls, shall be filled with insulation snuggly fitted in the space, or with minimally expansive foam sealing.

RA3.5.3.2.2 Special Situations--Installation Prior to Exterior Sheathing or Lath

(a) Hard to access wall stud cavities, such as corner channels, wall intersections, and behind tub/shower enclosures shall be insulated to the proper R-value. In most cases this can only be completed prior to the installation of the tub/shower enclosure, the exterior sheathing, or the exterior stucco lath.

(b) An air barrier shall be installed on the inside of the exterior wall(s) directly adjacent to the tub/shower enclosure.

RA3.5.3.2.3 Special Situations--Obstructions

(a) Insulation shall be delaminated or cut to fit around wiring, plumbing, vents, and other obstructions with limited compression. Compression of insulation in these situations is limited to ≤ 30% of its nominal thickness.

(b) Insulation shall be placed between the sheathing and the rear of electrical boxes and other obstructions that are not as deep as the cavity (i.e. communications boxes, medicine cabinets).

(c) In cold climates, where water pipes may freeze (such as Climate Zones 2, 11-14 and 16) pipes shall have at least 1/2 of the insulation between the water pipe and towards the outside surface of the exterior wall. As much insulation as possible shall be placed between the pipe and the outside (without compression), and remaining insulation shall be placed between the pipe and the interior assembly material.

RA3.5.3.2.4 Special Situations--Rim Joists

(a) All rim-joists shall be insulated to the same R-value as the adjacent walls.

(b) The insulation shall be installed without gaps, voids, or compression.

RA3.5.3.2.5 Special Situations--Kneewalls and Skylight Shafts

(a) Framing for kneewalls and skylight shafts that separate conditioned from unconditioned space shall be insulated to meet or exceed the wall R-value specified on the Certificate of Compliance, and all other required compliance documentation.

(b) The insulation shall be installed without gaps or compression.

(c) Steel-framed kneewalls and skylight shafts, external surfaces of steel studs shall meet or exceed the mandatory minimum insulation requirements and be covered with continuous insulation unless otherwise specified on the Certificate of Compliance using correct U-factors from Joint Appendix JA4, Table 4.3.4 (or U-factors approved by the Commission Executive Director).

(d) The backside of air permeable insulation exposed to the unconditioned attic space shall be completely covered with a continuous air barrier.

(e) The house side of the insulation shall be in contact with the drywall or other wall finish.

(f) The insulation shall be supported so that it will not fall down by either friction fitting to the framing, inset or face stapling of flanges, or using other support such as netting.

(g) Insulation for all kneewall and skylight shafts shall be completely enclosed by vertical and horizontal framing, including horizontal plates at top and bottom of the insulation.

RA3.5.3.2.6 Special Situations--HVAC/Plumbing Closet

Walls of interior closets for HVAC and/or water heating equipment, which require combustion air venting, shall be insulated to at least the same R-value as other demising walls (i.e., walls separating conditioned space and attached garage), or as specified on the Certificate of Compliance.

RA3.5.3.2.7 Special Situations--Double Walls and Framed Bump-Outs

(a) Insulation shall fill the entire cavity; or, an additional air barrier shall be installed inside the double wall or bump-out and in contact with the insulation so that the insulation fills the cavity formed with the additional air barrier.

(b) Entire double walls and framed bump-outs shall be air-tight.

RA3.5.3.2.8 Special Situations--Structural Bracing, Tie-downs, Steel Structural Framing

(a) Framing and bracing used for structural purposes shall be identified on plan documents with diagrams and/or design drawings.

(b) Insulation shall be installed in a manner that minimizes heat loss/gain due to thermal bridging through the structural framing assembly.

(c) Insulation shall be applied to fully enclose and/or adhere to all sides and ends of structural assembly framing that separate conditioned from unconditioned space.

(d) The structural portions of assemblies shall be air-tight.

RA3.5.3.2.9 Special Situations--Window and Door Headers

(a) All single-member window and door headers shall be insulated to a minimum of R-3 for a 2x4 framing, or equivalent width, and a minimum of R-5 for all other assemblies. Insulation is to be placed between the interior face of the header and inside surface of the interior wall finish.

(b) No header insulation is required for single-member headers that are the same width as the wall, provided that the entire wall has at least R-2 insulation.

RA3.5.3.2.10 Special Situations--Gable Ends in Unvented Attics

(a) In unvented attics, where insulation is applied directly to the underside of the roof deck, framing for gable ends that separate the unvented attic from the exterior or unconditioned

space shall be insulated to meet or exceed the wall R-value of the adjacent exterior wall construction as specified on the Certificate of Compliance.

(b) The backside of air permeable insulation exposed to the unconditioned attic space shall be completely covered with a continuous air barrier.

RA3.5.3.3 Roof/Ceilings

(a) Batt and blanket insulation shall be correctly sized to fit snugly at the sides and ends.

(b) Batt and blanket insulation shall be installed to be in contact with the air barrier.

(c) Where necessary, batt and blanket insulation shall be cut to fit properly - there shall be no gaps, nor shall the insulation be doubled-over or compressed.

(d) When batt and blanket insulation are cut to fit a non-standard cavity, they shall be snuggly fitted to fill the cavity with limited compression.

(e) Batt and blanket insulation shall be cut to butt-fit around wiring and plumbing, or be split (delaminated) so that one layer can fit behind the wiring or plumbing, and one layer fit in front.

(f) Batt and blanket insulation that is thicker than the framing depth shall be installed so that the insulation expands to touch adjacent insulation over each framing member.

(g) Hard covers or draft stops shall be placed over all drop ceiling areas and interior wall cavities to keep insulation in place and stop air movement. If hard covers or draft stops are missing or incomplete, they shall be completed before insulation is installed.

(h) Baffles shall be placed at eaves or soffit vents of vented attics to keep insulation from blocking eave ventilation and prevent air movement under the insulation. The required net free-ventilation shall be maintained.

(i) All recessed light fixtures that penetrate the ceiling shall be listed for zero clearance insulation contact (IC), have a label that certifies it as airtight with leakage less than 2.0 cfm @ 75 Pa when tested to ASTM E283, and shall be sealed with a gasket or caulk between the light's housing and the ceiling.

(j) Insulation shall cover all recessed lighting fixtures. Fixtures that are not rated for insulation contact (IC), and air-tight, shall be removed and/or replaced.

(k) Facings and insulation shall be kept away from combustion appliance flues in accordance with flue manufacturer's installation instructions or labels on the flue.

RA3.5.3.3.1 Special Situations--Enclosed Rafter Ceilings

(a) In vented rafter ceilings, an air space shall be maintained between the insulation and roof sheathing as specified by California Building Code, Sections 1203.2 and R806.3, or as specified by the local building department.

(b) Insulation installed in unvented rafter ceilings or to the underside of unvented roofs with an attic below shall have an R-value conforming to compliance documentation and the air

barrier shall be uniform across the transition of roof to wall. The insulation shall be in contact with the air barrier.

RA3.5.3.3.2 RESERVED

RA3.5.3.3.3 Special Situations--HVAC Platform

(a) Batt and blanket insulation shall be placed below all platforms or cat-walks used for HVAC equipment installation and access.

(b) Batt and blanket insulation shall be installed so that they will be in contact with the air barrier.

(c) Batt and blanket insulation shall be installed under HVAC platform to the full depth and rated R-value as specified on the Certificate of Compliance, without gaps or compression. If necessary, HVAC platform shall be raised to accommodate ceiling insulation.

RA3.5.3.3.4 Special Situations--Attic Access

Permanently attach rigid board insulation or batt or blanket insulation with the appropriate R-value to the access door using adhesive or mechanical fastener. The bottom of the attic access shall be gasketed to prevent air leakage of conditioned air to the unconditioned attic.

RA3.5.3.3.5 Special Situations--Below Roof Deck Insulation (Vented and Unvented Attics)

(a) Below roof deck insulation consisting of batts that nominally fill the cavity space between roof framing members shall be stapled, or supported with cabling, tension rods, or other support measures which maintain the batt uniformly against the roof deck with limited compression. Batts with facing directed to the attic space shall be face stapled. Inset stapling of underside batts is not allowed. Batts supported with cabling, tensions rods, or other methods supporting the batt from below shall be supported at intervals less than or equal to 16", and no further than 8" from the end of the batt. Batts that are directly stapled through the insulation material to the roof deck should maintain the batt uniformly against the roof deck with limited compression.

(b) When the batt thickness nominally exceeds the depth of the roof framing members, full-width batts must be used and the batt shall be secured as described in (a). Full depth insulation coverage at the bottom of the roof framing member is not required as part of the QII inspection process.

(c) For vented attics, below deck batt or blanket insulation shall be installed in a manner that does not obstruct eave, ridge, or eyebrow vents to allow for adequate attic ventilation. The required net free ventilation area of all eave and roof vents shall be maintained. Eave vent baffles shall be installed to prevent air movement under or into the batt.

RA3.5.3.3.6 RESERVED

RA3.5.3.4 Raised Floors

(a) Batt and blanket insulation shall be correctly sized to fit snugly at the sides and ends.

(b) Batt and blanket insulation shall be cut to fit properly without gaps. Insulation shall not be doubled-over or compressed.

(c) Batt and blanket insulation shall be in contact with the air barrier - usually the subfloor.

RA3.5.3.4.1 Homes with Floors Over Garage

(a) Batt and blanket insulation shall be correctly sized to fit snugly at the sides and ends, but not be so large as to buckle.

(b) Batt and blanket insulation shall be cut to fit properly without gaps. Insulation shall not be doubled-over or compressed.

(c) Batt and blanket insulation shall be in contact with the air barrier - usually the subfloor.

(d) On floors that are over garages, or where there is an air space between the insulation and the subfloor, the rim joist shall be insulated.

(e) Batt and blanket insulation shall be cut to butt-fit around wiring and plumbing, or be split (delaminated) so that one layer can fit behind the wiring or plumbing, and one layer fit in front.

(f) Faced batts or blankets shall be placed toward the living space and be in contact with the underside of the floor sheathing. Continuous support shall be provided to keep the facing in contact with the floor sheathing. The insulation shall be properly supported by stapling of flanges, netting or other method approved by the manufacturer for the product.

(g) Batt and blanket insulation shall be properly supported to avoid gaps, voids, and compression.

RA3.5.3.4.2 Homes with Conditioned Space Over Garage

The separation between conditioned space (house) and the garage shall be insulated to create a continuous thermal barrier. All rim and band joists adjoining conditioned space shall be air tight and insulated.

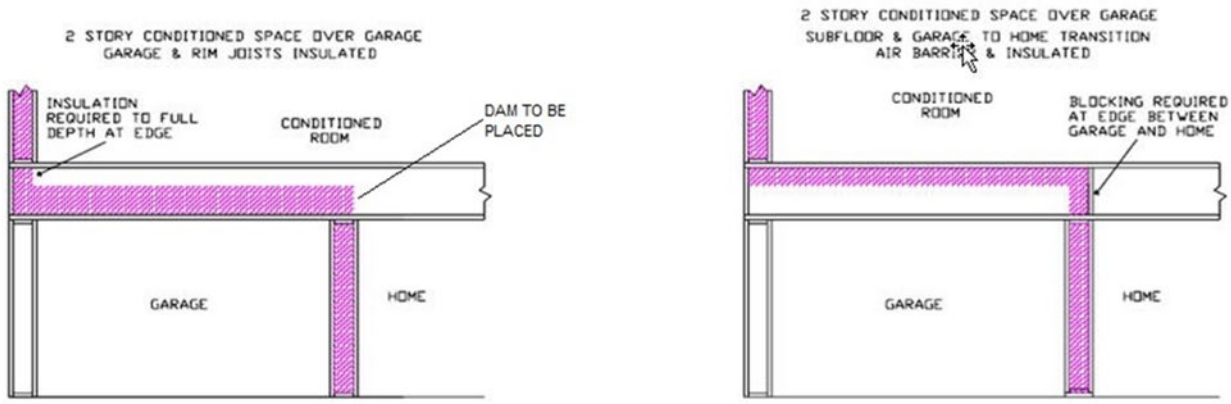

Figure RA3.5-1 Homes with Conditioned Space Over Garage – Batt and Blanket Insulation

RA3.5.3.4.3 Homes with No Conditioned Space Over Garage

The band joist where the garage transitions to an attic above conditioned space shall have an air barrier installed in contact with the edge of the attic insulation.

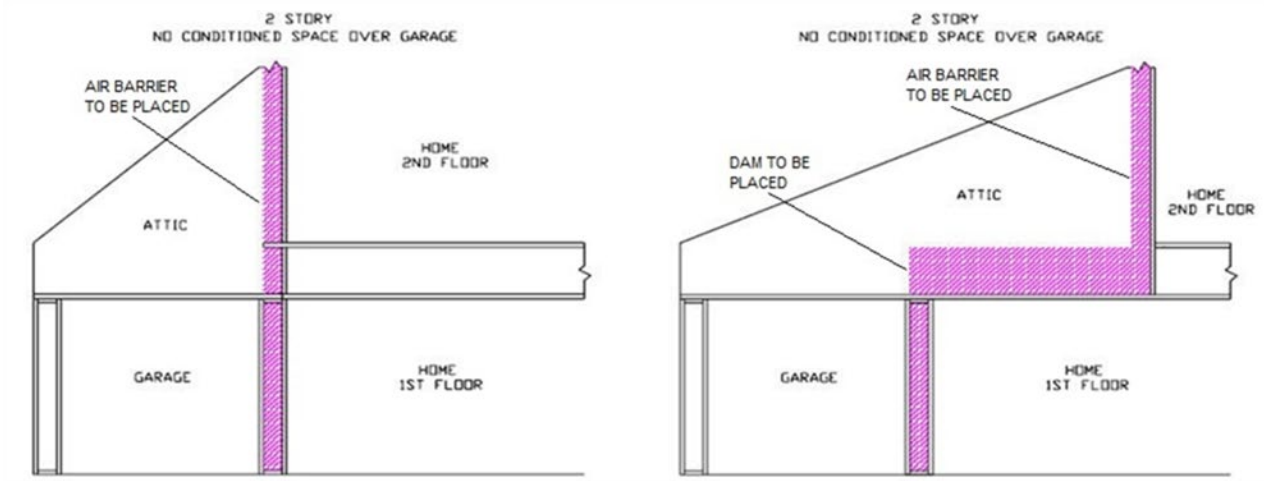

Figure RA3.5-2 Homes with No Conditioned Space Over Garage – Batt and Blanket Insulation

RA3.5.4 LOOSE FILL INSULATION

These procedures detail the installation and inspection protocols necessary to qualify for Quality Insulation Installation (QII) of loose-fill insulation. These procedures must be field verified before the building construction permit is finalized.

These procedures are to be followed by the insulation installer and a qualified Home Energy System (HERS) rater must verify conformance to meet the requirements of Sections 150.1(c)1E or 170.2(a)6, and 110.7 of the Standards.

RA3.5.4.1 Thermal Specification

This insulation type is manufactured to be blown or sprayed into framed cavity walls, floors, and ceilings. It is installed with or without a net depending on the loose-fill type or in special installations where netting is required, such as below a roof deck or under floors. Its overall R-value is dependent on the installed density and installed thickness. Specific product R-values are readily available from the manufacturer for the specific materials being installed. R-value and coverage chart of the product is typically marked on the bag which the insulation was drawn from and from the manufacturer's product data sheet or product specification information. The installed insulation must meet the R-value stated on the compliance documentation.

RA3.5.4.1.1 Requirements for Walls, Roof/Ceilings and Floors

(a) Materials shall comply with, and be installed in conformance with, all applicable building codes for building. California Building Code (including, but not limited to, California Electric Code Section 719) and installed to meet all applicable fire codes.

(b) Materials shall meet California Quality Standards for Insulating Material, Title 24, Part 12, Chapter 4, Article 3, listed in the California Department of Consumer Affairs Consumer Guide and Directory of Certified Insulating Materials.

(c) Materials shall comply with flame spread rating and smoke density requirements of Chapter 26 and Section 706 of the Title 24, Part 2: all installations with exposed facings must use fire retardant facings which have been tested and certified not to exceed a flame spread index (FSI) of 25 and a smoke development index (SDI) of 450. Insulation facings that do not touch a ceiling, wall, or floor surface, and faced batts on the undersides of roofs with an air space between the ceiling and facing are considered exposed applications.

(d) Materials shall be installed according to manufacturer specifications and instructions.

(e) Hard covers or draft stops shall be placed over all drop ceiling areas and interior wall cavities to keep insulation in place and stop air movement. If hard covers or draft stops are missing or incomplete, they shall be completed before insulation is installed.

(f) Required eave ventilation shall not be obstructed - the net free-ventilation area of the eave vent shall be maintained.

(g) Eave vent baffles shall be installed to prevent air movement under or into the batt.

(h) Insulation shall cover all recessed lighting fixtures. If the fixtures are not rated for insulation contact (IC) and air tight, the fixtures shall be replaced.

(i) All recessed light fixtures that penetrate the ceiling shall be listed for zero clearance insulation contact (IC), have a label that certifies it as airtight with leakage less than 2.0 cfm @ 75 Pa when tested to ASTM E283, and shall be sealed with a gasket or caulk between the light's housing and the ceiling.

(j) Loose-fill insulation shall be must completely fill the framed cavity.

(k) Loose-fill insulation shall be installed so that they will be in contact with the air barrier.

RA3.5.4.1.2 R-value Measurement Equipment

The HERS rater shall measure the installed thickness and density of insulation in at least 6 random locations on walls, roof/ceilings and floors (i.e., 6 measurements per opaque surface type: wall, roof/ceiling or floor) to ensure minimum thickness levels and the installed density meets the R-value specified on the Certificate of Compliance, and all other required compliance documentation. For walls, measurement areas shall include low and high areas of the insulated assembly and the HERS rater shall verify density measurements are consistent with the manufacturer's coverage chart.

RA3.5.4.1.3 Certificates

(a) All provisions of Residential Appendix RA2 shall be met. All Insulation Certificates of Installation signed by the insulation installer shall be provided stating the installation is consistent with the Certificate of Compliance, plans and specifications for which the building permit was issued. The insulation installer shall complete all applicable sections of the Certificate of Installation form and attach a bag label or a manufacturer's coverage chart for every different type of loose-fill insulation material used.

(b) For loose-fill insulation, compliance information shall include the minimum installed weight-per-square-foot (or the minimum weight per cubic foot) consistent with the manufacturer's labeled installed-design-density for the desired R-value, and the number of inches required to achieve the desired R-value.

RA3.5.4.1.4 Certificates and Availability

All provisions of Residential Appendix RA2 shall be met. The Insulation Certificate of Installation, with insulation material bag labels or coverage charts attached, signed by the insulation installer, shall be available on the building site for each of the HERS rater's verification inspections. Note: The HERS rater cannot verify compliance credit without these completed forms.

RA3.5.4.2 Wall Insulation

(a) Wall stud cavities shall be caulked, foamed or otherwise sealed to provide a substantially air-tight envelope to the outdoors, attic, garage and crawl space. Special attention shall be paid to plumbing and wiring penetrations through the top plates, electrical boxes that penetrate the sheathing, and the sheathing seal to the bottom plate. All gaps in the air barrier shall be caulked, or sealed with expansive or minimally expansive foam.

(b) Bottom plates of framed and non-framed assemblies shall be sealed to the ground subfloor or slab, and above ground subfloor.

(c) Insulation shall uniformly fill the cavity side-to-side, top-to-bottom, and front-to-back.

(d) Loose fill insulation shall be installed to fill the cavity and be in contact with the sheathing on the back and the wallboard on the front - no gaps or voids.

(e) Loose fill wall insulation shall be installed to fit around wiring, plumbing, and other obstructions.

(f) Non-standard-width cavities shall be filled with insulation fitted into the space without excessive compression.

(g) The installer shall certify on the Certificate of Installation forms that the manufacturer's minimum weight-per-square-foot requirement has been met.

RA3.5.4.2.1 Narrow-Framed Cavities

(a) Non-standard width cavities shall be filled with insulation to snuggly fit into the space, or with minimally expansive foam sealing material.

(b) Narrow spaces less than 1 inch in width at windows and door jambs, shall be filled with minimally expansive foam sealing. In cases where the manufacturer's warranty would be void if minimally expanding foam is used to seal the gap between the window frame or door jamb, the cavity must be airtight and filled with insulation snuggly fitted (with limited compression) in the space.

(c) Narrow spaces less than 2 inches in width, such as between studs at building corners, and at the intersection of interior partition walls to exterior walls, shall be filled with insulation snuggly fitted in the space, or with minimally expansive foam sealing.

RA3.5.4.2.2 Special Situations--Installation Prior to Exterior Sheathing or Lath

(a) Hard to access wall stud cavities, such as; corner channels, wall intersections, and behind tub/shower enclosures shall be insulated to the proper R-value. In most cases this can only be completed prior to the installation of the tub/shower enclosure, the exterior sheathing, or the exterior stucco lath.

(b) An air barrier shall be installed on the inside of the exterior wall(s) directly adjacent to the tub/shower enclosure.

RA3.5.4.2.3 Special Situations--Obstructions

(a) Insulation shall completely fill around wiring and plumbing without compression.

(b) Insulation shall fill between the sheathing and the rear of electrical boxes and phone boxes.

(c) In cold climates, where water pipes may freeze (such as Climate Zones 2, 11-14 and 16) pipes shall have at least 1/2 of the insulation between the water pipe and towards the outside surface of the exterior wall. As much insulation as possible shall be placed between the pipe and the outside (without compression), and remaining insulation shall be placed between the pipe and the interior assembly material.

RA3.5.4.2.4 Special Situations--Rim Joists

(a) All rim-joists shall be insulated to the same R-value as the adjacent walls.

(b) The insulation shall be installed without gaps, voids, or excessive compression.

RA3.5.4.2.5 Special Situations--Kneewalls and Skylight Shafts

(a) Framing for kneewalls and skylight shafts that separate conditioned from unconditioned space shall be insulated to meet or exceed the wall R-value specified on the Certificate of Compliance, and all other required compliance documentation.

(b) The insulation shall be installed without gaps or compression.

(c) Steel-framed kneewalls and skylight shafts, shall meet or exceed the mandatory minimum insulation requirements and external surfaces of steel studs shall be covered with continuous insulation unless otherwise specified on the Certificate of Compliance using correct U-factors from Joint Appendix JA4, Table 4.3.4 (or U-factors approved by the Commission Executive Director).

(d) The backside of air permeable insulation exposed to the unconditioned attic space shall be completely covered with a continuous air barrier.

(e) The house side of the insulation shall be in contact with the drywall or other wall finish.

(f) The insulation shall be supported so that it will not fall down by using support such as netting.

(g) Insulation for all kneewall and skylight shafts shall be completely enclosed by vertical and horizontal framing, including horizontal plates at top and bottom of the insulation.

RA3.5.4.2.6 Special Situations--HVAC/Plumbing Closet

Walls of interior closets for HVAC and/or water heating equipment, which require combustion air venting, shall be insulated to at least the same R-value as other demising walls (i.e., walls separating conditioned space and attached garage), or as specified on the Certificate of Compliance.

RA3.5.4.2.7 Special Situations--Double Walls and Framed Bump-Outs

(a) Insulation shall fill the entire cavity; or, an additional air barrier shall be installed inside the double wall or bump-out and in contact with the insulation so that the insulation fills the cavity formed with the additional air barrier.

(b) Entire double walls and framed bump-outs shall be air-tight.

RA3.5.4.2.8 Special Situations--Structural Bracing, Tie-downs, Steel Structural Framing

(a) Framing and bracing used for structural purposes shall be identified on plan documents with diagrams and/or design drawings.

(b) Insulation shall be installed in a manner that restricts thermal bridging through the structural framing assembly.

(c) Insulation shall be applied to fully enclose and/or adhere to all sides and ends of structural assembly framing that separate conditioned from unconditioned space.

(d) The structural portions of assemblies shall be air-tight.

RA3.5.4.2.9 Special Situations--Window and Door Headers

(a) All single-member window and door headers shall be insulated to a minimum of R-3 for a 2x4 framing, or equivalent width, and a minimum of R-5 for all other assemblies. Insulation is to be placed between the interior face of the header and inside surface of the interior wall finish.

(b) No header insulation is required for single-member headers that are the same width as the wall, provided that the entire wall has at least R-2 insulation.

RA3.5.4.2.10 Special Situations--Gable Ends in Unvented Attics

(a) In unvented attics, where insulation is applied directly to the underside of the roof deck, framing for gable ends that separate the unvented attic from unconditioned space shall be insulated to meet or exceed the wall R-value of the adjacent exterior wall construction as specified on the Certificate of Compliance.

(b) The backside of air permeable insulation exposed to the unconditioned attic space shall be completely covered with a continuous air barrier.

RA3.5.4.2.11 Roof/Ceilings

(a) Hard covers or draft stops shall be placed over all drop ceiling areas and interior wall cavities to keep insulation in place and stop air movement. If hard covers or draft stops are missing or incomplete, they shall be completed before insulation is installed or the entire drop area shall be filled with loose-fill insulation level with the rest of the attic.

(b) Baffles shall be placed at eaves or soffit vents of vented attics to keep insulation from blocking eave ventilation and prevent air movement under or into the insulation. The required net free-ventilation shall be maintained.

(c) Attic rulers appropriate to the material shall be installed and evenly distributed throughout the attic to verify depth: one ruler for every 250 square feet and clearly readable from the attic access. Attic rulers shall be scaled to read inches of insulation and the R-value installed.

(d) Insulation shall be applied underneath and on both sides of obstructions such as cross-bracing and wiring.

(e) Insulation shall be applied all the way to the outer edge of the wall top plate.

(f) All recessed light fixtures that penetrate the ceiling shall be listed for zero clearance insulation contact (IC), have a label that certifies it as airtight with leakage less than 2.0 cfm @ 75 Pa when tested to ASTM E283, and shall be sealed with a gasket or caulk between the light's housing and the ceiling.

(g) Insulation shall cover recessed lighting fixtures. Fixtures that are not rated for insulation contact (IC), and air tight, shall be removed and/or replaced.

(h) Insulation shall be kept away from combustion appliance flues in accordance with flue manufacturer's installation instructions or labels on the flue.

(i) Insulation shall be blown to a uniform thickness throughout the attic with all areas meeting or exceeding the insulation manufacturer's minimum requirements for depth and weight-per-square-foot.

(j) The installer shall certify on the Certificate of Installation forms that the manufacturer's minimum weight-per-square-foot requirement has been met.

(k) The HERS rater shall verify that the manufacturer's minimum weight-per-square-foot requirement has been met for attics insulated with loose-fill insulation. Verification shall be determined using the methods of the Insulation Contractor’s Association of America (ICAA) Technical Bulletin #17 or #33 except that only one sample shall be taken in the area that appears to have the least amount of insulation. The rater shall record the weight-per-square-foot of the sample on the Certificate of Verification.

(l) The HERS rater shall verify that the manufacturer’s minimum insulation thickness has been installed. For cellulose insulation, this verification shall take into account the time that has elapsed since the insulation was installed. At the time of installation, the insulation shall be greater than or equal to the manufacturer’s minimum initial insulation thickness. If the HERS rater does not verify the insulation thickness at the time of installation, and if the insulation

has been in place less than fourteen days, the insulation thickness shall be greater than the manufacturer's minimum required thickness to achieve the given R-value at the time of installation, less 1/2 inch to account for settling. If the insulation has been in place for fourteen days or more, the insulation thickness shall be greater than or equal to the manufacturer's minimum required settled thickness to achieve the given R-value.

RA3.5.4.2.12 Special Situations--Enclosed Rafter Ceilings

(a) An air space shall be maintained between the insulation and roof sheathing as specified by California Building Code Sections 1203.2 and R806.2, or as specified by the local building department.

(b) Insulation installed in unvented rafter ceilings or to the underside of unvented roofs with an attic below shall have an R-value conforming to compliance documentation and the air barrier shall be uniform across the transition of roof to wall. The insulation shall be in contact with the air barrier.

RA3.5.4.2.13 RESERVED

RA3.5.4.2.14 Special Situations--HVAC Platform

(a) Loose-fill insulation shall be placed below any platform or cat-walk for HVAC equipment installation and access.

(b) Loose-fill insulation shall be installed so that it will be in contact with the air barrier.

(c) Loose-fill insulation shall be installed under HVAC platform to the full depth and rated R-value as specified on the Certificate of Compliance, without gaps or compression. If necessary, HVAC platform shall be raised to accommodate ceiling insulation.

RA3.5.4.2.15 Special Situations--Attic Access

Permanently attach rigid board insulation or batt or blanket insulation with the appropriate R-value to the access door using adhesive or mechanical fastener. The bottom of the attic access shall be gasketed to prevent air leakage of conditioned air to the unconditioned attic.

RA3.5.4.2.16 Special Situations--Below Roof Deck Insulation (Vented and Unvented Attics)

(a) Below roof deck loose-fill insulation shall be netted and installed per manufacturer's specifications.

(b) For vented attics, below deck loose-fill insulation shall be installed in a manner that does not obstruct soffit, eave, ridge or eyebrow vents to allow for adequate attic ventilation. Netting shall be installed in a manner that allows for the required net free area of soffit, eave, gable, and roof vents to be maintained after being filled. Eave vent baffles shall be installed to prevent air movement under or into the insulation.

(c) Netting shall be installed to seal around conduit, plumbing, roof penetrations and all other obstructions that penetrate the netting.

(d) Loose-fill insulation shall be installed uniformly in the netted cavity side-to-side, top-to-bottom, and front-to-back and be in continuous contact with the roof sheathing. Loose-fill insulation shall be installed to fit around wiring, conduit, plumbing, and other obstructions.

(e) The installer shall certify on the Certificate of Installation compliance documents that the manufacturer's minimum weight-per-square-foot requirement has been met.

(f) The HERS Rater shall verify that the manufacturer's minimum insulation thickness and specified R-value has been installed.

(g) The HERS Rater shall verify the minimum weight-per-square-foot requirement has been met. Verification shall be determined using manufacturer's recommended verification procedures. The HERS Rater shall record the weight-per-square-foot of the sample on the Certificate of Verification.

(h) Box netted installations are where netting is suspended from the top of roofing framing member, or top chord, to provide a fill depth that completely encloses the top chord, creating a uniform insulation layer of loose-fill insulation across the entire underside of the roof deck. For these installations, netted insulation cavity thickness shall be uniform and meet the minimum insulation thickness.

(i) For draped netted installations, where netting is attached directly to the bottom of the roof framing member, the HERS Rater shall verify that average insulation depth in the cavity meets the depth as specified by the Certificate of Compliance.

RA3.5.4.3 Raised Floors

(a) Loose-fill insulation shall be in contact with the air barrier - usually the subfloor.

(b) Loose-fill insulation shall completely fill around wiring and plumbing.

(c) Loose-fill insulation shall be properly supported where necessary to avoid sagging, gaps, voids, and compression.

RA3.5.4.3.1 Homes with Floors Over Garage

(a) Loose-fill insulation shall be in contact with the air barrier - usually the subfloor.

(b) On floors that are over garages, or where there is an air space between the insulation and the subfloor, the rim joist shall be insulated.

(c) Loose-fill insulation shall completely fill around wiring and plumbing.

(d) Loose-fill insulation shall be properly supported to avoid sagging, gaps, voids, and compression.

RA3.5.4.3.2 Homes with Conditioned Space Over Garage

The separation between conditioned space (house) and the garage shall be insulated with fully supported loose-fill insulation to create a continuous thermal barrier. All rim and band joists adjoining conditioned space shall be air tight and insulated.

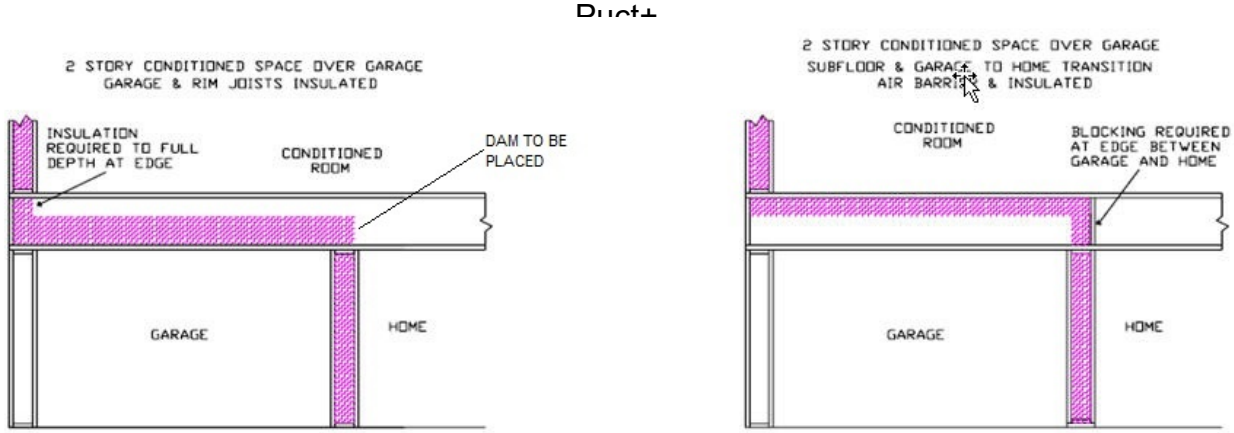

Figure RA3.5-3 Homes with Conditioned Space Over Garage – Loose Fill Insulation

RA3.5.4.3.3 Homes with No Conditioned Space Over Garage

The band joist where the garage transitions to an attic above conditioned space shall have an air barrier installed in contact with the edge of the attic insulation.

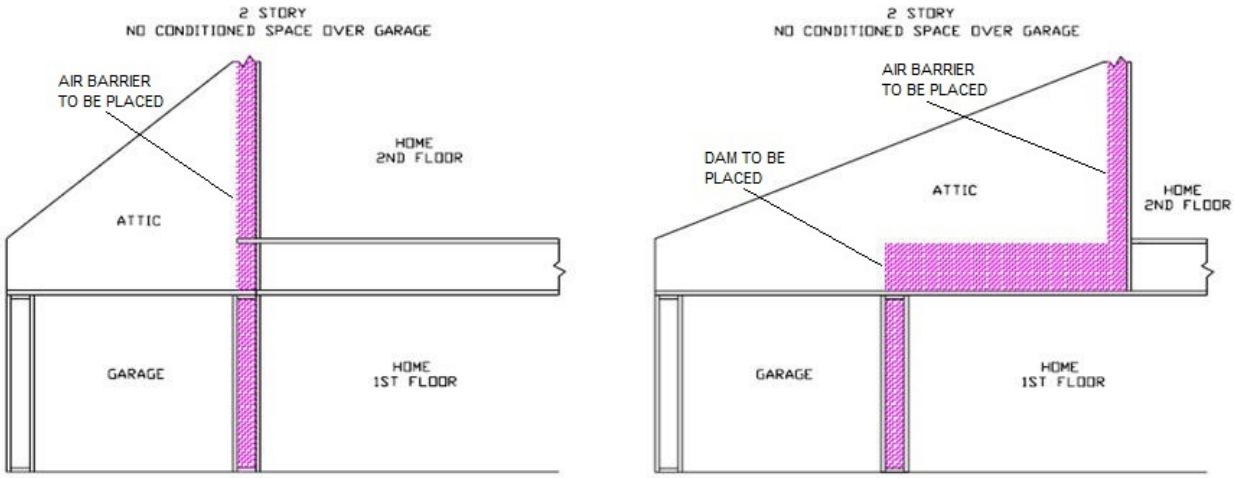

Figure RA3.5-4 Homes with No Conditioned Space over Garage – Loose Fill Insulation

RA3.5.5 RIGID BOARD INSULATION

These procedures detail the installation and inspection protocols necessary to qualify for Quality Insulation Installation (QII) of rigid board insulation sheathing material. These procedures must be field verified before the building construction permit is finalized.

These procedures are to be followed by the insulation installer and a qualified Home Energy Rating System (HERS) rater must verify its conformance for meeting the requirements of Sections 150.1(c)1E or 170.2(a)6, and 110.7 of the Standards.

RA3.5.5.1 Thermal Specification

This insulation type is manufactured of different materials and is in sheet or board form. Rigid board insulation materials are typically used on the exterior side of framed wall assemblies and over the top of exterior roof decks. These products also may be used for special situations in rafter spaces of cathedral ceilings, floors, at floor rim joists, and within or on the outside of window and door headers. This insulation type may also be integral to exterior siding materials. Rigid board insulation material most often is used in conjunction with other insulation materials installed within the framed cavity. The R-value is dependent on the type of material and its thickness. Specific product R-values are readily available from the manufacturer for the specific materials being installed. R-value of the product is typically marked on the product. The installed insulation must meet the R-value stated on the compliance documentation.

(a) Requirements for Walls, Ceilings and Floors Materials shall comply with, and be installed in conformance with, all applicable building codes for building. California Building Code (including, but not limited to, California Electric Code Section 719) and installed to meet all applicable fire codes.

(b) Materials shall meet California Quality Standards for Insulating Material, Title 24, Part 12, Chapter 4, Article 3, listed in the California Department of Consumer Affairs Consumer Guide and Directory of Certified Insulating Materials.

(c) Materials shall comply with flame spread rating and smoke density requirements of Chapter 26 and Section 706 of the Title 24, Part 2: all installations with exposed facings must use fire retardant facings which have been tested and certified not to exceed a flame spread index (FSI) of 25 and a smoke development index (SDI) of 450. Insulation facings that do not touch a ceiling, wall, or floor surface, and faced batts on the undersides of roofs with an air space between the ceiling and facing are considered exposed applications.

(d) Materials shall be installed according to manufacturer specifications and instructions.

(e) Rigid board insulation shall be attached according to the manufacturer's specifications.

(f) Rigid board insulation may be used as the air barrier provided it has been tested to conform to the air barrier performance conditions of the Standards.

RA3.5.5.1.1 R-value Measurement Equipment

The HERS raters shall verify the installed thickness of insulation in all assemblies and locations on walls, roof/ceilings, and floors, and to ensure that insulation levels and installation integrity meet the R-value specified on the Certificate of Compliance, and all other required compliance documentation.

RA3.5.5.1.2 Certificates

All provisions of Residential Appendix RA2 shall be met. All Insulation Certificates of Installation signed by the insulation installer shall be provided stating the installation is consistent with the Certificate of Compliance, plans and specifications for which the building permit was issued. The

insulation installer shall also complete the applicable sections of the Certificate of Installation form and attach a product specification or data sheet for every insulation material used.

RA3.5.5.1.3 Certificates and Availability

All provisions of Residential Appendix RA2 shall be met. The Insulation Certificate of Installation, with insulation material labels or specification/data sheets attached, signed by the insulation installer, shall be available on the building site for each of the HERS rater's verification inspections. Note: The HERS rater cannot verify compliance credit without these completed forms.

RA3.5.5.2 Wall Insulation

(a) Wall stud cavities shall be caulked, foamed or otherwise sealed to provide a substantially air-tight envelope to the outdoors, attic, garage and crawl space. All plumbing and wiring penetrations through the top and bottom plates and electrical boxes that penetrate the sheathing shall be sealed. All gaps in the air barrier shall be caulked, or sealed with minimally expansive foam.

(b) Bottom plates of framed and non-framed assemblies shall be sealed to the ground subfloor or slab, and above ground subfloor.

(c) Installation shall uniformly fit across the plane of the wall and taping and/or caulking of all joints and seams of the insulation shall be maintained to be considered as the air barrier.

RA3.5.5.2.1 Narrow-Framed Cavities

(a) Non-standard with cavities shall be filled with insulation to snuggly fit into the space, or with minimally expansive foam sealing material.

(b) Narrow spaces less than 1 inch in width at windows and door jambs, shall be filled with minimally expansive foam sealing material. In cases where the manufacturer's warranty would be void if minimally expanding foam is used to seal the gap between the window frame or door jamb, the cavity must be airtight and filled with insulation snuggly fitted in the space.

(c) Narrow spaces less than 2 inches in width, such as between studs at building corners, and at the intersection of interior partition walls to exterior walls, shall be filled with insulation snuggly fitted in the space, or with minimally expansive foam sealing.

RA3.5.5.2.2 Special Situations--Installation Prior to Exterior Sheathing or Lath

(a) Hard to access wall stud cavities, such as corner channels, wall intersections, and behind tub/shower enclosures shall be insulated to the proper R-value. In most cases this can only be completed prior to the installation of the tub/shower enclosure, the exterior sheathing, or the exterior stucco lath.

(b) An air barrier shall be installed on the inside of the exterior wall(s) directly adjacent to the tub/shower enclosure.

RA3.5.5.2.3 Special Situations--Obstructions

(a) Penetrations and obstructions to the insulation shall be completely caulked and sealed.

(b) Insulation shall fill between the sheathing and the rear of electrical boxes and phone boxes.

RA3.5.5.2.4 Special Situations--Rim Joists

(a) All rim-joists shall be insulated to the same R-value as the adjacent walls.

(b) The insulation shall be installed without gaps and voids.

RA3.5.5.2.5 Special Situations--Kneewalls and Skylight Shafts

(a) Framing for kneewalls and skylight shafts that separate conditioned from unconditioned space shall be insulated to meet or exceed the wall R-value specified on the Certificate of Compliance, and all other required compliance documentation.

(b) Steel-framed kneewalls and skylight shafts shall meet or exceed the mandatory minimum insulation requirements and external surfaces of steel studs shall be covered with continuous insulation unless otherwise specified on the Certificate of Compliance using correct U-factors from Joint Appendix JA4, Table 4.3.4 (or U-factors approved by the Commission Executive Director).

(c) The backside of air permeable insulation exposed to the unconditioned attic space shall be completely covered with a continuous air barrier.

RA3.5.5.2.6 Special Situations--HVAC/Plumbing Closet

Walls of interior closets for HVAC and/or water heating equipment, which require combustion air venting, shall be insulated to at least the same R-value as other demising walls (i.e., walls separating conditioned space and attached garage), or as specified on the Certificate of Compliance.

RA3.5.5.2.7 Special Situations--Double Walls and Framed Bump-Outs

(a) Insulation shall fill the entire cavity; or, an additional air barrier shall be installed inside the double wall or bump-out and in contact with the insulation so that the insulation fills the cavity formed with the additional air barrier.

(b) Entire double walls and framed bump-outs shall be air-tight.

RA3.5.5.2.8 Special Situations--Structural Bracing, Tie-downs, Steel Structural Framing

(a) Framing and bracing used for structural purposes shall be identified on plan documents with diagrams and/or design drawings.

(b) Insulation shall be installed in a manner that restricts thermal bridging through the structural framing assembly.

(c) Insulation shall be applied to fully enclose and/or adhere to all sides and ends of structural assembly framing that separate conditioned from unconditioned space.

(d) The structural portions of assemblies shall be air-tight.

RA3.5.5.2.9 Special Situations--Window and Door Headers

(a) All single-member window and door headers shall be insulated to a minimum of R-3 for a 2x4 framing, or equivalent width, and a minimum of R-5 for all other assemblies. Insulation is to be placed between the interior face of the header and inside surface of the interior wall finish wall material.

(b) No header insulation is required for single-member headers that are the same width as the wall, provided that the entire wall has at least R-2 insulation.

RA3.5.5.2.10 Special Situation--Gable Ends in Unvented Attics

(a) In unvented attics, where insulation is applied directly to the underside of the roof deck, framing for gable ends that separate the unvented attic from unconditioned space shall be insulated to meet or exceed the wall R-value of the adjacent exterior wall construction as specified on the Certificate of Compliance.

(b) The backside of air permeable insulation exposed to the unconditioned attic space shall be completely covered with a continuous air barrier.

RA3.5.5.3 Roof/Ceilings

(a) Baffles shall be placed at eaves or soffit vents of vented attics to keep insulation from blocking eave ventilation and prevent air movement under the insulation. The required net free-ventilation shall be maintained.

(b) Hard covers or draft stops shall be placed over all drop ceiling areas and interior wall cavities to keep insulation in place and stop air movement. If hard covers or draft stops are missing or incomplete, they shall be completed before insulation is installed.

(c) Rigid board insulation installed above the roof deck shall be applied to the outer edge of the plane of the wall top plate.

(d) Insulation shall cover all recessed lighting fixtures. If the fixtures are not rated for insulation contact (IC) and air tight, the fixtures shall be removed and/or replaced.

(e) All recessed light fixtures that penetrate the ceiling shall be listed for zero clearance insulation contact (IC), have a label that certifies it as airtight with air leakage less than 2.0 cfm @ 75 Pa when tested to ASTM E283, and shall be sealed with a gasket or caulk between the light's housing and the ceiling.

RA3.5.5.3.1 Special Situations--Enclosed Rafter Ceilings

(a) An air space shall be maintained between the insulation and roof sheathing as specified by California Building Code Section 1203.2 and R806.2, or as specified by the local building department.

(b) Insulation installed in unvented rafter ceilings or to the underside of unvented roofs with an attic below shall have an R-value conforming to compliance documentation and the air

barrier shall be uniform across the transition of roof to wall. The insulation shall be in contact with the air barrier.

RA3.5.5.3.2 RESERVED

RA3.5.5.3.3 Special Situations--HVAC Platform

Insulation shall be placed below any platform or cat-walk for HVAC equipment installation and access.

RA3.5.5.3.4 Special Situations--Attic Access

Permanently attach rigid board insulation or batt or blanket insulation with the appropriate R-value to the access door using adhesive or mechanical fastener. The bottom of the attic access shall be gasketed to prevent air leakage of conditioned air to the unconditioned attic.

RA3.5.5.4 Raised Floors

Rigid board insulation shall be in contact with the air barrier - usually the subfloor.

RA3.5.5.4.1 Homes with Floors Over Garage

(a) Rigid board insulation shall be in contact with the air barrier - usually the subfloor.

(b) On floors that are over garages, or where there is an air space between the insulation and the subfloor, the rim joist shall be insulated.

RA3.5.5.4.2 Homes with Conditioned Space Over Garage

The separation between conditioned space (house) and the garage shall be insulated with fully supported rigid board insulation to create a continuous thermal barrier. All rim and band joists adjoining conditioned space shall be air tight and insulated.

RA3.5.5.4.3 Homes with No Conditioned Space Over Garage

The band joist where the garage transitions to an attic above conditioned space shall have an air barrier installed in contact with the edge of the attic insulation.

RA3.5.6 SPRAY POLYURETHANE FOAM INSULATION

These procedures detail the installation and inspection protocols necessary to qualify for Quality Insulation Installation (QII) of spray polyurethane foam (SPF) insulation. These procedures must be field verified before the building construction permit is finalized.

These procedures are to be followed by the insulation installer and a qualified Home Energy Rating System (HERS) rater must verify its conformance for meeting the requirements of Sections 150.1(c) and 110.7of the Standards.

These procedures apply to two types of SPF used as building insulation: medium-density closed cell SPF (ccSPF) and low-density open cell SPF (ocSPF). Most often, the same procedures will

apply to both ccSPF and ocSPF. However, in some construction situations the procedures will be different.

NOTE: SPF insulation shall be field verified using these procedures whenever R-values other than the default R-value per inch are used for compliance (see *"R-value"* in sections RA3.5.6.1.1 and RA3.5.6.1.2 below).

RA3.5.6.1 Thermal Specification

RA3.5.6.1.1 ccSPF

A spray applied polyurethane foam insulation having a closed cellular structure resulting in an installed nominal density of 1.5 to less than 2.5 pounds per cubic foot (pcf).

R-value: The total R-value shall be calculated based on the nominal required thickness of the insulation multiplied by a thermal resistivity of 5.8 per inch. The R-value of ccSPF insulation shall meet or exceed the installed thickness specified in Table 3.5-1 below.

Alternatively, the total R-value may be calculated based on the thickness of insulation multiplied by the "tested R-value per inch" as certified by the Department of Consumer Affairs, Bureau of Household Goods and Services. Supporting documentation showing the certified R-value per inch shall be made available at the site for verification and noted on the Certificate of Installation. Based on this calculation, the overall assembly U-factor shall be determined by selecting the assembly type, framing configuration, and cavity insulation from the appropriate Reference Joint Appendix JA4 table or other approved method specified in Section JA4 of the Reference Appendices.

The R-value of the installed insulation shall be based on the verified thickness at an R-value of 5.8 per inch unless supporting documentation is provided that verifies use of other values. Approved compliance software shall make appropriate adjustments to account for the R-value and U-factor effects of the ccSPF assembly.

Nominal Thickness: ccSPF sprayed into framed cavities or on flat surfaces will expand with variable thicknesses, visibly appearing as undulations on the surface of the insulation. The average thickness of the foam insulation must meet or exceed the required R-value. Depressions in the foam insulation's surface shall not be greater than 1/2-inch of the required thickness at any given point of the surface area being insulated.

Filling of Framed Assemblies: ccSPF insulation is not required to fill the cavities of framed assemblies provided the installed thickness of insulation conforms to compliance documentation and that the bottom and top plates of vertical framing and both ends of horizontal framing, including band and rim joists, are sprayed to completely fill the cavity adjacent to and in contact with the framing to a distance of 2.0 inches away from the framing for ccSPF insulation, or filled to the thickness meeting ASTM testing as an air barrier.

Air Barrier: ccSPF installed as an air barrier shall be a minimum of 2.0 inches in thickness; alternatively, ccSPF insulation shall be installed at a thickness that meets an air permeance no greater than 0.02 L/s-m^2 at 75 Pa pressure differential when tested in accordance to ASTM E2178 or ASTM E283.

RA3.5.6.1.2 Open Cell Spray Foam (ocSPF)

A spray applied polyurethane foam insulation having an open cellular structure resulting in an installed nominal density of 0.4 to less than 1.5 pounds per cubic foot (pcf).

R-value: The total R-value shall be calculated based on the nominal required thickness of the insulation multiplied by a thermal resistivity of 3.6 per inch. The R-value of ocSPF insulation shall meet or exceed the installed thickness specified in Table 3.5-1 below.

Alternatively, the total R-value may be calculated based on the thickness of insulation multiplied by the "tested R-value per inch" as certified by the Department of Consumer Affairs, Bureau of Household Goods and Services. Supporting documentation showing the certified R-value per inch shall be made available at the site for verification and noted on the Certificate of Installation. Based on this calculation, the overall assembly U-factor shall be determined by selecting the assembly that matches the assembly type, framing configuration, and cavity insulation from the appropriate Reference Joint Appendix JA4 table or other approved method specified in Section JA4 of the Reference Appendices.

The R-value of the installed insulation shall be based on the verified thickness at an R-value of 3.6 per inch unless supporting documentation is provided that verifies use of other values. Approved compliance software shall make appropriate adjustments to account for the R-value and U-factor effects of the ocSPF assembly.

Nominal Thickness: ocSPF sprayed into framed cavities or on flat surfaces will expand with variable thicknesses, visibly appearing as undulations on the surface of the insulation. The average thickness of the foam insulation must meet or exceed the required R-value. Depressions in the foam insulation surface shall not be greater than 1/2-inch of the required thickness provided these depressions do not exceed 10% of the surface area being insulated.

Filling of Framed Assemblies: ocSPF insulation shall completely fill cavities of 2x4 inch framing or less. Cavities greater than 2x4 inch framing dimensions may be filled to the thickness that meets the required R-value used for compliance provided that the bottom and top plates of vertical framing and both ends of horizontal framing, including band and rim joists, are sprayed to completely fill the cavity adjacent to and in contact with the framing to a distance of 5.5 inches away from the framing for ocSPF insulation, or filled to the thickness meeting ASTM testing as an air barrier.

Air Barrier: ocSPF installed as an air barrier shall be a minimum of 5.5 inches in thickness; alternatively, ocSPF insulation shall be installed at a thickness that meets an air permeance no greater than 0.02 L/s-m^2 at 75 Pa pressure differential when tested in accordance to ASTM E2178 or ASTM E283.

Table RA3.5-1: Required Thickness (inches) of SPF Insulation to Achieve Specified R-values

Equivalent R-Values for SPF insulation	**11**	**13**	**15**	**19**	**21**	**22**	**25**	**30**	**38**
Required thickness of ccSPF insulation @ R5.8/inch	2.00	2.25	2.75	3.50	3.75	4.00	4.50	5.25	6.75
Required thickness of ocSPF insulation @ R3.6/inch	3.0	3.5	4.2	5.3	5.8	6.1	6.9	8.3	10.6

RA3.5.6.1.3 Requirements for Walls, Ceilings and Floors

(a) Materials shall comply with, and be installed in conformance with, all applicable building codes for building. California Building Code (including, but not limited to, California Electric Code Section 719) and installed to meet all applicable fire codes.

(b) Materials shall meet California Quality Standards for Insulating Material, Title 24, Part 12, Chapter 4, Article 3, listed in the California Department of Consumer Affairs Consumer Guide and Directory of Certified Insulating Materials.

(c) Materials shall comply with flame spread index and smoke developed index requirements of the CBC, Title 24, Part 2, Section 2603.5.4.

(d) The installer shall determine and the HERS rater shall verify that the manufacturer's nominal insulation thickness has been installed and certified and that all requirements of the Certificate of Verification have been met.

(e) The installer shall determine and the HERS rater shall verify that insulation is in substantial contact with the assembly air barrier. When SPF insulation is being used to provide air barrier control, the SPF insulation must cover and be in contact with the entire surface of the framing, filling the cavity to a distance away from the framing specified in "Filling of Framed Assemblies" above.

(f) SPF insulation shall be applied by SPF applicators trained and experienced in the use and maintenance of high-pressure, plural-component equipment. SPF applicators shall be certified by the SPF insulation manufacturer for the application of SPF insulation systems.

(g) SPF insulation shall be spray-applied to fully adhere to assembly framing, floor and ceiling the joists, and other framing surfaces within the construction cavity. When multiple layers of SPF material are applied, each foam lift (i.e. spray application) shall have adhesion at substrate and foam interfaces. SPF insulation shall not exhibit areas that:

1. Have voids or gaps in the uniformity of the insulation
2. Are extremely soft or spongy
3. Show the presence of liquid
4. Have blistering between lifts
5. Show differences in coloration of adjacent foam layers
6. Indicate the presence of other materials between lifts

(h) SPF insulation shall be installed in conformance with the manufacturer's specifications, recommendations and temperature/humidity limitations.

(i) Substrates to which SPF insulation is applied shall be secure and free of surface moisture, frost, grease, oils, dirt, dust or other contaminants that would adversely affect SPF adhesion.

(j) SPF insulation shall meet all provisions of the CBC Title 24, Parts 2 and 2.5. SPF shall be separated from occupied spaces by an approved thermal barrier, such as 0.5 inch gypsum wallboard or other approved material, or show equivalence through testing in accordance with CBC, Title 24, Part 2, Section 2603, and Part 2.5, Section R316.

(k) SPF insulation may be used as the air barrier provided it has been tested to conform to the air barrier performance conditions of the Standards.

RA3.5.6.1.4 R-value Measurement Equipment

(a) The HERS rater shall measure the installed thickness of insulation in at least 6 random locations on walls, roof/ceilings and floors (i.e., 6 measurements per opaque surface type: wall, roof/ceiling or floor) to ensure minimum thickness levels necessary to meet the R-value specified on the Certificate of Compliance, and all other required compliance documentation. Measurement areas shall include low and high areas of the SPF insulated surface.

(b) Probes for inspection of installed thickness of SPF insulation. The insulation thickness shall be verified by using a probe, gauge or device capable of measuring the installed thickness of insulation. –A pointed measurement probe or other gauge or device, capable of penetrating the full thickness of the insulation, shall be used having measurements marked by at least one-eighth inch increments. Insulation thickness measurement probes and gauges or devices shall be accurate to within ±1/8 inch and shall be designed and used in a manner to cause minimal damage to the insulation.

RA3.5.6.1.5 Certificates

All provisions of Residential Appendix RA2 shall be met. The Insulation Certificates of Installation shall be signed by the SPF applicator stating that the installation is consistent with the Certificate of Compliance, plans and specifications for which the building permit was issued shall be provided. The SPF applicator shall also make available supporting documentation showing the certified R-value per inch.

RA3.5.6.1.6 Certificates and Availability

All provisions of Residential Appendix RA2 shall be met. All compliance documentation shall be completed, signed by the SPF applicator, and a measuring probe or similar device shall be available at the building site for the HERS rater's verification inspection. Note: The HERS rater shall not verify compliance credit without these completed forms.

RA3.5.6.2 Wall Insulation

(a) SPF insulation shall be applied to provide an air-tight envelope to the outdoors and between adjoining cavity surfaces of conditioned and unconditioned space, such as the: attic, garage, and crawl space. Special attention shall be paid to plumbing and wiring penetrations through

the top plates and bottom plate framing, and electrical boxes that penetrate the sheathing and the sheathing seal to the top and bottom plate framing.

(b) Bottom plates of framed and non-framed assemblies shall be sealed to the ground subfloor or slab, and above ground subfloor.

(c) SPF insulation installation shall uniformly cover the cavity side-to-side and end-to-end and shall be installed to cover and form an air barrier on the framing at the top, bottom and sides of each cavity.

NOTE:

Filling of Framed Assemblies: ccSPF insulation is not required to fill the cavities of framed assemblies provided the installed thickness of insulation conforms to compliance documentation and that the bottom and top plates of vertical framing and both ends of horizontal framing, including band and rim joists, are sprayed to completely fill the cavity adjacent to and in contact with the framing to a distance of 2.0 inches away from the framing for ocSPF insulation, or filled to the thickness meeting ASTM testing as an air barrier.

Filling of Framed Assemblies: ocSPF insulation shall completely fill cavities of 2x4 inch framing or less. Cavities greater than 2x4 inch framing dimensions may be filled to the thickness that meets the required R-value used for compliance provided that the bottom and top plates of vertical framing and both ends of horizontal framing, including band and rim joists, are sprayed to completely fill the cavity adjacent to and in contact with the framing to a distance of 5.5 inches away from the framing for ocSPF insulation, or filled to the thickness meeting ASTM testing as an air barrier.

Air Barrier: ccSPF installed as an air barrier shall be 2.0 inches in thickness. ocSPF installed as an air barrier shall be a minimum of 5.5 inches in thickness. Alternatively, ccSPF and ocSPF insulation shall be installed at a thickness that meets an air permeance no greater than 0.02 L/s-m^2 at 75 Pa pressure differential when tested in accordance to ASTM E2178 or ASTM E283.

RA3.5.6.2.1 Narrow-Framed Cavities

(a) Non-standard width cavities shall be filled with SPF insulation at a depth consistent with the SPF thickness required to achieve the specified R-value.

(b) Narrow spaces less than 1 inch in width at windows and door jambs, shall be filled with minimally expansive foam sealing material or SPF insulation. In cases where the manufacturer's warranty would be void if minimally expanding foam is used to seal the gap between the window frame or door jamb, the cavity must be airtight and filled with a different insulation product snuggly fitted (with limited compression) in the space.

(c) Narrow spaces less than 2 inches in width, such as between studs at building corners and at the intersection of interior partition walls, shall be filled with insulation snuggly fitted into the space, with minimally expansive foam, or SPF insulation.

RA3.5.6.2.2 Special Situations--Installation Prior to Exterior Sheathing or Lath

(a) Hard to access wall stud cavities, such as corner channels, wall intersections, and behind tub/shower enclosures shall be insulated to the proper R-value. In most cases, this can only

be completed prior to the installation of the tub/shower enclosure, the exterior sheathing, or the exterior stucco lath.

(b) An air barrier shall be installed on the inside of the exterior wall(s) directly adjacent to the tub/shower enclosure.

RA3.5.6.2.3 Special Situations--Obstructions

(a) SPF insulation shall be applied to fully seal around wiring and plumbing.

(b) SPF insulation shall be applied to fully seal between the sheathing and the rear of electrical boxes and telephone boxes.

(c) In cold climates, where water pipes may freeze (Climate Zones 14 and 16), pipes shall have at least 2/3 of the insulation between the water pipe and the outside surface of the exterior wall. If the pipe is near the exterior finish assembly layers, as much insulation as possible shall be placed between the pipe and the exterior assembly material.

RA3.5.6.2.4 Special Situations--Rim Joists

(a) All rim-joists shall be insulated to the same R-Value as the adjacent walls.

(b) The insulation shall be installed without gaps or voids.

RA3.5.6.2.5 Special Situations--Kneewalls and Skylight Shafts

(a) Framing for kneewalls and skylight shafts that separate conditioned from unconditioned space shall be insulated to meet or exceed the wall R-value specified on the Certificate of Compliance, and all other required compliance documentation.

(b) Kneewalls within conditioned space do not need to be insulated.

(c) Steel-framed kneewalls and skylight shafts shall meet or exceed the mandatory minimum insulation requirements and external surfaces of steel studs shall be covered with continuous insulation unless otherwise specified on the Certificate of Compliance using correct U-factors from Joint Appendix JA4, Table 4.3.4 (or U-factors approved by the Commission Executive Director).

(d) The backside of air permeable insulation exposed to the unconditioned attic space shall be completely covered with a continuous air barrier.

(e) The house side of the insulation shall be in contact with the drywall or other wall finish.

(f) Insulation for all kneewall and skylight shafts shall be completely enclosed by vertical and horizontal framing, including horizontal plates at top and bottom of the insulation.

(g) SPF insulation shall be installed without gaps.

(h) SPF insulation shall be fully adhered and self-supporting so that it will remain in place.

NOTE:

Filling of Framed Assemblies: ccSPF insulation is not required to fill the cavities of framed assemblies provided the installed thickness of insulation conforms to compliance documentation and that the bottom and top plates of vertical framing and both ends of horizontal framing, including band and rim joists, are sprayed to completely fill the cavity adjacent to and in contact with the framing to a distance of 2.0 inches away from the framing for ocSPF insulation, or filled to the thickness meeting ASTM testing as an air barrier.

Filling of Framed Assemblies: ocSPF insulation shall completely fill cavities of 2x4 inch framing or less. Cavities greater than 2x4 inch framing dimensions may be filled to the thickness that meets the required R-value used for compliance provided that the bottom and top plates of vertical framing and both ends of horizontal framing, including band and rim joists, are sprayed to completely fill the cavity adjacent to and in contact with the framing to a distance of 5.5 inches away from the framing for ocSPF insulation, or filled to the thickness meeting ASTM testing as an air barrier.

Air Barrier: ccSPF installed as an air barrier shall be 2.0 inches in thickness. ocSPF installed as an air barrier shall be a minimum of 5.5 inches in thickness. Alternatively, ccSPF and ocSPF insulation shall be installed at a thickness that meets an air permeance no greater than 0.02 L/s-m^2 at 75 Pa pressure differential when tested in accordance to ASTM E2178 or ASTM E283.

RA3.5.6.2.6 Special Situations--HVAC/Plumbing Closet

Walls of interior closets for HVAC and/or water heating equipment that require combustion air venting, shall be insulated to at least the same R-value as the other demising walls (i.e., walls separating conditioned space and attached garage), or as specified on the Certificate of Compliance.

RA3.5.6.2.7 Special Situations--Double Walls and Framed Bump-Outs

(a) Insulation shall fill the entire cavity; or, an additional air barrier shall be installed inside the double wall or bump-out and in contact with the insulation so that the insulation fills the cavity formed with the additional air barrier.

(b) Entire double walls and framed bump-outs shall be air tight.

RA3.5.6.2.8 Special Situations--Structural Bracing, Tie-downs, Steel Structural Framing

(a) Framing and bracing used for structural purposes shall be identified on plan documents with diagrams and/or design drawings.

(b) Insulation shall be installed in a manner that restricts thermal bridging through the structural framing assembly.

(c) Insulation shall be applied to fully enclose and/or adhere to all sides and ends of structural assembly framing that separate conditioned from unconditioned space.

(d) The structural portions of assemblies shall be air-tight.

RA3.5.6.2.9 Special Situations--Window and Door Headers

(a) All single-member window and door headers shall be insulated to a minimum of R-3 for a 2x4 framing, or equivalent width, and a minimum of R-5 for all other assemblies. Insulation is to be placed between the interior face of the header and inside surface of the interior wall finish.

(b) No header insulation is required for single-member headers that are the same width as the wall, provided that the entire wall has at least R-2 insulation.

RA3.5.6.2.10 Special Situations--Gable Ends in Unvented Attics

(a) In unvented attics, where insulation is applied directly to the underside of the roof deck, framing for gable ends that separate the unvented attic from unconditioned space shall be insulated to meet or exceed the wall R-value of the adjacent exterior wall construction as specified on the Certificate of Compliance.

(b) The backside of air permeable insulation exposed to the unconditioned attic space shall be completely covered with a continuous air barrier.

RA3.5.6.3 Roof/Ceilings

(a) SPF insulation shall be applied to fully adhere to the substrate of the ceiling or roof deck.

(b) SPF insulation shall be applied to fully adhere to the joist and other framing faces to form a complete air seal within the construction cavity.

(c) SPF insulation shall be spray-applied to fully adhere to and seal around wiring and plumbing.

(d) Hard covers shall be placed over all drop ceiling areas and interior wall cavities to keep insulation in place and stop air movement. If hard covers, they shall be in place before insulation is installed.

(e) In vented attics, required eave ventilation shall not be obstructed; the net free-ventilation area of the eave vent shall be maintained.

(f) In unvented attics where SPF is applied directly to the underside of the roof deck, all gable end areas shall be insulated to the same R-value as the walls and as specified on compliance documentation. It is not necessary to place hard covers over drop ceilings and interior wall cavities in this situation.

(g) All recessed light fixtures that penetrate the ceiling shall be listed for zero clearance insulation contact (IC), have a label that certifies it as airtight with leakage less than 2.0 cfm @ 75 Pa when tested to ASTM E283, and shall be sealed with a gasket or caulk between the light's housing and the ceiling.

(h) SPF insulation shall not be applied directly to recessed luminaires unless the recessed luminaire is rated for SPF insulation contact (SPCL) appropriate for use with polyurethane spray foam in accordance with NEMA LE 7-2015. -Recessed light fixtures not rated for SPF insulation contact (SPCL) and insulated with SPF insulation shall be separated from the spray foam by a suitable barrier or box as directed in NEMA LSD 57-2018. In a cathedral ceiling

installation, where SPF is applied above the luminaire, but not encasing it with foam, the luminaire shall have a minimum ½-inch air space between the two components.

(i) SPF insulation shall be kept away from combustion appliance flues in accordance with flue manufacturers' installation instructions or labels on the flue for clearance.

RA3.5.6.3.1 Special Situations--Enclosed Rafter Ceilings

SPF insulation installed in unvented rafter ceilings or to the underside of unvented roofs with an attic below shall have an R-value conforming to compliance documentation and the air barrier shall be uniform across the transition of roof to wall. The insulation shall be in contact with the air barrier.

RA3.5.6.3.2 Special Situations--Attics and Cathedral Ceilings

In attics where entry is made for the service of utilities, SPF shall be protected from ignition in accordance with CBC, Part 2, Section 2603, and Part 2.5, Section R316.

RA3.5.6.3.3 Special Situations--HVAC Platform

A minimum of 3 inches of ccSPF insulation or 5.3 inches of ocSPF shall be placed below any platform or cat-walk access ways installed in vented attics for HVAC equipment or other needs. The overall assembly R-value shall meet the required R-values specified in the compliance documentation.

RA3.5.6.3.4 Special Situations--Attic Access

A minimum of 3 inches of ccSPF or 5.3 inches of ocSPF insulation shall be applied to the access door assuring good adhesion to the door surface. Alternatively, permanently attach rigid foam or batt insulation with adhesive or mechanical fastener. The overall assembly R-value shall meet the required values specified in the compliance documentation.

RA3.5.6.4 Raised Floors

(a) SPF insulation shall be spray-applied to fully adhere to the bottom side of the floor sheathing.

(b) SPF insulation shall uniformly cover the cavity side-to-side and end-to-end.

RA3.5.6.4.1 Homes with Floors Over Garage

(a) SPF insulation shall be spray-applied to fully adhere to the bottom side of the floor sheathing.

(b) SPF insulation installation shall uniformly cover the cavity side-to-side and end-to-end.

RA3.5.6.4.2 Homes with Conditioned Space Over Garage

The separation between conditioned space (house) and the garage shall be insulated by spraying SPF insulation to create a continuous thermal barrier. All rim and band joists adjoining conditioned space shall be air tight and insulated.

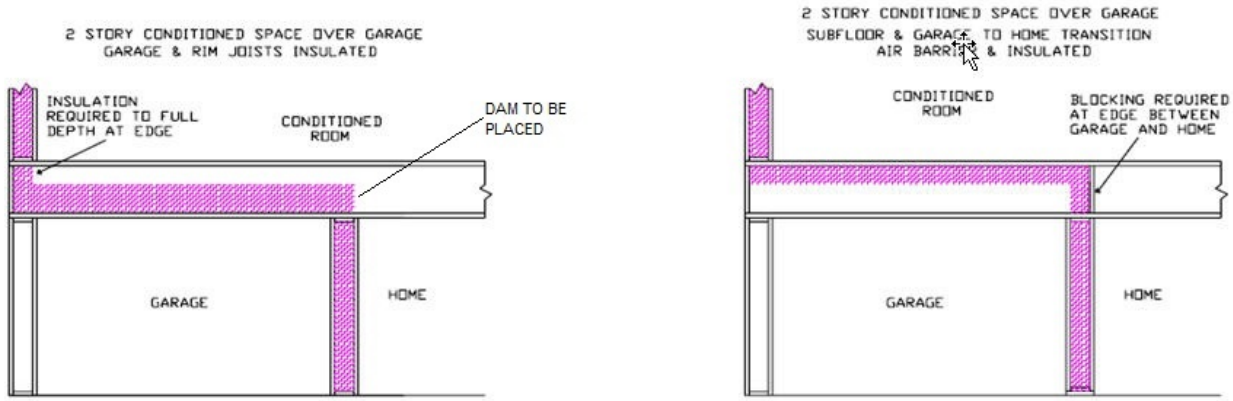

Figure RA3.5-7 Homes with Conditioned Space Over Garage – Spray Polyurethane Foam Insulation

RA3.5.6.4.3 Homes with No Conditioned Space Over Garage

The band joist where the garage transitions to an attic above conditioned space shall have an air barrier installed in contact with the edge of the attic insulation.

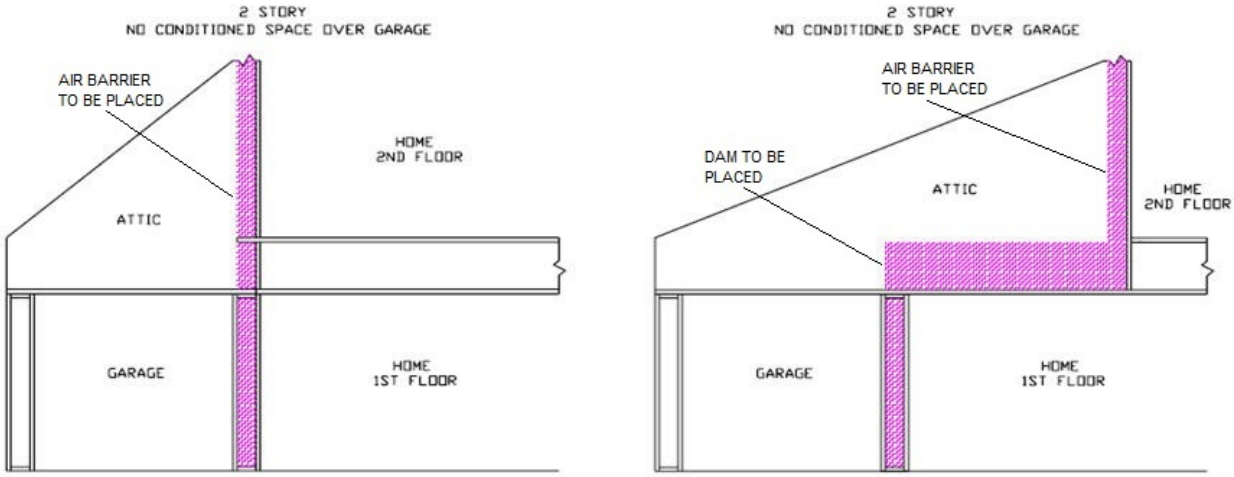

Figure RA3.5-8 Homes with No Conditioned Space Over Garage – Spray Polyurethane Foam Insulation

RA3.5.7 STRUCTURAL INSULATED PANEL (SIP)

These procedures detail the installation and inspection protocols necessary to qualify for Quality Insulation Installation (QII) of Structural Insulated Panel (SIP) systems. These procedures must be field verified before the building construction permit is finalized.

These procedures are to be followed by the SIP installer and a qualified Home Energy Rating System (HERS) rater must verify its conformance for meeting the requirements of Sections 150.1(c) and 110.7 of the Standards.

RA3.5.7.1 Thermal Specification

This insulation type is a composite building material manufactured with an internal insulating layer of rigid insulation of sheet or board material, or from cured spray polyurethane foam insulation material. The internal insulation is sandwiched between two layers of structural board, usually referred to as a "panel." The result is "panelized" construction versus traditional framed construction. SIPs combine several components of conventional building, such as studs and joists, insulation, vapor retarder and air barrier. They can be used for different applications, such as exterior walls, roofs, and floors. Examples of common SIP sizes are panels ranging in length from 4x8 feet to 4x24 feet and having core thickness of 3 1/2 inches to 11 1/2 inches, depending on the manufacturer. Panels are typically cut at the manufacturing facility to precisely fit the building's design characteristics. Openings for windows and doors are cut into one or more panels, and often small chases are provided within the internal insulation for electrical wiring and plumbing.

SIPs can be used for the entire building envelope or for individual assemblies, such as for just walls or just floors. In these situations, the SIP system will used in conjunction with other traditional insulation materials installed within cavities of framed assemblies. The R-value of a SIP is dependent on the type of material used internally for insulation and the overall thickness of the panel. Specific product R-values are readily available from the manufacturer and for the specific materials being installed. The R-value of the product is typically marked on the product. The installed insulation must meet the R-value stated on the compliance documentation.

RA3.5.7.1.1 Requirements for Walls, Ceilings and Floors

(a) Materials shall comply with, and be installed in conformance with, all applicable building codes for building. California Building Code (including, but not limited to, California Electric Code Section 719) and installed to meet all applicable fire codes.

(b) Materials shall meet California Quality Standards for Insulating Material, Title 24, Part 12, Chapter 4, Article 3, listed in the California Department of Consumer Affairs Consumer Guide and Directory of Certified Insulating Materials.

(c) Materials shall comply with flame spread rating and smoke density requirements of Chapter 26 and Section 706 of the Title 24, Part 2: all installations with exposed facings must use fire retardant facings which have been tested and certified not to exceed a flame spread index (FSI) of 25 and a smoke development index (SDI) of 450. Insulation facings that do not touch a ceiling, wall, or floor surface, and faced batts on the undersides of roofs with an air space between the ceiling and facing are considered exposed applications.

(d) Materials shall be installed according to manufacturer specifications and instructions.

(e) SIP systems are considered an air barrier; however extension of the air barrier shall be made across all interconnections of panels, at window and door openings, and at all adjoining surfaces of different panel areas (i.e., where SIP walls adjoin the floor and roof/ceiling).

RA3.5.7.1.2 R-value Measurement Equipment

The HERS raters shall verify the installed thickness of insulation in all SIP panels and locations on walls, roof/ceilings, and floors, and to ensure that insulation levels and installation integrity meet the R-value specified on the Certificate of Compliance, and all other required compliance documentation.

RA3.5.7.1.3 Certificates

All provisions of Residential Appendix RA2 shall be met. An Insulation Certificate of Installation signed by the installer shall be provided that states the installation is consistent with the Certificate of Compliance, plans and specifications for which the building permit was issued. The SIP installer shall also complete the applicable sections of the Certificate of Installation form and attach a product specification or data sheet for every insulation material used.

RA3.5.7.1.4 Certificates and Availability

All provisions of Residential Appendix RA2 shall be met. The Insulation Certificate of Installation, with insulation material labels or specification/data sheets attached, signed by the SIP installer, shall be available on the building site for each of the HERS rater's verification inspections. Note: The HERS rater cannot verify compliance credit without these completed forms.

RA3.5.7.2 Wall Insulation

(a) Connections of wall panels shall be sealed, caulked, foamed, or taped (i.e., SIP tape) to provide a substantially air-tight envelope to the outdoors, attic, garage and crawl space. All plumbing and wiring penetrations through the top and bottom of panels, and electrical boxes that penetrate the SIP sheathing shall be sealed. All gaps in the air barrier shall be caulked, or sealed with minimally expansive foam or taped (i.e., SIP tape).

(b) Bottom connections of wall panels shall be sealed to the ground subfloor or slab, and above ground subfloor.

(c) Insulation shall uniformly fit across the plane of the wall and taping (i.e., SIPs tape), caulking or sealing of all joints and seams of panel joints (i.e., spline connections) shall be maintained to be considered as the air barrier.

RA3.5.7.2.1 Special Situations--Obstructions

(a) Penetrations and obstructions to the SIP shall be completely caulked and sealed.

(b) Insulation shall fill between the sheathing and the rear of electrical boxes and phone boxes.

RA3.5.7.2.2 Special Situations--Rim Joists

(a) All rim-joists shall be insulated to the same R-value as the adjacent walls.

(b) The insulation shall be installed without gaps and voids.

RA3.5.7.2.3 Special Situations--Kneewalls and Skylight Shafts

(a) Framing for kneewalls and skylight shafts that separate conditioned from unconditioned space shall be insulated to meet or exceed the wall R-value specified on the Certificate of Compliance, and all other required compliance documentation.

(b) Steel-framed kneewalls and skylight shafts, shall meet or exceed the mandatory minimum insulation requirements and external surfaces of steel studs shall be covered with insulation unless otherwise specified on the Certificate of Compliance using correct U-factors from Joint Appendix JA4, Table 4.3.4 (or U-factors approved by the Commission Executive Director).

(c) The backside of air permeable insulation exposed to the unconditioned attic space shall be completely covered with a continuous air barrier.

RA3.5.7.2.4 Special Situations--HVAC/Plumbing Closet

Walls of interior closets for HVAC and/or water heating equipment, which require combustion air venting, shall be insulated to at least the same R-value as the other demising walls (i.e., walls separating conditioned space and attached garage), or as specified on the Certificate of Compliance.

RA3.5.7.2.5 Special Situations--Double Walls and Framed Bump-Outs

(a) Insulation shall fill the entire cavity; or, an additional air barrier shall be installed inside the double wall or bump-out and in contact with the insulation so that the insulation fills the cavity formed with the additional air barrier.

(b) Entire double walls and framed bump-outs shall be air tight.

RA3.5.7.2.6 Special Situations--Structural Bracing, Tie-downs, Steel Structural Framing

(a) Framing and bracing used for structural purposes shall be identified on plan documents with diagrams and/or design drawings.

(b) Insulation shall be installed in a manner that restricts thermal bridging through the structural framing assembly.

(c) Insulation shall be applied to fully enclose and/or adhere to all sides and ends of structural assembly framing.

(d) The structural portions of assemblies shall be air-tight.

RA3.5.7.2.7 Special Situations--Window and Door Headers

All single-member window and door headers shall be insulated to a minimum of R-3 for a 2x4 framing, or equivalent width, and a minimum of R-5 for all other assemblies. Insulation is to be placed between the exterior face of the header and inside surface of the finish wall material.

RA3.5.7.2.8 Special Situations—Gable Ends in Unvented Attics

(a) In unvented attic, where insulation is applied directly to the underside of the roof deck, framing for gable ends that separate the unvented attic from unconditioned space shall be

insulated to meet or exceed the wall R-value of the adjacent exterior wall construction as specified on the Certificate of Compliance.

(b) The backside of air permeable insulation exposed to the unconditioned attic space shall be completely covered with a continuous air barrier.

RA3.5.7.3 Roof/Ceilings

(a) Baffles shall be placed at eaves or soffit vents of vented attics to keep insulation from blocking eave ventilation and prevent air movement under the insulation. The required net free-ventilation shall be maintained.

(b) Hard covers or draft stops shall be placed over all drop ceiling areas and interior wall cavities to keep insulation in place and stop air movement. If hard covers or draft stops are missing or incomplete, they shall be completed before insulation is installed.

(c) In traditional framed attics, required eave ventilation shall not be obstructed for conventional attics – the net free-ventilation area of the eave vent shall be maintained. Eave vent baffles shall be installed to prevent air movement under or into the ceiling insulation of conventional attics.

(d) Insulation shall cover all recessed lighting fixtures. If the fixtures are not rated for zero clearance insulation contact (IC) and air tight, the fixture shall be removed and/or replaced.

(e) All recessed light fixtures that penetrate the ceiling shall be listed for zero clearance insulation contact (IC), have a label that certifies it as air tight with leakage less than 2.0 cfm at 75 Pa when tested to ASTM E283, and shall be sealed with gasket or caulk between the light's housing and the ceiling.

RA3.5.7.3.1 Special Situations--Attics and Cathedral Ceilings

Insulation installed in unvented rafter ceilings or to the underside of unvented roofs with an attic below shall have an R-value conforming to compliance documentation and the air barrier shall be uniform across the transition of roof to wall. The insulation shall be in contact with the air barrier.

RA3.5.7.3.2 Special Situations--HVAC Platform

Insulation shall be placed below any platform or cat-walk for HVAC equipment installation and access, as specified on the Certificate of Compliance.

RA3.5.7.3.3 Special Situations--Attic Access

Permanently attach rigid board insulation, batt or blanket insulation, or SIP with the appropriate R-value to the access door using adhesive or mechanical fastener. The bottom of the attic access shall be gasketed to prevent air leakage of conditioned air to the unconditioned attic.

RA3.5.7.4 Raised Floors

SIPs air barrier shall be maintained through use of SIP tape, or sealing and caulking between panels and at all spline joints.

RA3.5.7.4.1 Homes with Floors Over Garage

On floors that are over garages, the rim joist shall be insulated.

RA3.5.7.4.2 Homes with Conditioned Space Over Garage

The separation between conditioned space (house) and the garage shall be insulated to create a continuous thermal barrier. All rim and band joists adjoining conditioned space shall be air tight and insulated.

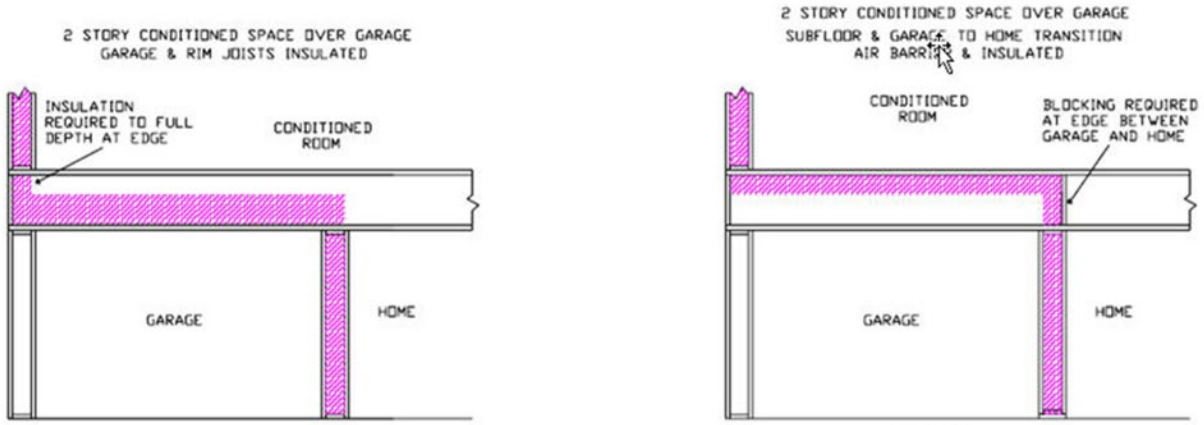

Figure RA3.5-9 Homes with Conditioned Space Over Garage – Structural Insulated Panel (SIP)

RA3.5.7.4.3 Homes with No Conditioned Space Over Garage

The band joist where the garage transitions to an attic above conditioned space shall have an air barrier installed in contact with the edge of the attic insulation.

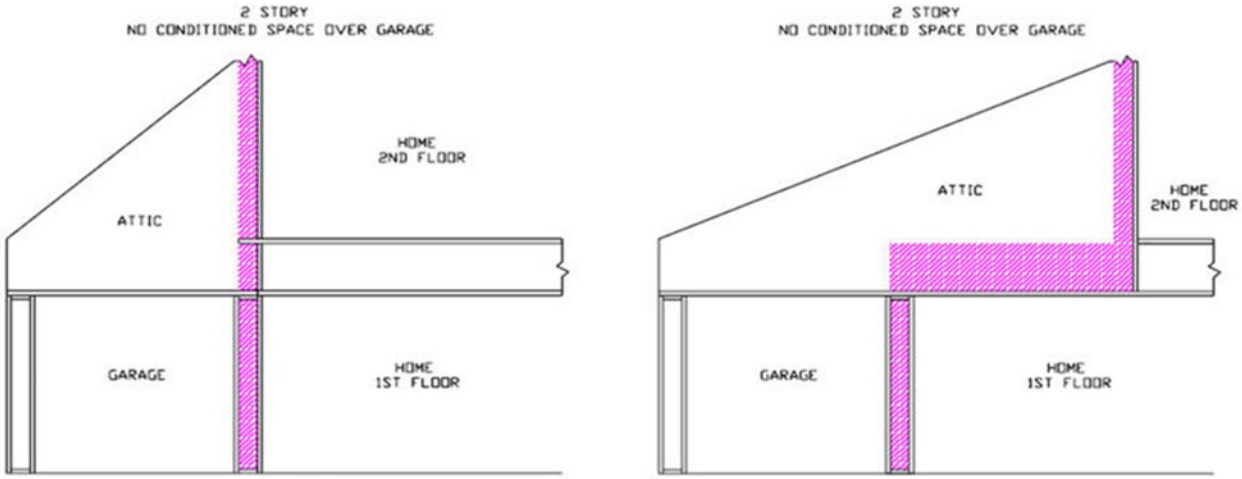

Figure RA3.5-10 Homes with No Conditioned Space Over Garage – Structural Insulated Panel (SIP)

RA3.5.8 INSULATED CONCRETE FORM (ICF)

These procedures detail the installation and inspection protocols necessary to qualify for Quality Insulation Installation (QII) of insulated concrete forms (ICFs). These procedures must be field verified before the building construction permit is finalized.

These procedures are to be followed by the insulation installer and a qualified Home Energy Rating System (HERS) rater must verify its conformance for meeting the requirements of Sections 150.1(c) and 110.7 of the Standards.

RA3.5.8.1 Thermal Specification

Conventional concrete and concrete masonry unit (CMU) walls, floors and roofs can be insulated on the inside, on the outside, or have insulation between two layers of concrete (i.e., sandwich panel walls/block walls). ICFs are typically single forming masonry blocks with insulation to improve the thermal resistance of the material. ICFs are manufactured in conventional CMU dimensions of 6 inch, 8 inch, 10 inch, and larger widths. Insulated concrete forms (ICFs) typically have a layer of insulation located: (1) within the inner core of the concrete masonry unit; or, (2) on one or all sides surrounding an inner core of concrete.

A similar type of insulated concrete form system is autoclaved aerated concrete (AAC) which has an air void matrix rather than sand and gravel commonly used in conventional concrete. The density range of AAC is 30 to 50 pounds per cubic foot (pcf) compared to conventional concrete used with ICFs with a density of approximately 80 to 140 pounds per cubic foot (pcf).

The R-value of ICFs is dependent on the type of insulation material used and its thickness. Insulation used within the inner core of ICFs can be: (1) poured-in-place vermiculite or perlite; (2) foamed-in-place spray polyurethane foam insulation material; or, (3) standard molded insulation inserts of rigid board insulation material. Insulation used to make up one or more of the outer layers of the ICF is a rigid board insulation material. Specific product R-values are readily available from the manufacturer for the specific materials being installed. R-value of the product is typically marked on the product. The installed insulation must meet the R-value stated on the compliance documentation.

RA3.5.8.1.1 Requirements for Walls, Ceilings and Floors

(a) Materials shall comply with, and be installed in conformance with, all applicable building codes for building. California Building Code (including, but not limited to, California Electric Code Section 719) and installed to meet all applicable fire codes.

(b) Materials shall meet California Quality Standards for Insulating Material, Title 24, Part 12, Chapter 4, Article 3, listed in the California Department of Consumer Affairs Consumer Guide and Directory of Certified Insulating Materials.

(c) Materials shall comply with flame spread rating and smoke density requirements of Chapter 26 and Section 706 of the Title 24, Part 2: all installations with exposed facings must use fire retardant facings which have been tested and certified not to exceed a flame spread index (FSI) of 25 and a smoke development index (SDI) of 450. Insulation facings that do not touch a

ceiling, wall, or floor surface, and faced batts on the undersides of roofs with an air space between the ceiling and facing are considered exposed applications.

(d) Materials shall be installed according to manufacturer specifications and instructions.

(e) ICF systems are considered an air barrier; however extension of the air barrier shall be made across all interconnections of window and door openings, and at all adjoining surfaces of exterior envelope assemblies of different materials (i.e., where ICF walls adjoin framed floors and roof/ceilings).

RA3.5.8.1.2 R-value Measurement Equipment

The HERS raters shall verify the installed type and thickness of insulation in the ICF system being used for walls, roof/ceilings, and floors, and to ensure that insulation levels and installation integrity meet the R-value specified on the Certificate of Compliance, and all other required compliance documentation.

RA3.5.8.1.3 Certificates

All provisions of Residential Appendix RA2 shall be met. An Insulation Certificate of Installation signed by the installer shall be provided that states the installation is consistent with the Certificate of Compliance, plans and specifications for which the building permit was issued. The ICF installer shall also complete the applicable sections of the Certificate of Installation form and attach a product specification or data sheet for every insulation material used.

RA3.5.8.1.4 Certificates and Availability

All provisions of Residential Appendix RA2 shall be met. The Insulation Certificate of Installation, with insulation material labels or specification/data sheets attached, signed by the ICF installer, shall be available on the building site for each of the HERS rater's verification inspections. Note: The HERS rater cannot verify compliance credit without these completed forms.

RA3.5.8.2 Wall Insulation

(a) Connections of ICF walls shall be grouted and sealed meeting manufacturer's specifications. All plumbing and wiring penetrations through the top and bottom of the ICF, and electrical boxes that penetrate the plane of the ICF shall be sealed. All gaps between interconnecting envelope assemblies of different materials shall have air barrier caulked, or sealed with minimally expansive foam or taped.

(b) Bottom connections of ICFs shall be sealed to the ground subfloor or slab, and above ground subfloor.

(c) Insulation shall uniformly fit across the plane of the wall and taping, caulking or sealing of all joints and seams of the ICF shall be maintained to be considered as the air barrier.

RA3.5.8.2.1 Special Situations--Obstructions

(a) Penetrations and obstructions to the ICF shall be completely caulked and sealed.

(b) Insulation shall fill between the sheathing and the rear of electrical boxes and phone boxes.

RA3.5.8.2.2 Special Situations--Rim Joists

(a) All rim-joists shall be insulated to the same R-value as the adjacent walls.

(b) The insulation shall be installed without gaps and voids.

RA3.5.8.2.3 Special Situations--Kneewalls and Skylight Shafts

(a) Framing for kneewalls and skylight shafts that separate conditioned from unconditioned space shall be insulated to meet or exceed the wall R-value specified on the Certificate of Compliance, and all other required compliance documentation.

(b) Steel-framed kneewalls and skylight shafts, shall exceed the mandatory minimum insulation requirements and external surfaces of steel studs shall be covered with insulation unless otherwise specified on the Certificate of Compliance using correct U-factors from Joint Appendix JA4, Table 4.3.4 (or U-factors approved by the Commission Executive Director).

(c) The backside of air permeable insulation exposed to the unconditioned attic space shall be completely covered with a continuous air barrier.

RA3.5.8.2.4 Special Situations--HVAC/Plumbing Closet

Walls of interior closets for HVAC and/or water heating equipment, which require combustion air venting, shall be insulated to at least the same R-value as the other demising walls (i.e., walls separating conditioned space and attached garage), or as specified on the Certificate of Compliance.

RA3.5.8.2.5 Special Situations--Double Walls and Framed Bump-Outs

(a) Insulation shall fill the entire cavity; or, an additional air barrier shall be installed inside the double wall or bump-out and in contact with the insulation so that the insulation fills the cavity formed with the additional air barrier.

(b) Entire double walls and framed bump-outs shall be air tight.

RA3.5.8.2.6 Special Situations--Structural Bracing, Tie-downs, Steel Structural Framing

(a) Framing and bracing used for structural purposes shall be identified on plan documents with diagrams and/or design drawings.

(b) Insulation shall be installed in a manner that restricts thermal bridging through the structural framing assembly.

(c) Insulation shall be applied to fully enclose and/or adhere to all sides and ends of structural assembly framing.

(d) The structural portions of assemblies shall be air-tight.

RA3.5.8.2.7 Special Situations--Window and Door Headers

All window and door headers shall be insulated to a minimum of R-3 between the exterior face of the header and inside surface of the finish wall material.

RA3.5.8.2.8 Special Situation—Gable Ends in Unvented Attics

(a) In unvented attics, where insulation is applied directly to the underside of the roof deck, framing for gable ends that separate the unvented attic from unconditioned space shall be insulated to meet or exceed the wall R-value of the adjacent exterior wall construction as specified on the Certificate of Compliance.

(b) The backside of air permeable insulation exposed to the unconditioned attic space shall be completely covered with a continuous air barrier.

RA3.5.8.3 Roof/Ceilings

(a) Baffles shall be placed at eaves or soffit vents of vented attics to keep insulation from blocking eave ventilation and prevent air movement under the insulation. The required net free-ventilation shall be maintained.

(b) Hard covers or draft stops shall be placed over all drop ceiling areas and interior wall cavities to keep insulation in place and stop air movement. If hard covers or draft stops are missing or incomplete, they shall be completed before insulation is installed.

(c) In traditional framed attics, required eave ventilation shall not be obstructed for conventional attics - the net free-ventilation area of the eave vent shall be maintained. Eave vent baffles shall be installed to prevent air movement under or into the ceiling insulation of conventional attics.

(d) Insulation shall cover all recessed lighting fixtures. If the fixtures are not rated for insulation contact (IC) and air tight, the fixtures shall be removed and/or replaced.

(e) All recessed light fixtures that penetrate the ceiling shall be listed for zero clearance insulation contact (IC), have a label that certifies it as airtight with leakage less than 2.0 cfm @ 75 Pa when tested to ASTM E283, and shall be sealed with a gasket or caulk between the light's housing and the ceiling.

RA3.5.8.3.1 Special Situations--Attics and Cathedral Ceilings

Insulation installed in unvented rafter ceilings or to the underside of unvented roofs with an attic below shall have an R-value conforming to compliance documentation and the air barrier shall be uniform across the transition of roof to wall. The insulation shall be in contact with the air barrier.

RA3.5.8.3.2 Special Situations--HVAC Platform

Insulation shall be placed below any platform or cat-walk for HVAC equipment installation and access.

RA3.5.8.3.3 Special Situations--Attic Access

Permanently attach rigid board insulation, batt or blanket insulation with the appropriate R-value to the access door using adhesive or mechanical fastener. The bottom of the attic access shall be gasketed to prevent air leakage of conditioned air to the unconditioned attic.

RA3.5.8.4 Raised Floors

The outer and inner face, and all joints of the ICF air barrier, shall be maintain through use of tape, or sealing and caulking as needed.

RA3.5.8.4.1 Homes with Floors Over Garage

On floors that are over garages, the rim joist shall be insulated.

RA3.5.8.4.2 Homes with Conditioned Space Over Garage

The separation between conditioned space (house) and the garage shall be insulated to create a continuous thermal barrier. All rim and band joists adjoining conditioned space shall be air tight and insulated.

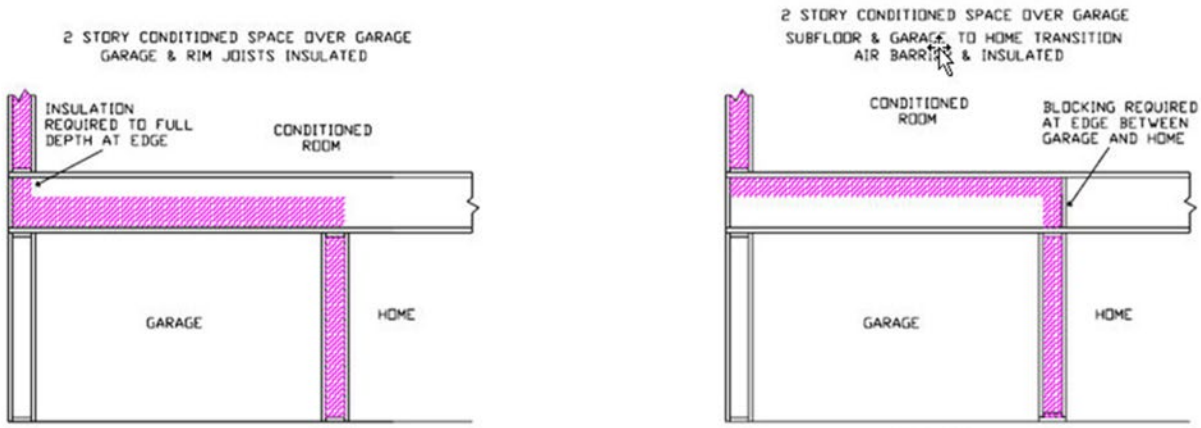

Figure RA3.5-11 Homes with Conditioned Space Over Garage – Insulated Concrete Form (ICF)

RA3.5.8.4.3 Homes with No Conditioned Space Over Garage

The band joist where the garage transitions to an attic above conditioned space shall have an air barrier installed in contact with the edge of the attic insulation.

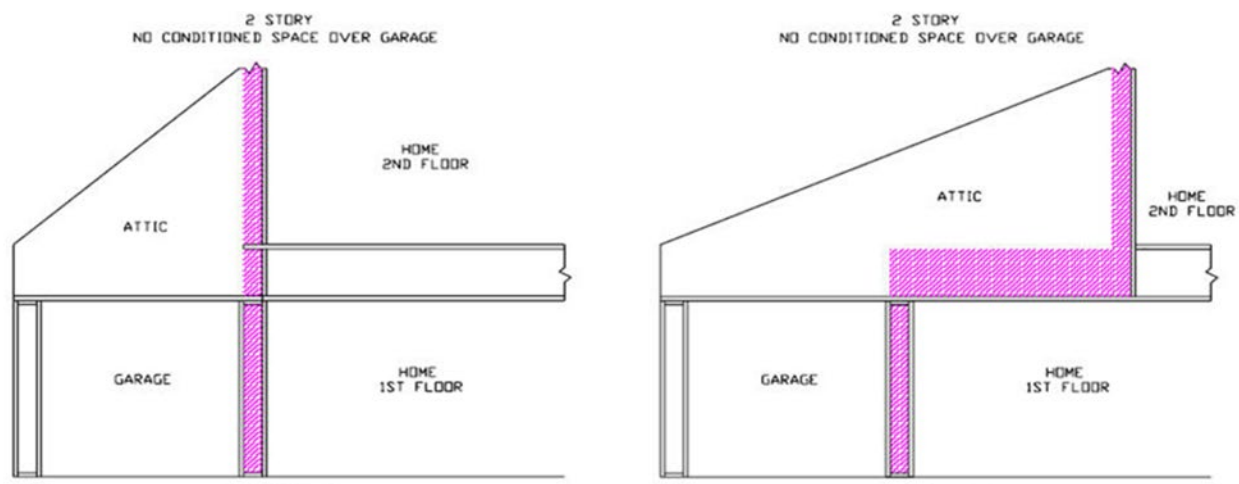

Figure RA3.5-12 Homes with No Conditioned Space Over Garage – Insulated Concrete Form (ICF)

RA3.6 Field Verification of Water Heating Systems

RA3.6.1 Purpose and Scope

Water Heating HERS field verification offers credits for improved performance in terms of "quality" pipe insulation installation, for the installation of field-verified hot water distribution systems that are more compact and therefore perform better than typical hot water distribution systems and for the installation of specific circulation strategies. The listed HERS measures can be completed on a sampling basis.

RA3.6.2 HERS-Verified Pipe Insulation Requirements for all Hot Water Distribution Systems

Unless otherwise stated, insulation must meet the requirements specified in §150.0(j). Pipe insulation shall fit tightly to the pipe and all elbows and tees shall be fully insulated. No piping should be visible due to insulation voids with the exception of the last segment of piping that penetrates walls and delivers hot water to the sink, appliance, etc. All domestic hot water piping shall be insulated as specified in Section 609.11 of the California Plumbing Code. In addition, the following piping conditions shall have a minimum insulation wall thickness of 1 inch:

(a) The first five feet of cold water piping from storage gas water heaters.

(b) All hot water piping with a nominal diameter between 3/4 inch (19 millimeter) and 1 inch.

(c) All hot water piping less than 3/4 inch in diameter that is associated with a domestic hot water recirculation system or leading to the kitchen fixtures.

(d) All underground hot water piping.

1. In addition, all piping below grade must be installed in a waterproof and non-crushable casing or sleeve that allows for installation, removal and replacement of the enclosed pipe and insulation. The internal cross-section or diameter of the casing or sleeve shall be large enough to allow for insulation of the hot water piping.

(e) Piping from the heating source to storage tank or between tanks.

Pipe insulation may be omitted where hot water distribution piping is buried within attic, crawlspace or wall insulation, as described below: In attics and crawlspaces the insulation shall completely surround the pipe with at least 1 inch of insulation and the pipe shall be completely covered with at least 4 inches of insulation further away from the conditioned space. In walls, the insulation must completely surround the pipe with at least 1 inch of insulation. If burial within the insulation does not meet these specifications, then this exception does not apply, and the section of pipe not meeting the specifications must be insulated as specified in §150.0(j).

RA3.6.3 HERS-Verified Pipe Insulation Credit (PIC-H)

The visual inspection shall verify that all hot water piping is insulated. This credit can only be taken for trunk and branch hot water distribution systems. Specific installation requirements include:

1. The HERS rater shall verify that all hot water piping is insulated in accordance with the provisions in RA3.6.2 HERS-Verified Pipe Insulation Requirements for all Hot Water Distribution Systems.

RA3.6.4 HERS-Verified Central Parallel Piping (PP-H)

This measure expands on the requirements for parallel piping systems that use one or more central manifolds with individual runs from the manifold to each point of use. Visual inspection shall verify that all supply lines of the parallel piping system meet the specific installation requirements listed below:

(a) The measured length of pipe from the water heater to each central manifold shall not exceed 5 feet (measured to the nearest half foot).

(b) The hot water distribution system piping from the manifold to the fixtures and appliances must take the most direct path. For example, in a house with more than 1-story and the water heater in the garage, this requirement would exclude running hot water supply piping from the manifold to the attic, and then running the line back down to a first floor point of use.

1. The hot water distribution piping must be separated by at least two inches from any other hot water supply piping, and at least six inches from any cold water supply piping.

(c) The HERS inspector shall also verify that other hot water piping is insulated and installed to meet the requirements of RA3.6.2.

RA3.6.5 HERS-Verified Compact Hot Water Distribution System Expanded Credit (CHWDS-H-EX)

To meet the Compact Hot Water Distribution System Expanded Credit eligibility requirements, the requirements in RA4.4.6 must be met. In addition, the following HERS field verifications are required:

(a) No hot water piping larger than 1 inch diameter is allowed,

(b) Length of 1 inch diameter piping is limited to 8 ft or less,

(c) Two and three story buildings cannot have hot water distribution piping in the attic, unless the water heater is also located in the attic, and

(d) Eligible recirculating systems must be HERS-Verified Demand Recirculation: Manual Control conforming to RA4.4.17.

RA3.6.6 HERS Verified Demand Recirculation; Manual Control (R-DRmc-H)

Demand controlled recirculation systems shall operate “on-demand”, meaning that pump operation shall be initiated shortly prior to the hot water draw. The recirculation pump can be located external to the water heater or be integral to the water heater. The controls shall operate on the principal of shutting off the pump with a sensed rise in pipe temperature (Delta-T). For this HERS verification process, a manual switch is required.

Verification shall include:

(a) More than one circulation loop may be installed. Each loop shall have its own pump and controls.

(b) Verify that the pump, demand controls and thermo-sensor are present. Manual switches shall be located in the kitchen, all bathrooms, and any hot water fixture location that is at least 20 feet (measured along the hot water piping) from the water heater.

(c) Manual controlled systems may be activated by wired or wireless button mechanisms. Verify that manual controls have standby power of 1 watt or less.

(d) Verify that pump and control placement for the demand recirculation meets one of the following criteria:

1. When a dedicated return line has been installed the pump, controls and thermo-sensor are installed at the end of the supply portion of the recirculation loop (typically under a sink); or
2. The pump and controls are installed on the return line near the water heater and the thermo-sensor is installed in an accessible location as close to the end of the supply portion of the recirculation loop as possible (typically under a sink), or
3. When the cold water line is used as the return, the pump, demand controls and thermosensor shall be installed in an accessible location at the end of supply portion of the hot water distribution line (typically under a sink).

(e) Verify that a check valve is installed in the recirculation loop to prevent unintentional circulation of the water (thermo-siphoning) and back flow when the system is not operating. This check valve may be included with the pump.

(f) The HERS inspector shall also verify that the supply portion of each circulation loop, the first five feet of branches off the loop and the dedicated return line are insulated based on the conductivity range in TABLE 120.3-A, the insulation level shall be selected from the fluid temperature range based on the thickness requirements in TABLE 120.3-A and the insulation shall be installed in accordance with RA3.6.2. Other hot water piping shall meet the requirements of §150.0(j) and be installed in accordance with RA3.6.2. Insulation is not required on the cold water line when it is used as the return.

(g) The hot water distribution system piping from the water heater(s) to the fixtures and appliances must take the most direct path. For example, in a house with more than 1-story and the water heater in the garage, this requirement would exclude running hot water supply piping from the water heater to the attic, and then running the line back down to a first floor point of use.

(h) Verify that manual controls initiate pump operation by pressing one of the manual controls and observing that the pump turns on and then shuts off in accordance with one of the two methods listed:

1. After the pump has been activated, the controls shall allow the pump to operate until the water temperature at the thermo-sensor rises not more than 10ºF (5.6 ºC) above the initial temperature of the water in the pipe, or
2. The controls shall not allow the pump to operate when the temperature in the pipe exceeds 102ºF (38.9 ºC).

(i) Verify that the controls have a feature that limits pump operation to a maximum of 5 minutes following any activation. This is provided in the event that the normal means of shutting off the pump have failed.

(j) The manufacturer(s) of the recirculation pump and the controls shall provide installation and operation instructions that provide details of the operation of the pump and controls and such instructions shall be available at the jobsite for inspection.

RA3.6.7 HERS-Verified Demand Recirculation: Sensor Control (RDRsc-H)

Demand controlled recirculation systems shall operate "on-demand", meaning that pump operation shall be initiated shortly prior to the hot water draw. The recirculation pump can be located external to the water heater or be integral to the water heater. The controls shall operate on the principal of shutting off the pump with a sensed rise in pipe temperature (Delta-T). For this HERS verification process a sensor control is used to activate the pump rather than a manual control.

Verification shall include:

(a) More than one circulation loop may be installed. Each loop shall have its own pump and controls.

(b) Verify that the pump, demand controls and thermo-sensor are present. Sensor controls shall be located in the kitchen, bathrooms, and any hot water fixture location that is at least 20 feet (measured along the hot water piping) from the water heater.

(c) Sensor controlled systems may be activated by wired or wireless mechanisms, including motion sensors, door switches and flow switches.

(d) Verify that sensors controls have standby power of 1 watt or less.

(e) Verify that pump and control placement for the demand recirculation meets one of the following criteria:

1. When a dedicated return line has been installed the pump, controls and thermo-sensor are installed at the end of the supply portion of the recirculation loop (typically under a sink); or
2. The pump and controls is installed on the return line near the water heater and the thermo-sensor is installed in an accessible location as close to the end of the supply portion of the recirculation loop as possible (typically under a sink), or
3. When the cold water line is used as the return, the pump, demand controls and thermosensor shall be installed in an accessible location at the end of supply portion of the hot water distribution line (typically under a sink).

(f) Verify that a check valve is installed in the recirculation loop to prevent unintentional circulation of the water (thermo-siphoning) and back flow when the system is not operating. This check valve may be included with the pump.

(g) The hot water distribution system piping from the water heater(s) to the fixtures and appliances must take the most direct path. For example, in a house with more than 1-story and the water heater in the garage, this requirement would exclude running hot water supply piping from the water heater to the attic, and then running the line back down to a first floor point of use.

(h) The HERS inspector shall also verify that the supply portion of each circulation loop, the first five feet of branches off the loop and the dedicated return line are insulated based on the conductivity range in TABLE 120.3-A, the insulation level shall be selected from the fluid temperature range based on the thickness requirements in TABLE 120.3-A and the insulation shall be installed in accordance with RA3.6.2. Other hot water piping shall meet the requirements of §150.0(j) and be installed in accordance with RA3.6.2. Insulation is not required on the cold water line when it is used as the return.

(i) Verify that sensor controls initiate pump operation by activating one of the sensor controls and observing that the pump turns on and then shuts off in accordance with one of the two methods listed.

1. After the pump has been activated, the controls shall allow the pump to operate until the water temperature at the thermo-sensor rises not more than 10ºF (5.6 ºC) above the initial temperature of the water in the pipe, or
2. The controls shall not allow the pump to operate when the temperature in the pipe exceeds 102ºF (38.9 ºC).

(j) Verify that the controls have a feature that limits pump operation to a maximum of 5 minutes following any activation. This is provided in the event that the normal means of shutting off the pump have failed.

(k) The manufacturer(s) of the recirculation pump and the controls shall provide installation and operation instructions that provide details of the operation of the pump and controls and such instructions shall be available at the jobsite for inspection.

RA3.6.8 HERS-Multiple Recirculation Loop Design for DHW Systems Serving Multiple Dwelling Units

The visual inspection shall verify that a central DHW system serving a building with more than eight dwelling units has at least two recirculation loops, each serving roughly the same number of dwelling. Unique building sections may have additional recirculation loops. These recirculation loops may be connected to the same water heating equipment or be connected to independent water heating equipment. The HERS inspector shall verify that there are at least two recirculation loops each serving roughly the same number of dwelling units. Unique sections of the building may have separate loops. Ideally each loop will have its own pump and controls.

RA3.6.9 HERS-Verified Drain Water Heat Recovery System (DWHR-H)

A HERS inspection is required to obtain this credit. All DWHR unit(s) shall be certified to the Energy Commission according to the following requirements:

(a) Vertical DWHR unit(s) shall be compliant with CSA B55.2, and tested and labeled in accordance with CSA B55.1 or IAPMO IGC 346-2017. Sloped DWHR unit(s) shall be compliant with IAPMO PS 92, and tested and labeled with IAPMO IGC 346-2017.

(b) The DWHR unit(s) shall have a minimum rated effectiveness of 42 percent.

The HERS inspector shall verify that:

(a) The make, model, and CSA B55.1 or IAPMO IGC 346-2017 rated effectiveness of the DWHR unit(s) shall match the compliance documents. The DWHR unit(s) shall also be verified as a model certified to the Energy Commission as qualified for credit as a DWHR unit(s).

(b) The installation configuration (e.g. equal flow, unequal flow to the water heater, or unequal flow to the showers) and the percent of served shower fixtures shall match the compliance documents.

(c) For water heating system serving a single dwelling, the DWHR system shall, at the minimum, recover heat from the master bathroom shower and must at least transfer that heat either back to all the respective showers or the water heater.

(d) For central water heating system serving multiple dwellings, the DWHR system shall, at the minimum, recover heat from half the showers located above the first floor and must at least transfer that heat either back to all the respective showers or the water heater.

(e) The DWHR unit(s) shall be installed within 1 degrees of the rated slope. Sloped DWHR shall have a minimum lengthwise slope of 1 degree. The lateral level tolerance shall be within plus or minus 1 degree.

(f) The installation shall comply with any applicable California Plumbing Code requirements.

RA3.7 Field Verification and Diagnostic Testing of Mechanical Ventilation Systems

RA3.7.1 Purpose and Scope

RA3.7 contains procedures for verification of heat recovery efficiency and fan efficacy, and for measuring the airflow rate for mechanical ventilation systems.

RA3.7 is applicable to mechanical ventilation systems in residential dwelling units.

RA3.7 provides required procedures for installers, HERS raters and others who are required to perform field verification of mechanical ventilation systems for compliance with Part 6.

Table RA3.7-1 – Summary of Verification and Diagnostic procedures

Diagnostic	Description	Procedure
Whole-Building Mechanical Ventilation Airflow	Verification of whole-building ventilation system airflow rate. Continuous Operation	RA3.7.4.1
Whole-Building Mechanical Ventilation Airflow	Verification of whole-building ventilation system airflow rate. Intermittent Operation	RA3.7.4.2
Kitchen Local Mechanical Exhaust	Verification of vented range hood airflow rate or capture efficiency	RA3.7.4.3
Heat Recovery Ventilation (HRV) or Energy Recovery Ventilation (ERV) Rated Performance Verification	Verification of the HRV/ERV fan efficacy (W/cfm) or heat recovery efficiency.	RA3.7.4.4

RA3.7.2 Instrumentation Specifications

The instrumentation for the air distribution diagnostic measurements shall conform to the following specifications:

RA3.7.2.1 Pressure Measurements

All pressure measurements shall be measured with measurement systems (i.e., sensor plus data acquisition system) having an accuracy equal to or better than ± 1% of pressure reading or ± 0.2 Pa (0.0008 inches water) (whichever is greater). All pressure measurements within the duct system shall be made with static pressure probes such as Dwyer A303 or equivalent.

RA3.7.2.2 Airflow Rate Measurements

All measurements of ventilation fan airflow rate shall be made with an airflow rate measurement apparatus (i.e., sensor plus data acquisition system) having an accuracy equal to or better than ± 10% of reading. The apparatus shall have an accuracy specification that is applicable to the airflow rates that must be verified utilizing the procedures in Section RA3.7.4. Airflows shall be measured at the mechanical ventilation fan's inlet terminals/grilles or outlet terminals/grilles.

RA3.7.2.3 Calibration

All instrumentation used for mechanical ventilation system airflow rate diagnostic measurements shall be calibrated according to the manufacturer's calibration procedure to ensure the airflow measurement apparatus conforms to the accuracy requirement specified in Section RA3.7.2.2.

RA3.7.3 Diagnostic Apparatus for Measurement of Ventilation System Airflow

Ventilation system airflow rate shall be measured using one of the apparatuses listed in Section RA3.7.3. The apparatus shall produce airflow rate measurements that conform to the accuracy requirements specified in Section RA3.7.2 for measurements of residential mechanical ventilation system airflow at system inlet or outlet terminals, grilles, or registers for single or multiple branch ventilation duct systems.

The airflow rate measurement apparatus manufacturers shall publish in their product documentation, specifications for how their airflow measurement apparatuses are to be used for accurately measuring residential mechanical ventilation system airflow at system inlet or outlet terminals, grilles or registers of single or multiple branch ventilation systems.

The airflow measurement apparatus manufacturers shall certify to the Energy Commission that use of the apparatus in accordance with the specifications given in the manufacturer's product documentation will produce measurement results that are within the accuracy required by Section RA3.7.2.2.

For the airflow measurement apparatuses that are certified to the Commission as meeting the accuracy required by Section RA3.7.2.2, the following information shall be posted on the Energy Commission website, making the information available to all people involved in the airflow verification compliance process:

(a) The product manufacturers' model numbers for the airflow measurement apparatuses.

(b) The product manufacturers' product documentation that gives the specifications for use of the airflow measurement apparatuses to accurately measure residential mechanical ventilation system airflow at system inlet or outlet terminals, grilles or registers of single or multiple branch ventilation systems.

A manufacturer's certification to the Commission of the accuracy of the airflow measurement apparatus, and submittal to the Commission of the product documentation that specifies the proper use of the airflow measurement apparatus to produce accurate airflow rate measurements shall be prerequisites for allowing the manufacturer's airflow measurement apparatus to be used for conducting the system airflow verification procedures in Section RA3.7 for demonstrating compliance with Part 6.

RA3.7.3.1 Residential Mechanical Exhaust Airflow Measurement Device

A flowmeter designed for measurement of residential exhaust airflows that meets the applicable instrument accuracy specifications in RA3.7.2 may be used to measure the mechanical exhaust ventilation airflow.

RA3.7.3.2 Powered Flow Capture Hood Airflow Measurement Device

A powered and pressure balanced flow capture hood (subsequently referred to as a Powered Flow Hood[3]) that has the capability to balance the flow capture static pressure difference between the room and the flow capture hood enclosure to 0.0 ± 0.2 Pa (0.0008 inches water) and

3 Also known as "active" flow hood, or "fan assisted" flow hood.

meets the applicable instrumentation specifications in Section RA3.7.2 may be used to verify the ventilation airflow rate if the powered flow hood has a flow capture area at least as large as the ventilation system inlet or outlet, terminal, register, or grille in all dimensions. The fan adjustment needed to balance the flow capture static pressure difference between the room and the flow capture hood enclosure to 0.0 ± 0.2 Pa (0.0008 inches water) shall be provided by either an automatic control or a manual control operated in accordance with the apparatus manufacturer's instructions specified in the manufacturer's product documentation.

RA3.7.3.3 Traditional Flow Capture Hood

A traditional flow capture hood[4] meeting the applicable instrumentation specifications in Section RA3.7.2 may be used to verify the ventilation system airflow rate if the non-powered flow hood has a capture area at least as large as the ventilation system inlet or outlet terminal, register or grille in all dimensions.

RA3.7.4 Procedures

This section describes the procedures used to verify Mechanical ventilation system airflow.

RA3.7.4.1 Mechanical Ventilation Airflow Rate Measurement - Continuous Operation

If multiple fans are specified to operate simultaneously to provide the total required ventilation airflow, the measurements shall be made with all applicable fans operating simultaneously.

RA3.7.4.1.1 Supply and Exhaust Ventilation Systems

(a) A flow measuring device that meets the applicable instrumentation requirements given in Section RA3.7.2, and RA3.7.3 shall be used to measure the ventilation airflow(s).

(b) Measure and record the ventilation airflow(s).

(c) If the measured total airflow is greater than or equal to the ventilation airflow rate required by the Standards or the Certificate of Compliance, the mechanical ventilation system complies. Otherwise the mechanical ventilation system does not comply, and corrective action shall be taken.

RA3.7.4.1.2 Balanced Ventilation Systems

(a) A flow measuring device that meets the applicable instrumentation requirements given in Section RA3.7.2, and RA3.7.3 shall be used to measure the ventilation airflows.

(b) Confirm that both the supply side and the exhaust side of the balanced system operate simultaneously in response to a shared system control.

(c) Measure the airflow rate for the exhaust side of the system.

(d) Measure the airflow rate for the supply side of the system.

(e) Calculate the percent difference between the exhaust and supply airflow rates.

4 Also known as “non-powered flow hood, "standard" flow hood, "commercially available" flow hood, or "passive" flow hood.

(f) Calculate the average of the exhaust and the supply airflow rates.

(g) If the exhaust and supply airflow rates are within 20% of each other, and the average of the exhaust and supply airflow rates is greater than or equal to the airflow rate required by the Standards or the Certificate of Compliance, the balanced ventilation system complies. Otherwise, the system does not comply, and corrective action shall be taken.

(h) If the balanced system is an HRV or ERV and compliance with a recovery efficiency or fan efficacy specification is required, then also perform the verification specified in RA3.7.4.4.

RA3.7.4.2 Mechanical Ventilation Airflow Rate Measurement - Intermittent Operation

The Executive Director may approve intermittent mechanical ventilation systems, devices, or controls for use for compliance with field verification and diagnostic testing requirements for mechanical ventilation airflow, subject to a manufacturer providing sufficient evidence to the Executive Director that the installed mechanical ventilation systems, devices, or controls will provide at least the minimum ventilation airflow required by the Standards, and subject to consideration of the manufacturer's proposed field verification and diagnostic test protocol for the ventilation system(s). Ventilation airflow of systems with multiple operating modes shall be tested in all modes designed to comply with the required ventilation airflows.

Approved systems, devices, or controls, and field verification and diagnostic test protocols for intermittent mechanical ventilation systems shall be listed in directories published by the Energy Commission.

RA3.7.4.3 Kitchen Local Mechanical Exhaust - Vented Range Hood Verification

The verification shall utilize certified performance rating data from the Home Ventilating Institute (HVI) Certified Home Ventilating Products Directory at https://hvi.org/proddirectory/index.cfm, the Association of Home Appliance Manufacturers (AHAM) Certified Products Directory at https://www.aham.org/AHAM/What_We_Do/Kitchen_Range_Hood_Certification, or another directory of certified product performance ratings approved by the Energy Commission for determining compliance. The verification procedure shall consist of visual inspection of the installed kitchen range hood to verify and record the following information:

(a) The manufacturer name and model number.

(b) The model is listed in the HVI, AHAM, or other CEC-approved directory.

(c) The rated airflow value or rated capture efficiency value listed in the HVI, AHAM, or other CEC-approved directory.

(d) The sound rating value listed in the HVI, AHAM, or other CEC-approved directory.

(e) If the value for the rated airflow or rated capture efficiency given in the directory is greater than or equal to the airflow or capture efficiency requirements specified in the Standards, and if the value for the sone rating given in the directory is less than or equal to the sone rating requirements specified in Standards, then the kitchen range hood complies. Otherwise the kitchen range hood does not comply. If the kitchen range hood is not listed in the HVI, AHAM, or other CEC-approved directory, then the system does not comply.

RA3.7.4.4 Heat Recovery Ventilation (HRV) or Energy Recovery Ventilation (ERV) Rated Performance Verification

The verification shall utilize certified performance rating data from the Home Ventilating Institute (HVI) Certified Home Ventilating Products Directory at https://hvi.org/proddirectory/index.cfm, or another directory of certified product performance ratings approved by the Energy Commission for determining compliance. The verification procedure shall consist of visual inspection of the installed system to verify and record the following information:

1. Record the manufacturer make and model from the installed system nameplate.
2. Verify the model is listed in the HVI or other CEC-approved directory.
3. If compliance with a fan efficacy performance rating (w/cfm) is required, then determine and record the fan efficacy rating for the installed model using the model details in the energy ratings in the HVI, or other CEC-approved directory in accordance with steps a, b, and c below.
   a. Record the required ventilation airflow (cfm) for the installed HRV/ERV as specified on the certificate of compliance.
   b. From the energy ratings in the HVI or other CEC approved directory, determine, and record the rated Power Consumed (Watts) at 32 degrees Fahrenheit, at the closest Net Airflow (cfm) listed in the directory that is greater than or equal to the ventilation airflow (cfm) required on the certificate of compliance. Alternatively, linear interpolation of the directory ratings at 32 degrees Fahrenheit shall be allowed if the interpolated value is calculated based on a Net Airflow (cfm) that is equal to the ventilation airflow (cfm) required on the certificate of compliance. Interpolation shall be in accordance with equation RA3.7-1. Extrapolation of the directory ratings at 32 degrees Fahrenheit shall not be allowed.

      Equation RA3.7-1 $$pc = pc1 + [(na - na1) / (na2 - na1)] \times (pc2 - pc1)$$

      where:

      na is the known value for Net Airflow equal to the ventilation airflow required on the certificate of compliance,

      pc is the unknown value for Power Consumed (Watts) at 32 degrees Fahrenheit.

      na1 and pc1 are the closest rated values at 32 degrees Fahrenheit for Net Airflow (cfm) and Power Consumed (Watts) respectively that are below the known na value.

      na2 and pc2 are the closest rated values at 32 degrees Fahrenheit for Net Airflow (cfm) and Power Consumed (Watts) respectively that are above the known na value.

   c. Divide the value for Power Consumed (Watts) recorded in step b, by the Net Airflow (cfm) used in step b to determine the Power Consumed.

4. If compliance with a sensible recovery efficiency (SRE) performance rating (%) is required, then determine and record the SRE rating for the installed model using the model details in the energy ratings in the HVI or other CEC-approved directory in accordance with steps a, and b below.

   a. Record the required ventilation airflow (cfm) for the installed HRV/ERV as specified on the certificate of compliance.

   b. From the energy ratings in the HVI or other CEC approved directory, determine, and record the rated SRE (%) at 32 degrees Fahrenheit, at the closest Net Airflow (cfm) listed in the directory that is greater than or equal to the ventilation airflow (cfm) required on the certificate of compliance. Alternatively, linear interpolation of the directory ratings at 32 degrees Fahrenheit shall be allowed if the interpolated value is calculated based on a Net Airflow (cfm) that is equal to the ventilation airflow (cfm) required on the certificate of compliance. Interpolation shall be in accordance with equation RA3.7-2. Extrapolation of the directory ratings at 32 degrees Fahrenheit shall not be allowed.

      Equation RA3.7-2 $$sre = sre1 + [(na - na1) / (na2 - na1)] X (sre2 - sre1)$$

      where:

      na is the known value for Net Airflow equal to the ventilation airflow required on the certificate of compliance,

      sre is the unknown value for SRE at 32 degrees Fahrenheit.

      na1 and sre1 are the closest rated values at 32 degrees Fahrenheit for Net Airflow (cfm) and SRE respectively that are below the known na value.

      na2 and sre2 are the closest rated values at 32 degrees Fahrenheit for Net Airflow (cfm) and SRE respectively that are above the known na value.

5. Determining Compliance.

   a. If the value determined for SRE by one or both of the alternatives in step 4 for the installed system is greater than or equal to the SRE required for compliance, then the system complies with the sensible recovery efficiency rating requirement. Otherwise the system does not comply.

   b. If the value determined for fan efficacy (W/cfm) by one or both of the alternatives in step 3 for the installed system is less than or equal to the fan efficacy required for compliance, then the system complies with the fan efficacy rating requirement. Otherwise, the system does not comply.

   c. If compliance with both fan efficacy and sensible recovery efficiency ratings are required, then both ratings shall comply at the same Net Airflow (cfm), otherwise the system does not comply.

   d. If the system is not listed in the HVI or other CEC-approved directory, then the system does not comply.

RA3.8 Field Verification and Diagnostic Testing of Air Leakage of Building Enclosures and Dwelling Unit Enclosures

RA3.8.1 Purpose and Scope

The purpose of this test procedure is to measure the air leakage rate through a building enclosure or a dwelling unit enclosure.

The measurement procedure shall be based on the specifications of Residential Energy Services Network's (RESNET) Standard for Testing Airtightness of Building, Dwelling Unit, and Sleeping Unit Enclosures; Airtightness of Heating and Cooling Air Distribution Systems; and Airflow of Mechanical Ventilation Systems (ANSI/RESNET/ICC 380-2019) (RESNET 380) as further specified in Subsections RA3.8.2, RA3.8.3, RA3.8.4 below.

This enclosure leakage procedure is applicable to:

- Single family building enclosures
- Multifamily dwelling unit enclosures

RA3.8.2 Instrument Specifications

The instrumentation for the enclosure leakage measurements shall conform to the specifications in RESNET 380 Section 4.1.

RA3.8.3 Enclosure Leakage Measurement Procedures

The enclosure leakage measurement procedure shall conform to the following specifications:

(a) The procedure for preparation of the building or dwelling unit for testing shall conform to the applicable requirements in RESNET 380 Section 4.2.

(b) The procedure for installation of the test apparatus, and preparations for measurement shall conform to the applicable requirements in RESNET 380 Section 4.3.

If compliance requires the results of the test to be reported in cubic feet per minute per ft^2 of dwelling unit enclosure surface area at 50 Pa (0.2 inch water) (CFM50/ft^2 of enclosure), the dwelling unit enclosure interior surface area in ft^2 (compartmentalization boundary area) shall be recorded. Note: the compartmentalization boundary area is the sum of the interior surface areas of the dwelling unit enclosure walls between dwelling units, exterior walls, ceiling, and floor.

(c) The procedure for the conduct of the enclosure leakage test shall conform to the One-Point Airtightness Test specified in RESNET 380 Section 4.4.1.

RA3.8.4 Determination of Test Results

The results of the test shall be determined as follows:

(a) The leakage airflow in CFM50 determined by the One-Point Airtightness Test specified in RESNET 380 Section 4.4.1 shall be adjusted using RESNET 380 Section 4.5.1, equation (5a).

(b) If compliance requires the results of the test to be reported in air changes per hour at 50 Pa (0.2 inch water) (ACH50), the leakage results determined by RESNET 380 Section 4.5.1, equation (5a) shall be converted to ACH50 using RESNET 380 Section 4.5.2, equation (7a).

(c) If compliance requires the results of the test to be reported in CFM50/ft^2 of enclosed the leakage results determined by RESNET 380 Section 4.5.1, equation (5a) shall be converted to CFM50/ft^2 of enclosure using RESNET 380 Section 4.5.2, equation 10.

RA3.8.5 Determining Compliance

If the applicable value(s) for CFM50, ACH50, or CFM50/ft^2 of enclosure determined in Section RA3.8.4 are less than or equal to the enclosure leakage compliance criterion specified by the Standards or the Certificate of Compliance, the enclosure complies. Otherwise the enclosure does not comply.

RA3.9 Field Verification and Diagnostic Testing of Whole House Fans (WHF)

RA3.9.1 Purpose and Scope

RA3.9 contains procedures for:

(a) Measurement of WHF airflow rate to confirm compliance with the airflow rate requirements specified in the performance standards set forth in Standards section 150.1(b).

(b) Measurement of WHF Watt draw.

(c) Calculation of WHF efficacy (w/cfm) utilizing simultaneous measurement of WHF Watt draw and airflow rate.

RA3.9.2 Instrument Specifications

The instrumentation for the diagnostic measurements shall conform to the following specifications:

RA3.9.2.1 Pressure Measurement

All pressure measurements shall be performed with measurement systems (i.e., sensor plus data acquisition system) having an accuracy of ± 1% of pressure reading or ± 0.2 Pa (.0008 inches water) (whichever is greater).

RA3.9.2.2 Airflow Rate Measurements

All measurements of WHF airflow rates shall be made with an airflow rate measurement apparatus (i.e., sensor plus data acquisition system) having an accuracy of ± 7% of reading or ± 5 cfm whichever is greater.

RA3.9.2.3 Fan Watt Draw Measurements

All measurements of WHF watt draws shall be made with true power measurement systems (i.e., sensor plus data acquisition system) having an accuracy of ± 2% of reading or ± 10 watts whichever is greater.

RA3.9.3 WHF Airflow Rate Measurement Apparatus

WHF airflow rate shall be measured using one of the apparatuses listed in Section RA3.9.3. The apparatus shall produce airflow rate measurements that conform to the accuracy requirements specified in Section RA3.9.2 for measurements of residential WHFs.

The airflow rate measurement apparatus manufacturers shall publish in their product documentation, specifications for how their airflow measurement apparatuses are to be used for accurately measuring WHF airflow rates.

The airflow measurement apparatus manufacturers shall certify to the Energy Commission that use of the apparatus in accordance with the specifications given in the manufacturer's product documentation will produce measurement results that are within the accuracy required by Section RA3.9.2.

For the airflow measurement apparatuses that are certified to the Commission as meeting the accuracy required by Section RA3.9.2, the following information will be posted on the Energy Commission website, making the information available to all people involved in the airflow verification compliance process:

(a) The product manufacturers' model numbers for the airflow measurement apparatuses.

(b) The product manufacturers' product documentation that gives the specifications for use of the airflow measurement apparatuses to accurately measure WHF airflow.

A manufacturer's certification to the Commission of the accuracy of the airflow measurement apparatus, and submittal to the Commission of the product documentation that specifies the proper use of the airflow measurement apparatus to produce accurate airflow rate measurements shall be prerequisites for allowing the manufacturer's airflow measurement apparatus to be used for conducting the system airflow verification procedures in Section RA3.9 for demonstrating compliance with Part 6.

RA3.9.3.1 Fan Flowmeter

The apparatus for measuring the system airflow rate shall consist of a building pressurization and airflow measurement device (subsequently referred to as a fan flowmeter) that meets all applicable instrumentation specifications in Section RA3.9.2, and a static pressure measurement device that meets the specifications in Section RA3.9.2.1. The fan flowmeter shall be attached at the inlet to a WHF from the conditioned space. The fan flowmeter shall be attached at a point where all the airflow through the system will flow through it. All WHF dampers shall be in their normal operating condition. The static pressure probe(s) shall be fixed to locations inside and outside the dwelling such that they will not be moved during this test.

RA3.9.3.2 Powered Flow Capture Hood

A powered and pressure balanced flow capture hood (subsequently referred to as a Powered Flow Hood[5]) that has the capability to balance the flow capture static pressure difference between the room and the flow capture hood enclosure to 0.0 ± 0.2 Pa (.0008 inches water) and meets the applicable instrumentation specifications in Section RA3.9.2 may be used to verify the system airflow rate at the WHF inlet if the powered flow hood has a flow capture area at least as large as the WHF inlet in all dimensions. The fan adjustment needed to balance the flow capture static pressure difference between the room and the flow capture hood enclosure to 0.0 ± 0.2 Pa (.0008 inches water) shall be provided by either an automatic control or a manual control operated in accordance with the apparatus manufacturer's instructions specified in the manufacturer's product documentation. All WHF dampers shall be in their normal operating position. Measurement(s) shall be taken at the inlet of the WHF.

RA3.9.3.3 Traditional Flow Capture Hood

A traditional flow capture hood[6] meeting the applicable instrumentation specifications in Section RA3.9.2.2 may be used to verify the system airflow rate at the WHF inlet if the device has a capture area at least as large as the WHF inlet grille in all dimensions. All WHF dampers shall be in their normal operating position. Measurement(s) shall be taken at the inlet of the WHF.

RA3.9.3.4 WHF Watt Draw Measurement Apparatus

The air handler watt draw shall be measured using one of the following apparatuses.

RA3.9.3.5 Portable Watt Meter

The apparatus for measuring the WHF watt draw shall consist of a wattmeter meeting the applicable instrumentation specifications in RA3.3.1. The measuring device shall be attached to measure the WHF watt draw. All WHF dampers shall be in their normal operating condition.

When required to measure fan watt draw on WHF equipment that is wired directly to an electrical junction box, it is recommended to use portable true power clamp-on meters to provide flexibility for isolating the correct fan wires serving the WHF.

RA3.9.3.6 Utility Revenue Meter

The apparatus for measuring the WHF watt draw shall consist of a utility revenue meter meeting the applicable instrumentation specifications in RA3.9.2.3 and a stopwatch that provides measurements in units of seconds. All WHF dampers and access panels shall be in their normal operating condition.

RA3.9.3.7 Digital Utility Revenue Meter

The apparatus for measuring the WHF watt draw shall consist of a digital utility revenue meter meeting the applicable instrumentation specifications in RA3.3.1 that provides direct digital

5 Also known as "active" flow hood, or "fan assisted" flow hood.

6 Also known as "non-powered" flow hood, "standard" flow hood, "commercially available" flow hood, or "passive" flow hood.

display of the watt draw. All WHF dampers and access panels shall be in their normal operating condition.

RA3.9.4 Procedures

RA3.9.4.1 WHF Airflow Rate Measurement Procedures

When required for compliance, the installed WHF airflow shall be diagnostically tested using one of the methods specified in this section.

The measured airflow rate shall be expressed in cubic feet per minute of standard air (standard air has a density of 0.075 lb/ft^3). When the airflow measurement is made at altitudes significantly different from sea level or at temperatures significantly different from 70°F, the airflow indicated on the device gauge may differ from the standard CFM by as much as 15 percent. Corrections from indicated to standard CFM shall be made using the procedure specified by the airflow measurement device manufacturer.

When multiple WHFs are used to comply with the required WHF airflow rate for the dwelling unit, all WHFs in the dwelling unit shall be operated simultaneously and the sum of the airflow rate measurements of the simultaneously operating WHFs for the dwelling shall be determined.

When flow capture hood devices are used, the capture area shall be at least as large as the WHF inlet grille in all dimensions.

WHF airflow shall be measured with the dwelling unit window openings configured such that when the WHF(s) are operating, a dwelling unit pressure of negative 10 Pa ± 5 Pa with reference to (WRT) outside is attained. This is the WHF operating pressure (WHF-OP).

RA3.9.4.1.1 WHF Airflow Rate Measurement Using Attic Pressure Matching and Fan Flowmeter

(a) Open the window(s) that are typically opened during WHF operation.

(b) Place a pressure sensing probe/tube in the attic. If necessary, use a suitable means such as cardboard sheets and tape to facilitate sealing off the access opening between the attic and the dwelling unit's conditioned space to allow the pressure sensing probe/tube to be inserted into the attic space without crimping or restricting the pressure sensing probe/tube. There shall be no leakage of air from the attic through the attic access opening into the dwelling unit during this verification procedure.

(c) Attach the attic pressure sensing tube to a digital pressure gage such that it will measure the pressure difference between the dwelling unit conditioned space and the attic.

(d) Turn on all WHFs required to meet the dwelling unit WHF airflow rate required for compliance. If applicable, adjust multiple WHFs or variable speed WHFs to operate at a total airflow rate greater than or equal to the WHF airflow rate required for compliance.

(e) Adjust the dwelling unit window openings to bring the dwelling unit to the WHF-OP of negative 10 Pa ± 5 Pa WRT outside.

(f) Measure and record the pressure difference (Pa) between the attic and the dwelling unit conditioned space (P_{attic}) while the dwelling unit is at the WHF-OP.

(g) Turn off the WHF.

(h) Do not change the window openings. The same dwelling unit window opening configuration used to establish the WHF-OP used for the measurement in step (f) shall be used for the pressure matching procedure specified below.

(i) Attach the fan flowmeter to the inlet grille of the WHF. The fan flowmeter's capture enclosure or ductwork shall cover the WHF intake grille completely.

(j) Turn on all WHFs that were used during the measurement in step (f). The speed of the WHFs shall be the same as used for the measurement in step (f).

(k) Turn on the fan flowmeter. Adjust the fan flowmeter speed until the pressure difference (Pa) between the attic and the dwelling unit conditioned space matches P_{attic} determined in step (f).

(l) Record the flow through the fan flowmeter. When multiple WHFs are used to meet the required airflow, repeat steps (g) through (l) for each WHF, then sum the airflow measurements for all WHFs to arrive at the total WHF airflow for the dwelling unit.

RA3.9.4.1.2 WHF Airflow Rate Measurement Using Powered Flow Capture Hood

The WHF airflow measurement shall be performed using the following procedures:

(a) Open the window(s) that are typically opened during WHF operation.

(b) Turn on all WHFs required to meet the dwelling unit WHF airflow rate. Adjust multiple or variable speed WHFs to operate at an airflow rate that will be greater than or equal to the rate required for compliance.

(c) Adjust the dwelling unit window openings to bring the dwelling unit to the WHF-OP of negative 10 Pa ± 5 Pa WRT outside.

(d) Measure the airflow rate(s) at the inlet grille(s) in accordance with RA3.9.3.2 with a calibrated powered flow hood to determine the total WHF airflow for the dwelling unit.

No part of the WHF intake shall be blocked or masked off to accommodate an undersized hood.

Operation of the powered flow hood shall conform to the specifications in the manufacturer's product documentation.

RA3.9.4.1.3 WHF Airflow Rate Measurement Using Traditional Flow Capture Hood

The WHF airflow measurement shall be performed using the following procedures.

(a) Open the window(s) that are typically opened during WHF operation.

(b) Turn on all WHFs required to meet the dwelling unit WHF airflow rate. Adjust multiple or variable speed WHFs to operate at an airflow rate that will be greater than or equal to the rate required for compliance.

(c) Adjust the dwelling unit window openings to bring the dwelling unit to the WHF-OP of negative 10 Pa ± 5 Pa WRT outside.

(d) Measure the airflow rate(s) at the inlet grille(s) with a calibrated traditional flow capture hood to determine the total WHF airflow for the dwelling unit.

No part of the WHF intake shall be blocked or masked off to accommodate an undersized hood.

Operation of the flow hood shall conform to the specifications in the manufacturer's product documentation.

RA3.9.4.2 WHF Fan Watt Draw Measurement Procedures

When multiple WHFs are used to comply with the required WHF watt draw for the dwelling unit, all WHFs in the dwelling unit shall be operated simultaneously and the sum of the watt draw measurements of the simultaneously operating WHFs for the dwelling shall be determined.

When required for compliance, the WHF watt draw shall be measured using one of the following methods:

RA3.9.4.2.1 WHF Watt Draw Measurement Using Portable Watt Meter

The WHF watt draw measurement shall be performed using the following procedures.

(a) The WHF(s) shall be operating at the WHF-OP used for the airflow rate measurement procedures specified in Section RA3.9.4.1.

(b) Measure the watt draw(s) to determine the total WHF watt draw for the dwelling unit.

When measuring watt draw of units that are wired directly to an electrical junction box, it is recommended to use portable true power clamp-on meters to provide flexibility for isolating the correct fan wires.

RA3.9.4.2.2 WHF Watt Draw Measurement Using Utility Revenue Meter

The WHF watt draw measurement shall be performed using the following procedures.

(a) Turn off every circuit breaker except the one exclusively serving the WHF(s).

(b) The WHF(s) shall be operating at the WHF-OP used for the airflow rate measurement procedures specified in Section RA3.9.4.1.

(c) Record the Kh factor on the revenue meter, count the number of full revolutions of the meter wheel over a period exceeding 90 seconds.

(d) Record the number of revolutions (Nrev) and time period (trev, seconds).

(e) Using the following equation, compute the WHF watt draw (Wfan).

Equation RA3.9-1 WHF Fan Watt Draw Wfan = (Kh x Nrev x 3600) / trev

(f) Return all circuit breakers to their original positions.

RA3.9.4.2.3 WHF Watt Draw Measurement Using Digital Utility Revenue Meter

The WHF watt draw measurement shall be performed using the following procedures:

(a) Turn off every circuit breaker except the one exclusively serving the WHF(s).

(b) The WHF(s) shall be operating at the WHF-OP used for the airflow rate measurement procedures specified in Section RA3.9.4.1.

(c) Read the Watt draw from the digital utility meter digital display.

(d) Return all circuit breakers to their original positions.

RA3.9.4.3 Determination of WHF Efficacy

Demonstrating compliance with WHF efficacy requirements requires simultaneous measurement of the WHF airflow rate using Section RA3.9.4.1 procedures and fan watt draw using Section RA3.9.4.2 procedures. The results of the simultaneous airflow rate and fan Watt draw measurements are used for calculation of a value for the WHF efficacy as follows:

RA3.9.4.3.1 Fan Efficacy Calculation (watt/cfm)

The measured value for fan watt draw (watt) shall be divided by the measured value for airflow rate (cfm) to determine the fan efficacy (watt/cfm).

RA3.9.4.4 WHF Compliance Criteria

In order for the WHF to comply, the requirements in both subsections (a) and (b) below shall be met.

(a) The measured WHF airflow (cfm) shall meet or exceed the WHF airflow compliance criterion specified on the Certificate of Compliance.

(b) The calculated value for fan efficacy (watt/cfm) shall be less than or equal to the WHF efficacy compliance criterion specified on the Certificate of Compliance.

Residential Appendix RA4

Appendix RA4 – Eligibility Criteria for Energy Efficiency Measures

RA4.1 Purpose and Scope

This appendix contains the eligibility requirements which must be met when any of the following features are installed to achieve compliance with the residential building energy efficiency standards. Building Envelope Measures.

RA4.2 Envelope Measures

RA4.2.1 Radiant Barriers

Radiant barriers shall meet specific eligibility and installation criteria to be modeled by any compliance software and receive energy credit for compliance with the Building Energy Efficiency Standards for low-rise residential buildings.

The emittance of the radiant barrier shall be less than or equal to 0.05 as tested in accordance with ASTM C1371 or ASTM E408.

Installation shall conform to ASTM C1158 (Standard Practice for Installation and Use of Radiant Barrier Systems (RBS) in Building Construction), ASTM C727 (Standard Practice for Installation and Use of Reflective Insulation in Building Constructions), ASTM C1313 (Standard Specification for *Sheet Radiant Barriers for Building Construction Applications*), and ASTM C1224 (*Standard Specification for Reflective Insulation for Building Applications*), and the radiant barrier shall be securely installed in a permanent manner with the shiny side facing down toward the interior of the building (ceiling or attic floor). Moreover, radiant barriers shall be installed at the top chords of the roof truss/rafters in any of the following methods:

(a) Draped over the truss/rafter (the top chords) before the upper roof decking is installed.

(b) Spanning between the truss/rafters (top chords) and secured (stapled) to each side.

(c) Secured (stapled) to the bottom surface of the truss/rafter (top chord). A minimum air space shall be maintained between the top surface of the radiant barrier and roof decking of not less than 1.5 inches at the center of the truss/rafter span.

(d) Attached [laminated] directly to the underside of the roof decking. The radiant barrier shall be laminated and perforated by the manufacturer to allow moisture/vapor transfer through the roof deck.

(e) In addition, the radiant barrier shall be installed to cover all gable end walls and other vertical surfaces in the attic.

RA4.2.1.1 For Prescriptive Compliance: The attic shall be ventilated to:

(a) Provide a minimum free ventilation area of not less than one square foot of vent area for each 300 ft^2 of attic floor area.

(b) Provide no less than 30 percent upper vents.

(c) Ridge vents or gable end vents are recommended to achieve the best performance. The material should be cut to allow for full airflow to the venting.

(d) The product shall meet all requirements for California certified insulation materials [radiant barriers] of the Department of Consumer Affairs, Bureau of Household Goods and Services, as specified by CCR, Title 24, Part 12, Chapter 12-13, Standards for Insulating Material.

(e) The use of a radiant barrier shall be listed in the Special Features and Modeling Assumptions listings of the Certificate of Compliance and described in detail in the Residential ACM Manual Conform to the radiant barrier manufacturer's instructions.

RA4.2.2 Fenestration Including Dynamic Glazing

For each manufactured fenestration products including dynamic glazing a temporary NFRC Label or a temporary Default Label will be attached to each fenestration product. The labels shall remain attached to the fenestration product until the building inspector verifies the efficiencies.

Before installation the installer or responsible party shall fill out the Installation Certificate form for the fenestration including dynamic glazing and verify the efficiencies (e.g. U-factor and SHGC) matches the Certificate of Compliance and the building plans. A copy of the Installation Certificate shall remain at the job site and a copy given to the building owner and the enforcement agency for their records.

RA4.2.2.1 Installer Shall Verify:

(a) Name of the manufacture, brand name, model matches building plans or energy compliance forms;

(b) That each manufactured fenestration product shall be provided with a temporary NFRC Label Certificate or a Default Label to identify the thermal performance (e.g. U-factor, and SHGC) of each fenestration product being installed;

(c) Identify the azimuth orientation in degrees or in cardinal orientation for each of the installed fenestration products and annotated on the Installation Certificate;

(d) If no NFRC Label is included on the fenestration, then verify with the Responsible Person of the building construction or enforcement agency to ensure the fenestration product used actually meets or exceeds the energy specifications;

(e) For dynamic glazing; to ensure reliable proper control operation, the controls shall be installed and verified to meet manufactures operation specifications. A copy of the User Manual shall be provided to the building owner;

(f) The installer completes and signs the Declaration Statement on the Installation Certificate and signed copy of the Installation Certificate(s) shall remain at the job site; and

(g) A copy shall be given to the building owner and the enforcement agency for their records.

RA4.2.2.2 Window Film

These procedures detail the installation protocols necessary for window films. Each window film product to be installed is provided with a temporary NFRC Label on the box to identify the thermal performance efficiencies (e.g. U-factor, Solar Heat Gain Coefficient (SHGC), and Visible Transmittance (VT)). The labels shall be located at the job site for verification by the enforcement agency. In addition, the responsible person or the installer shall fill out the Installation Certificate and shall verify the thermal performance efficiencies of each window film to be installed matches the energy Certificate of Compliance documentation and the building plans orientation schedule. A copy of the Installation Certificates shall be given to the building owner and the enforcement agency for their records along with other window film information.

RA4.2.2.2.1 Window Film Documentation at Occupancy

(a) The IWFA Architectural Visual Inspection Standard Window Film (dated August 21, 2018), a copy can be obtained through www.iwfa.com;

(b) A sample (8” x 10”) of the film installed with a copy of its Performance Specification Sheet attached; and

(c) A 15 or more year Warranty Certificate(s) shall be given to the building owner.

RA4.2.2.3 The Responsible Person or Installer Shall Verify Before Installation;

(a) Name of the manufacture, brand name, model matches building plans or energy compliance forms;

(b) From the building plans or energy compliance documentation identify the azimuth orientation in degrees or in cardinal orientation for each of the window film to be installed to ensure the correct window film type is installed in the appropriate orientation;

(c) Verify the temporary NFRC label on the box for each window film’s U-factor, Solar Heat Gain (SHGC) and Visible Transmittance (VT) matches the energy compliance documentation and building plans;

(d) List the NFRC Certified Product Directory (CPD) identification number provided on the label on the Installation Certificate form;

(e) If no NFRC Label is included on the box or identification of the window film, then verify with the Responsible Person of the building construction or enforcement agency to ensure the window film used actually meets or exceeds the energy specifications;

(f) Installation of window films shall follow the International Window Film Association (IWFA) Architectural Visual Inspection Standards Window Film (dated August 21, 2018); and,

(g) After the installation, the installer completes and signs the Declaration Statement on the Installation Certificate.

RA4.2.2.4 Documentation at Occupancy

The following documentation shall be made available to the building owner at occupancy:

(a) Completed and signed Installation Certificate form(s);

(b) A 10 or more year Warranty Certificate(s) shall be given to the building owner for fenestration products other than window films.

RA4.3 HVAC Measures

RA4.3.1 Evaporatively-Cooled Condensing Units

To ensure reliable energy savings and proper operation and control, the evaporatively-cooled condensing unit shall conform to the requirements in section RA4.3.1.

The HERS verifications and eligibility testing listed in sections RA4.3.1.1 and RA4.3.1.2 shall be completed, certified by the HVAC installer on the Certificate of Installation, and verified by a HERS Rater on the Certificate of Verification.

The builder or installer shall provide a Certificate of Compliance that reports the use of an evaporatively-cooled condensing unit for determining performance standards compliance, that requires HERS verification of the system equipment, duct sealing, and refrigerant charge for compliance as described in Section RA4.3.1.1.

RA4.3.1.1 HERS Verification

The following shall be verified by a HERS rater and reported on a Certificate of Verification for the system:

(a) EER at 95 º F dry bulb and 75 º F wet bulb temperature is listed with ARI (generally called EERa).

(b) EER at 82 º F dry bulb and 65 º F wet bulb temperature is submitted to ARI and published by the manufacturer in accordance with ARI guidelines (generally called EERb).

(c) Presence of TXV is verified, if the ARI certified EERs are based on equipment with TXVs.

(d) Ducts are tested and sealed in all installations of this equipment according to applicable requirements in Section RA3.1.

(e) Proper refrigerant charge or presence of Fault Indicator Display (FID) is verified if compliance credit is taken for this measure when TXVs are not installed.

RA4.3.1.2 Eligibility Testing Eligibility Testing

The installing contractor shall complete the following eligibility testing and document the results on the applicable Certificate of Installation.

(a) Verify that there is water in the water casing.

(b) Switch on the cooling system by setting the thermostat below the room temperature.

(c) Verify that the water pump starts running when the system is turned on.

(d) When the water pump is running, verify that all the condenser coils are wet.

(e) Verify that the high pressure trip for the compressor is set (per manufacturer's specifications) at or below 300 psig for R22 Refrigerant and at or below the saturation pressure corresponding to a temperature of 131^0 F for all other refrigerants.

(f) Turn off the water supply to the water casing, drain the water from the sump, and verify that the water pump and the compressor trip.

(g) Verify that the condenser coils have a corrosion resistant coating and that the water casing is made up of corrosion resistant material.

(h) Verify that the electrolytic protection is installed.

(i) Verify that a blow-down pump is installed for periodic blow-down to remove solids from the water casing.

(j) Verify that the operation of this pump is automatic based on compressor run time or the conductivity of the water in the casing.

(k) Verify that the water casing is sloped downward towards the blow-down pump location to facilitate removal of solids.

(l) Drift eliminators must be installed to reduce the loss of water to less than 0.002% of the recirculated water (as per test method CTI-HBIK Std.140 or other approved procedure).

(m) Condensate water must be routed to the evaporative condenser sump, unless it is not practical i.e. the fan coil and condenser not separated by conditioned space.

(n) Condenser must have a certification from the manufacturer that water consumption is less than .15 gph per ton of capacity.

(o) Water connection is made with tubing no large than ¼ inch diameter.

(p) Overflow from the unit is not connected directly to the sewer drain (son in the event of a water float failure an overflow condition can be more easily detected) or another means of determining an overflows condition is provided.

(q) The system has a backup solenoid water shutoff control or no spill sump.

RA4.3.2 Evaporative Cooling

Qualifying equipment is limited to either indirect-direct or indirect evaporative coolers. Direct evaporative coolers and indirect or indirect-direct evaporative coolers that do not meet the following eligibility criteria shall not be used.

RA4.3.2.1 Eligibility Testing

The installing contractor shall complete the following eligibility testing and document the results on the applicable Certificate of Installation.

(a) Eligible equipment shall be listed under Title 20 Appliance Standards.

(b) The equipment manufacturer shall certify to the Commission that water use does not exceed 7.5 gallons per ton hour based on the Title 20 Appliance Standards testing criteria.

(c) Equipment shall be permanently installed (no window or portable units).

(d) Installation shall provide for automatic relief of supply air from the house with maximum air velocity through the relief dampers not exceeding 800 fpm (at the Title 20 rated airflow). Pressure relief dampers and ductwork shall be distributed to provide adequate airflow through all habitable rooms. For installations with an attic, ceiling dampers shall be installed to relieve air into the attic, and then to outside through attic vents. For installations without an attic, sidewall relief dampers are acceptable.

(e) To minimize water consumption, bleed systems shall not be allowed.

(f) A water quality management system (either "pump out" or conductivity sensor) is required. "Pump out" systems can either be integral to the evaporative cooler or they can be accessories that operate on a timed interval. The time interval between dumps shall be set to a minimum of six hours of cooler operation. Longer intervals are encouraged if local water quality allows.

RA4.4 Water Heating Measures

RA4.4.1 Proper Installation of Pipe Insulation

Unless otherwise stated, insulation must meet the requirements specified in §150.0(j). Pipe insulation shall fit tightly to the pipe and all elbows and tees shall be fully insulated. No piping should be visible due to insulation voids with the exception of the last segment of piping that penetrates walls and delivers hot water to the sink, appliance, etc. All domestic hot water piping shall be insulated as specified in Section 609.11 of the California Plumbing Code.

Pipe insulation may be omitted where hot water distribution piping is buried within attic, crawlspace or wall insulation, as described below: In attics and crawlspaces the insulation shall completely surround the pipe with at least 1 inch of insulation and the pipe shall be completely covered with at least 4 inches of insulation further away from the conditioned space. In walls, the insulation must completely surround the pipe with at least 1 inch of insulation. If burial within the insulation does not meet these specifications, then this exception does not apply, and the section of pipe not meeting the specifications must be insulated as specified in §150.0(j).

RA4.4.2 The Standard Distribution System (STD)

The Standard Distribution System design requires that hot water distribution piping meets the requirements of Proper Installation of Pipe Insulation R4.4.1.

RA4.4.3 Reserved for future use

RA4.4.4 Central Parallel Piping (PP)

This hot water distribution system is comprised of one or more manifolds located relatively close to the water heater and pipes running from the manifold to individual fixtures and appliances. The manifolds may have valves for each pipe running from the manifold to individual fixtures and appliances. These valves must be readily accessible in accordance with the plumbing code. The measured length of pipe from the water heater each central manifold shall not exceed 15 feet (measured to the nearest half foot).

The hot water distribution system piping from the manifold to the fixtures and appliances must take the most direct path. For example, in a house with more than 1-story and the water heater in the garage, this requirement would exclude running hot water supply piping from the manifold to the attic, and then running the line back down to a first floor point of use.

The hot water distribution piping must be separated by at least two inches from any other hot water supply piping, and at least six inches from any cold water supply piping or the hot water supply piping must be insulated based on the conductivity range in TABLE 120.3-A and the insulation level shall be selected from the fluid temperature range based on the thickness requirements in TABLE 120.3-A.

Other hot water piping shall be insulated to a level that meets the requirements of §150.0(j) and be installed in accordance with Proper Installation of Pipe Insulation R4.4.1.

RA4.4.5 Point of Use (POU)

This measure requires that all hot water fixtures in the dwelling unit, with the exception of a stand-alone tub must use no more pipe per run than defined in Table 4.4.5. To meet this requirement most houses will require multiple water heaters.

Table 4.4.5

Size Nominal (Inch)	Length of Pipe (feet)
3/8”	15
1/2”	10
3/4”	5

(a) Measurements shall be made to the nearest half foot.

(b) If a combination of piping is used in a single run then one half the allowed length of each size is the maximum installed length.

(c) The hot water distribution system piping from the water heater(s) to the fixtures and appliances must take the most direct path. For example, in a house with more than 1-story and the water heater in the garage, this requirement would exclude running hot

water supply piping from the manifold to the attic, and then running the line back down to a first floor point of use.

(d) Hot water piping shall be insulated to a level that meets the requirements of §150.0(j) and be installed in accordance with Proper Installation of Pipe Insulation R4.4.1.

RA4.4.6 Compact Hot Water Distribution System (CHWDS)

To receive the Compact Hot Water Distribution System credit (available for single family homes and multifamily dwellings served by individual water heaters), plan calculations must be completed that demonstrate that the water heater to fixture proximity is more compact than a threshold criteria that is defined based on the dwelling unit conditioned floor area and number of stories. Compactness is characterized by calculating the "Weighted Distance" from the water heater to key fixtures and the threshold criteria is identified by the "Qualification Distance". (The Qualification Distance is calculated directly by the ACM.) Determination of the Weighted Distance for a particular floor plan is dependent on whether it is a non-recirculating or a recirculating distribution system, with the recirculation option only available for single family homes.

Calculation of the Weighted Distance varies depending on the type of system being installed. The calculation is based on a equation with modifications based on the distribution system type. In each case the basis of the calculation is the plan-view, straight line distance from the water heater to the center of the further use point fixture in three locations of the dwelling unit, two of which are the master bathroom and the kitchen. It is calculated using the following equation:

Weighted_Distance = x * d_MasterBath + y * d_Kitchen + z * d_FurthestThird

Where:

x, y, and z = Weighted Distance coefficients (unitless), see Table 4.4.6-1.

d_MasterBath = The plan view, straight line distance from the water heater to the furthest fixture served by that water heater in the master bathroom (feet).

d_Kitchen = The plan view, straight line distance from the water heater to the furthest fixture served by that water heater in the kitchen (feet).

d_FurthestThird = The plan view, straight line distance from the water heater to the furthest fixture served by that water heater in the furthest room[7] in the dwelling unit (feet).

[7] Because the Master Bath and Kitchen have unique separate terms, the d_FurthestThird fixture must located in neither of these rooms. The laundry room is excluded, and shall not be used as the furthest third fixture. In multifamily cases where there is not another qualifying use point, the d_FurthestThird term equals zero.

Table 4.4.6-1: Weighted Distance Coefficients

Distribution System	x	y	z
Non-Recirculating	0.4	0.4	0.2
Recirculating	0.0	0.0	1.0

Note that the calculations are only based on horizontal plan view distance measurements from the center of the water heater to the center of the use point in the designated location[8]. Vertical pipe run lengths (for example, the vertical distance from the first to second floor) is neglected in the calculations. Use points that are located on floors different than the water heater would have their location translated to the floor where the water heater is located.

In single family homes with multiple water heaters, the Weighted Distance "z term" calculation is performed for each water heater to arrive at a FurthestThird term averaged over each of the "n" water heaters installed. For a non-recirculating distribution system, the resulting Weighted Distance calculation would include the Master Bath, the Kitchen and an average of the FurthestThird term for each of the installed water heaters. (For recirculating systems, similarly the FurthestThird term would represent an average across the "n" water heaters.)

The Qualification Distance is a function of conditioned floor area (CFA), number of stories, and number of installed water heaters. The Qualification Distance for systems with multiple water heaters is identified by using the equation for the appropriate distribution system (recirculation or non-recirculation), and dividing by the number of water heaters installed as shown in the Equation below:

$$\textbf{Qualification Distance} = (a + b * CFA) / n$$

Where:

a, b = Qualification distance coefficients (unitless), see Table 4.4.6-2,

CFA = Conditioned floor area of the dwelling unit (ft^2), and

n = Number of water heaters in the dwelling unit (unitless).

Table 4.4.6-2: Coefficients for the Qualification Distance Calculation

	Coefficient a		Coefficient b	
Building Type	**Non-Recirculating**	**Recirculating**	**Non-Recirculating**	**Recirculating**
Single Family				
One story	10	22.7	0.0095	0.0099
Two story	15	11.5	0.0045	0.0095
Three story	10	0.5	0.0030	0.014
Multifamily				

[8] For example, a shower/tub combination would take the measurement from the fixture supply outlet of the shower/tub, while a two sink lavatory in the master bath would take the measurement from the fixture supply outlet of the lavatory furthest from the water heater.

One story	7.5	n/a	0.0080	n/a
Two or more story	7.5	n/a	0.0050	n/a

RA4.4.7 Recirculation Systems

RA4.4.7.1 Installation requirements for all recirculation systems

The supply portion of each circulation loop, the first five feet of branches off the loop and the dedicated return line are insulated based on the conductivity range in TABLE 120.3-A and the insulation level shall be selected from the fluid temperature range based on the thickness requirements in TABLE 120.3-A and the insulation shall be installed in accordance with Proper Installation of Pipe Insulation. Other hot water piping shall meet the requirements of §150.0(j) and be installed in accordance with Proper Installation of Pipe Insulation R4.4.1.

A check valve shall be installed in the recirculation loop to prevent unintentional circulation of the water (thermo-siphoning) and back flow when the system is not operating. This check valve may be included with the pump.

The hot water distribution system piping from the water heater(s) to the fixtures and appliances must take the most direct path. For example, in a house with more than 1-story and the water heater in the garage, this requirement would exclude running hot water supply piping from the water heater to the attic, and then running the line back down to a first floor point of use.

The recirculation pump can be located external to the water heater or be integral to the water heater.

The manufacturer(s) of the recirculation pump and the controls shall provide installation and operation instructions that provide details of the operation of the pump and controls and such instructions shall be available at the jobsite for inspection.

RA4.4.8 Recirculation with non-demand controls (R-ND)

All recirculation controls with the exception of demand recirculation control systems fall under this category.

(a) More than one circulation loop may be installed. Each loop shall have its own pump and controls.

(b) The active control shall be either: timer, temperature, or time and temperature. Timers shall be set to less than 24 hours. The temperature sensor shall be connected to the piping and to the controls for the pump.

RA4.4.9 Demand Recirculation; Manual Control (R-DRmc)

Demand controlled recirculation systems shall operate “on-demand”, meaning that pump operation shall be initiated shortly prior to the hot water draw. The controls shall operate on the principal of shutting off the pump with a sensed rise in pipe temperature (Delta-T). For this measure a manual switch is used to activate the pump.

(a) More than one circulation loop may be installed. Each loop shall have its own pump and controls.

(b) Manual controls shall be located in the kitchen, bathrooms, and any hot water fixture location that is at least 20 feet (measured along the hot water piping) from the water heater.

(c) Manual controlled systems may be activated by wired or wireless mechanisms, Manual controls shall have standby power of 1 watt or less.

(d) Pump and demand control placement meets one of the following criteria.

1. When a dedicated return line has been installed the pump, demand controls and thermo-sensor are installed at the end of the supply portion of the recirculation loop (typically under a sink); or

2. The pump and demand controls are installed on the return line near the water heater and the thermo-sensor is installed in an accessible location as close to the end of the supply portion of the recirculation loop as possible (typically under a sink), or

3. When the cold water line is used as the return, the pump, demand controls and thermo-sensor is installed in an accessible location at the end of supply portion of the hot water distribution line (typically under a sink).

(e) Insulation is not required on the cold water line when it is used as the return.

(f) Demand controls shall be able to shut off the pump in accordance with one of the following two methods:

1. After the pump has been activated, the controls shall allow the pump to operate until the water temperature at the thermo-sensor rises not more than 10ºF (5.6 ºC) above the initial temperature of the water in the pipe, or

2. The controls shall not allow the pump to operate when the temperature in the pipe exceeds 102ºF (38.9 ºC).

(g) The controls shall limit pump operation to a maximum of 5 minutes following any activation. This is provided in the event that the normal means of shutting off the pump have failed.

RA4.4.10 Demand Recirculation; Sensor Control (RDRsc)

Demand controlled recirculation systems shall operate “on-demand”, meaning that pump operation shall be initiated shortly prior to the hot water draw. The controls shall operate on the principal of shutting off the pump with a sensed rise in pipe temperature (Delta-T). For this measure a sensor control is used to activate the pump rather than a manual control.

(a) More than one circulation loop may be installed. Each loop shall have its own pump and controls.

(b) Sensor controls shall be located in the kitchen, bathrooms, and any hot water fixture location that is at least 20 feet (measured along the hot water piping) from the water heater.

(c) Sensor controlled systems may be activated by wired or wireless mechanisms, including motion sensors, door switches and flow switches. Sensors controls shall have standby power of 1 watt or less.

(d) Pump and demand control placement meets one of the following criteria.

1. When a dedicated return line has been installed the pump, demand controls and thermo-sensor are installed at the end of the supply portion of the recirculation loop (typically under a sink); or
2. The pump and demand controls are installed on the return line near the water heater and the thermo-sensor is installed in an accessible location as close to the end of the supply portion of the recirculation loop as possible (typically under a sink), or
3. When the cold water line is used as the return, the pump, demand controls and thermo-sensor is installed in an accessible location at the end of supply portion of the hot water distribution line (typically under a sink).

(e) Insulation is not required on the cold water line when it is used as the return.

(f) Demand controls shall be able to shut off the pump in accordance with one of the following two methods:

1. After the pump has been activated, the controls shall allow the pump to operate until the water temperature at the thermo-sensor rises not more than 10ºF (5.6 ºC) above the initial temperature of the water in the pipe, or
2. The controls shall not allow the pump to operate when the temperature in the pipe exceeds 102ºF (38.9 ºC).

(g) The controls shall limit pump operation to a maximum of 5 minutes following any activation. This is provided in the event that the normal means of shutting off the pump have failed.

RA4.4.11 Multiple Dwelling Units: Recirculation Temperature Modulation Control

A recirculation temperature modulation control shall reduce the hot water supply temperature when hot water demand is determined to be low by the control system. The control system may use a fixed control schedule or dynamic control schedules based measurements of hot water demand. The daily hot water supply temperature reduction, which is defined as the sum of temperature reduction by the control in each hour within a 24-hour period, shall be more than 50 degrees Fahrenheit to qualify for the energy savings credit.

Recirculation systems shall also meet the requirements of §110.3.

RA4.4.12 Multiple Dwelling Units: Recirculation Continuous Monitoring Systems

Systems that qualify as a recirculation continuous monitoring systems for domestic hot water systems serving multiple dwelling units shall record no less frequently than hourly measurements of key system operation parameters, including hot water supply temperatures, hot water return temperatures, and status of gas valve relays of water heating equipment. The continuous monitoring system shall automatically alert building operators of abnormalities identified from monitoring results.

Recirculation systems shall also meet the requirements of §110.3.

RA4.4.13 Multiple Dwelling Units: Demand Recirculation

Demand controlled recirculation systems shall operate "on-demand", meaning that pump operation shall be initiated shortly prior to, or by a hot water draw. The controls shall operate on the principal of shutting off the pump with a sensed rise in pipe temperature (Delta-T). For this measure sensor or manual controls may be used to activate the pump(s).

(a) Manual or sensor controls shall be installed and if powered, have standby power of 1 watt or less. Controls may be located in individual units or on the loop. Controls may be activated by wired or wireless mechanisms, including buttons, motion sensors, door switches and flow switches.

(b) Pump and control placement shall meet one of the following criteria:

1. When a dedicated return line has been installed the pump, controls and thermo-sensor are installed at the end of the supply portion of the recirculation loop; or

2. The pump and controls are installed on the dedicated return line near the water heater and the thermo-sensor is installed in an accessible location as close to the end of the supply portion of the recirculation loop as possible, or

3. When the cold water line is used as the return, the pump, demand controls and thermosensor shall be installed in an accessible location at the end of supply portion of the hot water distribution line (typically under a sink).

(c) Insulation is not required on the cold water line when it is used as the return.

(d) Demand controls shall be able to shut off the pump in accordance with these three methods:

1. After the pump has been activated, the controls shall allow the pump to operate until the water temperature at the thermo-sensor rises not more than 10ºF (5.6 ºC) above the initial temperature of the water in the pipe, or
2. The controls shall not allow the pump to operate when the temperature in the pipe exceeds 102ºF (38.9 ºC).
3. The controls shall limit pump operation to a maximum of 10 minutes following any activation. This is provided in the event that the normal means of shutting off the pump have failed.

Recirculation systems shall also meet the requirements of §110.3.

RA4.4.14 HERS-Verified Pipe Insulation Credit (PIC-H)

Consistent with the requirements of RA4.4.1, this measure requires a HERS inspection to verify that all hot water piping is insulated correctly.

RA4.4.15 HERS-Verified Parallel Piping (PP-H)

Consistent with the requirements of RA4.4.4 this measure requires a HERS inspection to verify that the length of pipe between the water heater and each central manifold does not exceed 5 feet and to verify pipe insulation.

RA4.4.16 HERS-Verified Compact Hot Water Distribution System Expanded Credit (CHWDS-H-EX)

A HERS inspection is required in order to obtain this credit. To meet the Compact Hot Water Distribution System Expanded Credit eligibility requirements, the requirements in RA4.4.6 must be met. In addition, the following HERS field verifications are required:

(a) No hot water piping >1” diameter piping is allowed,

(b) Length of 1” diameter piping is limited to 8 ft or less,

(c) Two and three story buildings cannot have hot water distribution piping in the attic, unless the water heater is also located in the attic and,

(d) Eligible recirculating systems must be HERS-Verified Demand Recirculation: Manual Control conforming to RA4.4.17.

RA4.4.17 HERS-Verified Demand Recirculation: Manual Control (RDRmc-H)

This measure shall include~~s~~ a visual HERS inspection to verify that the demand pump, manual controls and thermo-sensor are present and operating properly.

RA4.4.18 HERS-Verified Demand Recirculation: Sensor Control (RDRsc-H)

This measure shall include~~s~~ a visual HERS inspection to verify that the demand pump, sensor controls and thermo-sensor are present and operating properly.

RA4.4.19 HERS-Verified Multiple Recirculation Loops for DHW Systems Serving Multiple Dwelling Units

Central DHW systems serving a building with more than eight dwelling units shall have at least two recirculation loops, each serving roughly the same number of dwelling units. Unique building sections may have additional recirculation loops. These recirculation loops may be connected to the same water heating equipment or be connected to independent water heating equipment. This credit may be taken in combination with recirculation system.

RA4.4.20 Solar Water Heating Systems

Solar water-heating systems and/or collectors shall be certified and rated by the Solar Rating and Certification Corporation (SRCC), the International Association of Plumbing and Mechanical Officials, Research and Testing (IAPMO R&T), or by a listing agency that is approved by the Executive Director.

To use collectors with the SRCC OG-100 certification and rating, the installed system shall meet the following eligibility criteria:

(a) Include all of the features modeled and generated in the Commission approved solar savings fraction calculation.

(b) The collectors shall be installed according to manufacturer's instructions.

(c) The collectors shall be located in a position that is not shaded by adjacent buildings or trees between 9:00 AM and 3:00 PM (solar time) on December 21.

To use a solar water-heating system with the SRCC OG-300 certification and rating, the installed system shall meet the following eligibility criteria:

(a) The collectors shall face within 35 degrees of south and be tilted at a slope of at least 3:12.

(b) The system shall be installed in the exact configuration for which it was rated. The system shall have the same collectors, pumps, controls, storage tank and backup water heater fuel type as the rated condition.

(c) The system shall be installed according to manufacturer's instructions.

(d) The collectors shall be located in a position that is not shaded by adjacent buildings or trees between 9:00 AM and 3:00 PM (solar time) on December 21.

RA4.4.21 HERS-Verified Drain Water Heat Recovery System (DWHR-H)

A HERS inspection is required to obtain this credit. All DWHR unit(s) shall be certified to the Energy Commission according to the following requirements:

(a) Vertical DWHR unit(s) shall be compliant with CSA B55.2, and tested and labeled in accordance with CSA B55.1 or IAPMO IGC 346-2017. Sloped DWHR unit(s) shall be compliant with IAPMO PS 92, and tested and labeled with IAPMO IGC 346-2017.

(b) The DWHR unit(s) shall have a minimum rated effectiveness of 42 percent.

The HERS inspector shall verify that:

(a) The make, model, and CSA B55.1 or IAPMO IGC 346-2017 rated effectiveness of the DWHR unit(s) shall match the compliance documents. The DWHR unit(s) shall also be verified as a model certified to the Energy Commission as qualified for credit as a DWHR unit(s).

(b) The installation configuration (e.g. equal flow, unequal flow to the water heater, or unequal flow to the showers) and the percent of served shower fixtures shall match the compliance documents.

(c) For water heating system serving a single dwelling, the DWHR system shall, at the minimum, recover heat from the master bathroom shower and must at least transfer that heat either back to all the respective showers or the water heater.

(d) For central water heating system serving multiple dwellings, the DWHR system shall, at the minimum, recover heat from half the showers located above the first floor and must at least transfer that heat either back to all the respective showers or the water heater.

(e) The DWHR unit(s) shall be installed within 1 degrees of the rated slope. Sloped DWHR shall have a minimum lengthwise slope of 1 degree. The lateral level tolerance shall be within plus or minus 1 degree.

(f) The installation shall comply with any applicable California Plumbing Code requirements.

RA4.5 Other Measures

RA4.5.1 Controlled Ventilation Crawlspace (CVC)

Drainage. Proper enforcement of site engineering and drainage, and emphasis on the importance of proper landscaping techniques in maintaining adequate site drainage, is critical.

Ground Water And Soils. Local ground water tables at maximum winter recharge elevation should be below the lowest excavated site foundation elevations. Sites that are well drained and that do not have surface water problems are generally good candidates for this stem-wall insulation strategy. However, the eligibility of this alternative insulating technique is entirely at the enforcement agency officials' discretion. Where disagreements exist, it is incumbent upon the applicant to provide sufficient proof that site drainage strategies (e.g., perimeter drainage techniques) will prevent potential problems.

Ventilation. All crawl space vents must have automatic vent dampers to receive this credit. Automatic vent dampers must be shown on the building plans and installed. The dampers should be temperature actuated to be fully closed at approximately 40°F and fully open at approximately 70°F. Cross ventilation consisting of the required vent area reasonably distributed between opposing foundation walls is required.

Foam Plastic Insulating Materials. Foam plastic insulating materials must be shown on the plans and installed when complying with the following requirements:

Fire Safety—CBC Section 719. Products shall be protected as specified. Certain products have been approved for exposed use in under floor areas by testing and/or listing.

Direct Earth Contact—Foam plastic insulation used for crawl-space insulation having direct earth contact shall be a closed cell water resistant material and meet the slab-edge insulation requirements for water absorption and water vapor transmission rate specified in the mandatory measures.

Vapor Retarder: A Class I or Class II vapor retarder shall be placed over the earth floor of the crawl space to reduce moisture entry and protect insulation from condensation, as specified in the exception to Section 150.0(d).

RA4.5.2 Sunspace

The installation of a sunspace can be a very beneficial energy features in many parts of California. However, if orientation fenestration area or fenestration performance values are installed that to not match compliance documentation then the performance of a sunroom can have significant negative energy impacts. Another critical components of sunroom is ventilation. Sunrooms must have the ability to vent to the outside and to provide airflow to the rest of the house. If any of these components are not present in the actual installation the performance documentation should be reviewed carefully.

RA4.5.3 Multiple Orientations Compliance

When all orientations are used to document compliance as allowed under Section 150.1(c)4 EXCEPTION, the following guidelines shall be meet. Compliance for multifamily or subdivisions that is based upon multiple orientation the annual energy consumption for each specific design (including the reverse images of that design) must be calculated in each of the four cardinal orientations: true north, true east, true south and true west. With this option, a dwelling unit plan must be modeled using the identical combination of energy features and levels in each orientation, and must comply with the energy budget in each case. All of the orientation must either use the reversed plan or the original/standard to demonstrate compliance.

If the dwelling unit have unique designs or energy features the dwelling unit plan must be modeled using the worst-case condition for the energy features that the plan may contain (e.g. highest glazing percentage, least overhangs, largest wall surface area, and with exterior walls instead of party walls if applicable). See Reference Residential Appendix RA 2.6.1 for information that describes how to determine when a dwelling is considered to be a unique model. Each unique dwelling plan must also be modeled separately for each unique floor level. The option of modeling each individual dwelling unit, with its unique characteristics separately according to its actual orientation is always an acceptable alternative.

(This page intentionally left blank.)

Nonresidential Appendix NA1

Appendix NA1 – Nonresidential HERS Verification, Testing, and Documentation Procedures

NA1.1 California Home Energy Rating Systems

Appendix NA1 provides direction for communication and documentation processes that must be completed for compliance with the HERS verification requirements for multifamily dwelling units (dwelling units), and for HERS verification of duct sealing of HVAC systems covered by §120.4(g), §141.0(b)2Dii, and §141.0(b)2E (systems) that require field verification and diagnostic testing by a certified Home Energy Rating System (HERS) Rater, using the testing procedures in Reference Nonresidential Appendix NA2. The Commission approves HERS Providers, subject to the Commission's HERS Program regulations, which appear in the California Code of Regulations, Title 20, Chapter 4, Article 8, Sections 1670-1675. Approved HERS Providers are authorized to certify HERS Raters and maintain quality control over field verification and diagnostic testing.

When the Certificate of Compliance indicates that field verification and diagnostic testing of specific energy efficiency measures are required as a condition for compliance with Title 24, Part 6, an approved HERS Provider and certified HERS Rater shall be used to conduct the field verification and diagnostic testing according to the applicable procedures in Reference Nonresidential Appendix NA2. HERS Providers and HERS Raters shall be considered special inspectors by enforcement agencies and shall demonstrate competence to the satisfaction of the enforcement agency, for field verifications and diagnostic testing. As specified by California Code of Regulations, Title 20, Division 2, Chapter 4, Article 8, Section 1673(j)(2), HERS Providers and HERS Raters shall be independent entities from the builder or subcontractor installer of the energy efficiency improvements being field verified or diagnostically tested. An "Independent Entity means having no financial interest in, and not advocating or recommending the use of any product or service as a means of gaining increased business with, firms or persons specified in CCR Title 20, Division 2, Chapter 4, Article 8, Sections 1671 and 1673(j)". Third Party Quality Control Programs approved by the Commission may serve some of the functions of HERS Raters for field verification and diagnostic testing purposes as specified in NA1.7. Also, Acceptance Test Technicians may serve the function of a HERS Rater for field verification and diagnostic testing purposes as specified in NA1.9.

The remainder of Reference Nonresidential Appendix NA1 describes the:

(a) Requirements for documentation and communication for HERS verification compliance processes;

(b) Responsibilities assigned to each of the parties involved in the field verification and diagnostic testing process;

(c) Requirements for procedures for installing contractors and Certificate of Installation documentation;

(d) Requirements for HERS Rater field verification and diagnostic testing and documentation procedures;

(e) Requirements for sampling procedures for HERS verification compliance;

(f) Requirements for Third Party Quality Control Programs;

(g) Requirements for HERS verification compliance for alterations to existing buildings.

Table NA1-1 describes the measures that require installer certification and HERS Rater field verification and diagnostic testing and identifies the protocol or test procedure in the Reference Nonresidential Appendices that shall be used for completing installer and HERS Rater field verification and diagnostic testing.

Table NA1-1 – Summary of Measures Requiring Field Verification and Diagnostic Testing

Measure Title	Description	Procedure(s)
	Duct Measures	
Duct Sealing	Component Packages require that space conditioning ducts be sealed. If sealed and tested ducts are claimed for compliance, field verification and diagnostic testing is required to verify that approved duct system materials are utilized, and that duct leakage meets the specified criteria.	NA2.1.4.2
	Mechanical Ventilation Measures	
Dwelling-Unit Mechanical Ventilation Airflow – Continuous Operation	Verify that whole-building ventilation system complies with the airflow rate required by ASHRAE Standard 62.2.	NA2.2.4.1
Dwelling-Unit Mechanical Ventilation Airflow – Intermittent Operation	Verify that whole-building ventilation system complies with the airflow rate required by ASHRAE Standard 62.2.	NA2.2.4.2
Kitchen Local Mechanical Exhaust Verification	Verify using certified performance rating data from the HVI Directory or the AHAM Directory for determining that the kitchen exhaust system complies with listed requirements.	NA2.2.4.1.4
Heat Recovery Ventilation (HRV) or Energy Recovery Ventilation (ERV) Rated Performance Verification	Verify that HRV or ERV system meets or exceeds the performance required for compliance.	NA2.2.4.1.5
	Building Envelope Measure	
Building Envelope Air Leakage	The purpose of this test procedure is to measure the air leakage rate through a multifamily dwelling unit enclosures measured in cubic feet per minute	NA2.3

NA1.2 Documentation and Communication Requirements for HERS Verification Compliance

The required building energy compliance features and the required field verification and diagnostic testing procedures shall be identified on a Certificate of Compliance completed in accordance with the requirements in Standards Sections 10-103(a)1 and 10-103(a)2. The builder or subcontractor shall complete all applicable Certificate of Installation documentation in accordance with the requirements in Standards Section 10-103(a)3 and the procedures described in NA1, and shall

provide certification that the construction or installation complies with the applicable requirements on the Certificate of Compliance and all applicable field verification and eligibility criteria. The person responsible for the acceptance testing shall perform the required field verification and diagnostic testing and report the results on the Certificate of Acceptance documentation submitted in accordance with the requirements in Standards Section 10-103(a)4 and the procedures described in NA1, and shall provide certification that the construction or installation information reported on the Certificates of Installation are consistent with applicable requirements on the Certificate of Compliance. A certified HERS Rater shall perform all applicable HERS field verification and diagnostic testing and report the results on the applicable Certificate of Verification documentation submitted in accordance with the requirements of Standards Section 10-103(a)5 and the procedures in NA1.

NA1.2.1 Compliance Document Registration and Verification

Document registration requirements are introduced in Section NA1.2.1.1 and further described in the procedures in subsequent sections of NA1. Verification of electronic documentation is introduced in Section NA1.2.1.2 and is applicable to many aspects of the documentation procedures described in subsequent sections of Nonresidential Appendix NA1.

NA1.2.1.1 Document Registration Terminology and Effective Dates for Registration Requirements

When submittal of documentation to a Data Registry is required by applicable sections of Standards Section 10-103(a), the completed documents are referred to as registered documents, and the process of completing these documents by submitting information and certification signatures to the Data Registry is called registration. Refer to Reference Joint Appendix JA1 for additional terminology for Data Registries, registered documents and registration Providers. Additional specification for the document registration process is given in Reference Joint Appendix JA7.

Data Registry is a web service with a user interface and database maintained by a Registration Provider that complies with the applicable requirements in Reference Joint Appendix JA7, with guidance from the Data Registry Requirements Manual, and provides for registration of residential or nonresidential compliance documentation used for demonstrating compliance with Part 6.

Residential Data Registry is a Data Registry that is maintained by a HERS Provider that provides for registration, when required by Part 6, of all residential compliance documentation and the nonresidential Certificate of Verification.

Nonresidential Data Registry is a Data Registry that is maintained by a Registration Provider approved by the Commission that provides for registration, when required by Part 6, of all nonresidential compliance documentation. However, nonresidential Data Registries may not provide for registration of nonresidential Certificates of Verification.

Registration Provider is an organization that administers a Data Registry service that conforms to the requirements in Reference Joint Appendix JA7 and may conform to the guidance given in the Data Registry Requirements Manual.

NA1.2.1.1.1 Document Registration requirements

Contingent upon the approval of Nonresidential Data Registry(s) by the Commission, for all nonresidential buildings, high-rise residential buildings, and hotels and motels, when designated to allow use of an occupancy group or type regulated by Part 6:

(a) All Certificate of Compliance, Certificate of Installation, and Certificate of Acceptance documentation and Compliance Registration Package shall be submitted for registration and retention to an approved Nonresidential Data Registry. When submittal of documentation to a Data Registry is required, the completed documents are referred to as registered documents, and the process of completing these documents by submitting information and certification signatures to the Data Registry is called registration.

(b) All Certificate of Verification documents for applicable HERS measures are required to be submitted for registration and retention to an approved Residential Data Registry.

All submittals to the Data Registries shall be made electronically in accordance with the specifications in Reference Joint Appendix JA7.

NA1.2.1.2 Verification of Registered Documents

When document registration is required, printed paper copies or electronic copies of the applicable completed, signed, registered compliance documentation shall be allowed for use for required submittals to enforcement agencies, subject to verification that the information shown on the submitted document(s) conforms to the information shown on the current revision of the registered document(s) on file in the Data Registry for the building.

The document registration Provider shall make document verification services available via phone, internet, or utilization of digital technologies, to enable enforcement agency officials, builders, installation contractors, HERS Raters, and other authorized users of the Data Registry to verify that the information shown on submitted documentation is consistent with the information shown on the current revision of the registered document on file in the Data Registry for the applicable building.

NA1.2.2 Summary of Documentation and Communication Procedures

The documentation and communication process for measures that require field verification and diagnostic testing is summarized below. The subsequent sections of this chapter contain additional information and requirements that apply to all situations; however the section on alterations, NA1.8, applies specifically to the differences in the requirements for alterations. NA1.7 applies specifically to the differences in the requirements for Third Party Quality Control Programs.

(a) The documentation author and the principal mechanical designer shall complete the compliance documents for the building.

(b) The documentation author or the principal mechanical designer shall provide a signed Certificate of Compliance to the builder that indicates duct sealing with HERS Rater diagnostic testing and field verification is required for compliance.

(c) The builder or principal mechanical designer shall make arrangements for transmittal of a signed copy of the Certificate of Compliance, for units that require HERS verification, to a

HERS Provider. The builder shall also arrange for the services of a certified HERS Rater prior to installation of the duct system, so that once the installation is complete the HERS Rater has ample time to complete the field verification and diagnostic testing without delaying final approval of occupancy by the enforcement agency. The builder or principal mechanical designer shall make available to the HERS Rater a copy of the Certificate of Compliance that was approved/signed by the principal designer/owner and submitted to the enforcement agency.

(d) The builder or subcontractor shall install the duct system(s) that requires field verification and diagnostic testing. The builder or the installing subcontractor shall perform diagnostic testing according to the procedures specified in Reference Nonresidential Appendix NA1.4 and NA2.

(e) When the installation is complete, the builder or the installing subcontractor shall complete and sign the Certificate of Installation, and Certificate of Acceptance, and post a copy of the completed signed Certificates at the building site for review by the enforcement agency in conjunction with requests for final inspection. Alternatively, contingent upon approval of a Nonresidential Data registry, the enforcement agency may elect to view the certificates on an approved Data Registry. The builder or subcontractor shall also provide a signed copy of the Certificate of Installation and Certificate of Acceptance to the HERS Rater.

(f) The HERS Rater shall confirm that the Certificate of Installation and Certificate of Acceptance has been completed as required, and that the installer's diagnostic test results and all other Certificate of Installation and Certificate of Acceptance information shows compliance consistent with the requirements given in the plans and specifications and Certificate of Compliance approved by the local enforcement agency for the building.

(g) The HERS Rater shall complete the field verification and diagnostic testing as specified in NA1.6 and shall enter the test results into the HERS Provider Data Registry.

(h) The HERS Provider shall make available copies of the Certificate of Verification to the HERS Rater, builder, and the HERS Rater shall arrange to have a copy of the completed signed Certificate of Verification posted at the building site for review by the enforcement agency in conjunction with requests for final inspection. Alternatively, the enforcement agency may elect to view the certificates on an approved Data Registry.

(i) The enforcement agency shall not approve a building t for occupancy until the enforcement agency has received a completed signed copy of the Certificate of Installation, Certificate of Acceptance, and the Certificate of Verification at the building site in conjunction with requests for final inspection. Alternatively, contingent upon approval of a Nonresidential Data registry, the enforcement agency may elect to view the certificates on an approved Data Registry.

(j) The Registration Providers shall make document verification services available, via phone or internet communications interface, to the enforcement agency, builders and contractors, HERS Raters, the Energy Commission, and other authorized users of the Data Registry. The HERS Provider shall ensure that the Certificate of Verification information and approval signatures are retained as specified by Title 20 Section 1673(e).

NA1.3 Summary of Responsibilities

Section NA1.3 summarizes responsibilities set forth in Appendix NA1 and organizes them by the responsible party**.** This section is not, however, a complete accounting of the responsibilities of the respective parties.

NA1.3.1 Builder

The builder shall make arrangements for submittal of a copy of the Certificate of Compliance, for buildings with features requiring HERS verification, to the HERS Provider. The builder shall make arrangements for the services of a certified HERS Rater prior to installation of the features, so that once the installation is complete the HERS Rater has ample time to complete the field verification and diagnostic testing without delaying final approval of occupancy for the building permit by the enforcement agency. The builder shall make available to the HERS Rater a copy of the Certificate of Compliance that was approved/signed by the principal designer or owner and submitted to the enforcement agency.

The builder's employees or subcontractors responsible for the installation shall perform diagnostic testing, as specified in Reference Nonresidential Appendix NA1.4, NA1.5 and NA2, and shall complete and sign the Certificate of Installation and Certificate of Acceptance to certify the diagnostic testing results and that the installation work meets the requirements for compliance as shown on the Certificate of Compliance. The builder or subcontractor shall post a copy of the Certificate of Installation and Certificate of Acceptance at the construction site for review by the enforcement agency, in conjunction with requests for final inspection. Alternatively, contingent upon approval of a Nonresidential Data registry, the enforcement agency may elect to view the certificates on an approved Data Registry. The builder or subcontractor shall also make available a completed signed copy of the Certificate of Installation and Certificate of Acceptance to the HERS Rater.

If the builder chooses to utilize group sampling for HERS verification compliance, the builder, the builder's authorized representative, or the HERS Rater shall identify the units to be included in the sample group for field verification and diagnostic testing. The HERS Rater, with no direction from the installer or builder, shall randomly select one duct system from a sample group for field verification and diagnostic testing upon receiving the builder's or builder representative's request for HERS verification of that group. The builder or the HERS Rater shall arrange for registered copies of all Certificates of Verification to be posted at the building site for review by the enforcement agency in conjunction with requests for final inspection for each individual system. Alternatively, the enforcement agency may elect to view the certificates on an approved Data Registry.

The builder shall leave in the building, for the building owner at occupancy, copies of all compliance, operating, maintenance, and ventilation information specified in applicable sections of Title 24, Part 1, Section 10-103(b).

NA1.3.2 HERS Provider and Rater

The HERS Provider shall maintain a Data Registry with the capability to receive and store electronic data and image information provided by authorized users of the Data Registry sufficient to facilitate administration the of HERS compliance verification procedures and documentation procedures as described in NA1 and Joint Appendix JA7. Data Registry capabilities include a secure web-based

interface accessible by authorized users, and the ability to receive and process data transfer files as specified by Reference Joint Appendix JA7. The HERS Provider shall maintain a list of the buildings in the group from which sampling is drawn, the units selected for sampling, the units sampled and the results of the sampling, the units selected for re-sampling, the units that have been tested and verified as a result of re-sampling, and the corrective action taken.

The HERS Provider shall retain records of all information and approval signatures for completed Certificates of Compliance, Certificates of Installation, and Certificates of Verification for a period of ten years as specified by Title 20, Division 2, Chapter 4, Article 8, Section 1673(e).

The HERS Rater providing the diagnostic testing and verification shall transmit the test results to the Data Registry. Registered Certificates of Verification from the Provider shall be made available for the tested dwelling unit and each of the remaining untested dwelling units from a designated group for which compliance is verified based on the results of a sample test. The registered Certificates of Verification shall be made available to the HERS Rater, the builder, the enforcement agency, and to other authorized users of the HERS Provider data registry.

The HERS Rater shall produce a separate Certificate of Verification for each system that meets the diagnostic requirements for compliance. The registered Certificate of Verification shall have unique HERS Provider-designated identifiers for registration number, and sample group number, and shall include the lot location, building permit number, time and date stamp of issuance of the certificate, Provider logo or seal, and indicate if the space conditioning unit has been “tested or if it was a “not tested” unit approved as part of sample group. The HERS Rater shall not provide a Certificate of Verification for a building with a space conditioning unit that does not have a completed signed Certificate of Installation as specified in Section NA1.4 and Certificate of Acceptance as specified in Section NA1.5.

If field verification and diagnostic testing on a sampled space conditioning unit identifies a failure to meet the requirements for compliance credit, the HERS Rater shall report to the HERS Provider, the builder, and the enforcement agency that re-sampling will be required.

If re-sampling identifies another failure, the HERS Rater shall report to the HERS Provider, the builder, and the enforcement agency that corrective action, diagnostic testing, and field verification will be required for all the untested space conditioning units in the group. The report shall identify each space conditioning unit that shall be fully tested and corrected.

The HERS Provider shall also report to the builder when diagnostic testing and field verification has shown that the failures have been corrected for all of the space conditioning units.

When individual space conditioning unit testing and verification confirms that the requirements for compliance have been met, the HERS Provider shall make available to the builder and the enforcement agency a registered copy of the Certificate of Verification for each space conditioning unit in the group.

The HERS Provider shall file a report with the enforcement agency if there has been a sample group failure, explaining all actions taken (including field verification, testing, and corrective actions) to bring into compliance space conditioning units for which full testing has been required.

NA1.3.3 Third-Party Quality Control Program

Third Party Quality Control Programs (TPQCP) verify the work of participating installers, collect and evaluate more detailed data than necessary for compliance, identify in real time during the installation invalid and inaccurate installer testing and noncompliant installations, and enable corrected testing with the goal of bringing installations into compliance before the installer leaves the job site. TPQCP personnel and participating TPQCPs do not sign Certificate of Verification documentation, given that they provide assistance and quality control to HERS Raters, who remain responsible for this documentation.

An approved Third Party Quality Control Program shall:

(a) Provide training to participating program installers, installing but not limited to contractors, subcontractors, and technicians, to ensure proficiency in:

  i. Quality HVAC installation procedures, common causes of failure, and corrections.

  ii. Understanding of the Standards requirements for field verification and diagnostic testing of measures, which are subject to TPQCP program procedures.

  iii. Understanding all applicable specifications for field verification and diagnostic testing procedures specified in the Reference Residential Appendices.

  iv. Any applicable specialized TPQCP-specific procedures.

(b) Collect field verification and diagnostic test data (data) from participating installers for each installation completed,

(c) Confirm the location of the system undergoing testing using an electronic tracking means such as Global Positioning Satellite (GPS) technology,

(d) Provide data checking analysis to evaluate the validity and accuracy of the collected data to independently determine whether compliance has been achieved, and to uncover invalid or erroneous information,

(e) Provide real-time direction to the installer to retest and correct problems when data checking determines that compliance has not been achieved, or erroneous information is present, so that testing can be redone and corrections can be made before the installer leaves the site,

(f) Ensure the installer resubmits updated data from new testing when retesting and correction is completed,

(g) Maintain a database of all data submitted by participating TPQCP installers, and

(h) Enable Energy Commission staff to query retained TPQCP data or documents.

TPQCPs do not impose restrictions on HERS Raters or Providers that limit their independence or ability to properly perform their functions, nor do they impose restrictions on the HERS Rater's use of equipment (beyond those required by the Energy Commission).

Refer to NA1.7 for additional detail describing the roles and responsibilities and approval procedures for TPQCP.

NA1.3.4 Enforcement Agency

The enforcement agency, at its discretion, may require independent testing and field verification to be scheduled so that it can be completed in conjunction with the enforcement agency's required inspections. The enforcement agency may also require that it observe the diagnostic testing and field verification performed by builders or subcontractors and the certified HERS Rater in conjunction with the enforcement agency's required inspections to corroborate the results documented on the Certificate of Installation, Certificate of Acceptance, and the Certificate of Verification.

For buildings for which field verification and diagnostic testing is required for compliance, the enforcement agency shall not approve a building for occupancy until the enforcement agency has received a completed Certificate of Installation and Certificate of Acceptance that has been signed by the builder/owner or installing subcontractor, and a completed registered copy of the Certificate of Verification that has been made available by the HERS Provider Data Registry. The Certificates shall be posted at the building site for review by the enforcement agency in conjunction with requests for final inspection. Alternatively, contingent upon approval of a Nonresidential Data registry, the enforcement agency may elect to view the certificates on an approved Data Registry.

NA1.4 Installer Requirements –Certificate of Installation Documentation

Certificates of Installation are required for all buildings and shall include the required compliance information for all of the installed space conditioning systems in the building that must comply. When compliance requires HERS verification, the builder's employees or subcontractors shall perform diagnostic testing according to the procedures specified in Reference Nonresidential Appendix NA2, and verify that the measures meet the requirements for compliance shown on the Certificate of Compliance. The owner or installer shall complete a Certificate of Installation and sign the certificate to certify that the installation work meets the requirements for compliance.

A signed copy of the Certificate of Installation shall be posted at the job site for review by the enforcement agency, in conjunction with requests for final inspection. Alternatively, contingent upon approval of a Nonresidential Data registry, the enforcement agency may elect to view the certificates on an approved Data Registry. A copy shall be provided to the HERS Rater.

When the Standards do not require the Certificate of Installation to be registered, the Certificates of Installation that are posted in the field for review by the enforcement agency at final inspection are not required to be registered certificates from a Data Registry, but shall conform to all other applicable requirements of 10-103(a)3.

NA1.5 Acceptance Procedures - Certificate of Acceptance Documentation

When compliance requires acceptance testing, the acceptance test Field Technician shall perform the required field verification and diagnostic testing according to the procedures specified in Reference Nonresidential Appendix NA2, and verify that the work meets the requirements for compliance as shown on the Certificate of Compliance. The owner or installer shall complete a Certificate of Installation and sign the certificate to certify that the installation work meets the requirements for compliance credit.

A signed copy of the Certificate of Acceptance shall be posted at the job site for review by the enforcement agency, in conjunction with requests for final inspection. Alternatively, contingent upon approval of a Nonresidential Data registry, the enforcement agency may elect to view the certificates on an approved Data Registry. A copy shall be provided to the HERS Rater.

When the Standards do not require the Certificate of Acceptance to be registered, the Certificates of Acceptance that are posted in the field for review by the enforcement agency at final inspection are not required to be registered certificates from a Data Registry, but shall conform to all other applicable requirements of 10-103(a)4.

NA1.6 HERS Procedures – Verification, Testing, and Sampling

At the builder's or owner's option, HERS field verification and diagnostic testing shall be completed either for each system or dwelling unit, or alternatively for a sample from a designated group of systems or dwelling units. Field verification and diagnostic testing for compliance shall use the diagnostic procedures in Reference Nonresidential Appendix NA2. If the builder or owner elects to demonstrate HERS verification compliance utilizing group sampling, the applicable procedures described in NA1.6.2, NA1.6.3 and NA1.6.4 shall be followed.

NA1.6.1 HERS Procedures - General Requirements

The general requirements in NA1.6.1 are applicable to all measures that require HERS verification for compliance, and shall be incorporated into procedures specified in Sections NA1.6.2, NA1.6.3, and NA1.6.4 whenever applicable.

The builder or subcontractor shall make available to the HERS Rater a copy of the Certificate of Compliance approved/signed by the system designer/builder or owner, a copy of the Certificate of Installation as described in NA1.4, and a copy of the Certificate of Acceptance as described in NA1.5. Prior to performing field verification and diagnostic testing, the HERS Rater shall confirm that the Certificate of Installation and the Certificate of Acceptance have been completed as required, and that the installer's diagnostic test results and all other Certificate of Installation and Certificate of Acceptance information indicate compliance consistent with the Certificate of Compliance.

The HERS Rater shall perform all applicable field verification and diagnostic testing.

If field verification and diagnostic testing determines that the requirements for compliance are met, the HERS Rater shall submit or make arrangements for submittal of the Certificate of Verification information to the HERS Provider data registry.

Authorized users of the HERS Provider data registry that are not certified HERS Raters may provide *documentation author* support to facilitate submittal of the Certificate of Verification information to the HERS Provider data registry on behalf of the HERS Rater when such facilitation has been authorized by the HERS Rater. *Documentation authors* shall provide an electronic signature to the Data Registry to certify the documentation is accurate and complete.

The Certificate of Verification shall be electronically signed by the HERS Rater who performed the field verification and diagnostic testing services to certify that the information provided on the Certificate is true and correct.

A completed signed registered copy of the Certificate of Verification shall be posted at the building site for review by the enforcement agency in conjunction with requests for final inspection. Alternatively, the enforcement agency may elect to view the certificates on an approved Data Registry.

The HERS Provider shall make document verification services available, to enforcement agencies, builders and contractors, HERS Raters, the Energy Commission, and other authorized users of the HERS Provider data registry.

NA1.6.2 HERS Procedures - Initial Field Verification and Diagnostic Testing

The HERS Rater shall diagnostically test and field verify the first system or dwelling unit of each building when the builder elects to demonstrate HERS verification compliance utilizing group sampling. This initial testing allows the builder to identify and correct any potential construction flaws or practices in advance of subsequent further installations. If field verification and diagnostic testing determines that the requirements for compliance are met, the HERS Rater shall transmit the test results to the HERS Provider registry, whereupon the Provider shall make available a copy of the registered Certificate of Verification to the HERS Rater, the builder, and the enforcement agency.

NA1.6.3 HERS Procedures -– Group Sample Field Verification and Diagnostic Testing

After the initial field verification and diagnostic testing is completed, the builder or the HERS Rater shall identify a group of up to seven individual systems or dwelling units in the building from which a sample will be selected and identify the names and license numbers of the subcontractors responsible for the installations requiring field verification and diagnostic testing. The date the first system or dwelling unit in the group is identified shall establish the start date for the new opened sample group. The HERS Provider shall recorded and track the start date for each sample group.

If dwelling units have multiple measures requiring HERS verification installed, each dwelling unit in a designated group shall have the same measures requiring HERS verification as the other dwelling units in the designated group. If some dwelling units have installed a different set of measures requiring HERS verification, those dwelling units shall be in a separate group.

If the dwelling units in a designated group have multiple measures that require HERS verification, sample testing for individual measures may be conducted in any of the dwelling units in the group - it is not required that all of the sample tests for all of the individual measures be completed in the same dwelling unit. Individual measures shall be allowed to be included in a group regardless of whether compliance requires one sample test, or if compliance requires more than one sample test (up to100% sample test rate) be reported for such individual measures.

If dwelling units have central forced-air space conditioning equipment that introduces outside air into the conditioned space utilizing means that connect outside air ventilation ducts directly to the dwelling unit's central forced air duct system (Central Fan-Integrated Ventilation System or CFI Ventilation System), the CFI ventilation technology shall be considered a separate measure for HERS verification sampling purposes, and dwellings with CFI ventilation systems shall be placed in separate groups from other dwelling units that do not utilize CFI ventilation technology.

For newly constructed buildings, systems or dwelling units in a designated group shall all be located within the same enforcement agency jurisdiction. Refer to Section NA1.8 for requirements for sample groups applicable to alterations.

The HERS Rater shall verify that a Certificate of Compliance a Certificate of Installation, and a Certificate of Acceptance have been completed for each unit having features requiring HERS verification. The HERS Rater shall also confirm that the Certificate of Installation and Certificate of Acceptance have been completed as required, and that the field technician's diagnostic test results and all other Certificate of Acceptance information shows compliance consistent with the Certificate of Compliance. The group shall be closed prior to selection of the sample that will be field verified and diagnostically tested.

The builder or the HERS Rater may request removal of units from the group by notifying the HERS Provider prior to selection of the sample that will be tested and shall provide justification for the change. Removed units which are installed shall either be field verified and diagnostically tested individually or shall be included in a subsequent group for sampling.

The HERS Rater, with no direction from the installer, builder, or owner shall randomly select one system or dwelling unit from the "closed" group for field verification and diagnostic testing upon receiving the builder's or builder representative's request for HERS verification of that group. The HERS Rater shall enter the test and/or field verification results into the Data Registry regardless of whether the results indicate a pass or fail. If the test fails then the failure must be entered into the Provider's Data Registry even if the installer immediately corrects the problem. In addition, the procedures in NA1.6.4 shall be followed.

If field verification and diagnostic testing determines that the requirements for compliance are met, the HERS Rater shall enter the test results into the Data Registry. Whereupon, the Provider shall make available to the HERS Rater, the builder, the enforcement agency and other approved users of the Data Registry, a copy of the registered Certificate of Verification for the "tested" system or dwelling unit and a Certificate of Verification shall also be provided for each "not tested" system or dwelling unit in the sample group. The Certificate of Verification shall report the successful diagnostic testing results and conclusions regarding compliance for the "tested" system or dwelling unit. The Certificate of Verification shall also provide:

(a) Building permit number for the unit.

(b) Registration Number – that conforms to the numbering convention specified in Reference Joint Appendix JA7.

(c) Group Number – that conforms to the numbering convention specified in Reference Joint Appendix JA7.

(d) Time and date stamp of the Provider's issuance of the registered Certificate of Verification.

(e) Provider's logo, water mark, or official seal.

(f) Indication that the conditioning unit was a "tested" unit, or was a "not tested" unit from the sample group.

The registered Certificate of Verification shall not be provided for measures that have not yet been installed.

Whenever the builder changes subcontractors who are responsible for installation of the systems or dwelling unit measures, the builder shall notify the HERS Rater of the subcontractor change, and terminate sampling for any affected group. All units requiring HERS Rater field verification and diagnostic testing for compliance that were installed by previous subcontractors or were subject to field verification and diagnostic testing under the supervision of a previous HERS Provider, for which the builder does not have a completed Certificate of Verification, shall either be individually tested or included in a separate group for sampling. Systems or dwelling units completed by new subcontractors shall either be individually tested or shall be included in a new separate group for sampling.

The HERS Rater shall not notify the builder when sample testing will occur prior to the completion of the work that is to be tested, or prior to entry of the data from the Certificate of Installation.

The HERS Provider shall close a group within 6 months after the group was started/opened. When such group closure occurs, the HERS Provider shall notify the builder or contractor and HERS Rater that the group has been closed, and a sample shall be selected for field verification and diagnostic testing.

NA1.6.4 HERS Procedures - Re-sampling, Full Testing and Corrective Action

"Re-sampling" refers to the procedure that requires testing of additional systems or dwelling units within a group when the selected sample from a group fails to comply with the HERS verification requirements.

When a failure is encountered during sample testing, the failure shall be entered into the Provider's Data Registry. Corrective action shall be taken on the failed system and then retested to verify that corrective action was successful. Corrective action and retesting on the system shall be repeated until the testing indicates compliance and the results have been entered into the Data Registry, whereupon, a registered Certificate of Verification for the system shall be made available to the HERS Rater, the builder, the enforcement agency, and other authorized users of the Data Registry.

In addition, the HERS Rater shall conduct re-sampling to assess whether the first failure in the group is unique or if the rest of the units in the group are likely to have similar failings.

NA1.6.4.1 Re-sampling procedures for a "closed" group

The HERS Rater shall randomly select for re-sampling one of the remaining untested systems or dwelling units in the group for testing.

If testing in the re-sample confirms that the requirements for compliance credit are met, then the system or dwelling unit with the failure shall not be considered an indication of failure in the other units in the group. The HERS Rater shall transmit the re-sample test results to the Data Registry, whereupon the Provider shall make available to the HERS Rater, the builder, the enforcement agency, and other authorized users of the Data Registry, a copy of the registered Certificate of Verification for each of the remaining units in the group including the dwelling unit in the re-sample.

If field verification and diagnostic testing of the second sample results in a failure, the HERS Rater shall report the second failure to the HERS Provider, the builder, and the enforcement agency. All

systems or dwelling units in the group must thereafter be individually field verified and diagnostically tested.

NA1.6.4.2 Corrective Action

The builder shall take corrective action on any system or dwelling unit in the group that failed to comply when tested. In cases where corrective action would require destruction of building components, and the performance compliance method is used, the builder may choose to reanalyze compliance and choose different measures that will achieve compliance. In this case a new Certificate of Compliance shall be completed and submitted to the HERS Provider, the HERS Rater and the enforcement agency. The HERS Rater shall conduct field verification and diagnostic testing for each of these measures to verify that problems have been corrected and that the requirements for compliance have been met. Upon verification of compliance, the HERS Rater shall enter the test results into the Data Registry. Whereupon the Provider shall make available to the HERS Rater, the builder, the enforcement agency, and other authorized users of the Data Registry a copy of the registered Certificate of Verification for each individual unit in the group.

The HERS Provider shall file a report with the enforcement agency explaining all action taken (including field verification, diagnostic testing, and corrective action,) to bring into compliance systems or dwelling units for which full testing has been required. If corrective action requires work not specifically exempted by the CMC or the CBC, the builder shall obtain a permit from the enforcement agency prior to commencement of any of the work.

Corrections to avoid reporting a failure to the Data Registry shall not be made to a sampled or re-sampled feature after the HERS Rater selects the sample feature, or during the course of HERS testing of the unit. If it becomes evident that such corrections have been made to a sampled or re-sampled feature to avoid reporting a failure, field verification and diagnostic testing shall be required to be performed on 100 percent of the individual systems or dwelling units in the group.

NA1.7 Third Party Quality Control Programs

The Energy Commission may approve Third Party Quality Control Programs (TPQCP) to verify the work of participating installers, collect and evaluate more detailed data than necessary for compliance, identify in real time during the installation invalid and inaccurate installer testing and noncompliant installations, and enable corrected testing with the goal of bringing installations into compliance before the installer leaves the job site. TPQCP personnel and participating TPQCP installation contractors do not have the authority to sign Certificate of Verification documentation as a HERS Rater.

NA1.7.1 Third Party Quality Control Program Responsibilities

An approved Third Party Quality Control Program shall:

(a) Provide training to participating program installers (including contractors, subcontractors, and technicians) to ensure proficiency in:

   i. Quality HVAC installation procedures, common causes of failure, and corrections.

ii. Understanding of the Standards requirements for field verification and diagnostic testing of measures, which are subject to TPQCP program procedures

iii. Understanding all applicable specifications for field verification and diagnostic testing procedures specified in the Reference Residential Appendices.

iv. Any applicable specialized TPQCP-specific procedures.

(b) Collect field verification and diagnostic test data (data) from participating installers for each installation completed.

(c) Automatically confirm the location of the system undergoing testing using an electronic tracking means such as Global Positioning Satellite (GPS) technology if available.

(d) Provide data checking analysis to evaluate the validity and accuracy of the collected data to independently determine whether compliance has been achieved. Data checking based on more detailed data than is required for showing compliance must be able to uncover invalid or erroneous information supplied by installers.

(e) Provide direction to the installer to retest and correct problems when data checking determines that compliance has not been achieved. The direction to the installer shall occur in real time so that testing can be redone and corrections can be made before the installer leaves the site.

(f) Ensure the installer resubmits updated data from new testing when retesting and correction is completed.

(g) Maintain a database of all data submitted by all participating TPQCP installers.

(h) Provide functionality that enables Energy Commission staff to query retained TPQCP data or documents.

(i) TPQCP shall not impose restrictions on the HERS Rater or the HERS Provider that limit their independence, or the ability of the HERS Rater or the HERS Provider to properly perform their functions.

(j) TPQCP shall not impose restrictions on the HERS Rater's use of equipment beyond those required by the Energy Commission.

NA1.7.2 Requirements for Data Collected by a Third Party Quality Control Program

TPQCP data collection shall conform to the following requirements:

(a) Data shall be more detailed than the data required for showing compliance with the Standards.

(b) Data shall enable the TPQCP to conduct an independent check on the validity and accuracy of the installer's claim that compliance has been achieved.

(c) Data shall not be alterable by the installer to indicate that compliance has been achieved when in fact compliance has not been achieved.

NA1.7.3 HERS Provider Responsibilities

HERS Providers shall conform to the following requirements:

(a) HERS Providers shall assign a HERS Rater to conduct independent field verification and diagnostic testing of the installation work performed by the participating Third Party Quality Control Program installing contractors, and to submit Certificates of Verification at the close of the sampling group.

(b) HERS Providers shall notify enforcement agencies when groups close or exceed six months without closing.

(c) HERS Providers shall explain, in their applications for approval by the Energy Commission, the way in which their program will work with TPQCPs.

NA1.7.4 HERS Rater Responsibilities

HERS Raters shall conform to the following requirements:

(a) Complete all of the responsibilities of a HERS Rater as specified in Appendix NA1, with the exception that sampling procedures utilized for TPQCP installations shall be limited to sampling of a "closed" group as described in Section NA1.6. However, the sample tested shall be selected and field verified from within a group of up to thirty dwelling units.

(b) HERS Raters shall be independent entities from the Third Party Quality Control Program.

(c) If re-sampling is required, the HERS Rater shall perform full testing and corrective action as specified in Section NA1.6 with the exception that re-sampling shall be completed for a minimum of one out of every thirty dwelling units from the group.

NA1.7.5 Conflict of Interest Guidelines

The TPQCP shall meet the requirements imposed on a HERS Rater specified in the Energy Commission's HERS Program regulations (California Code of Regulations, Title 20, Division 2, Chapter 4, Article 8, Sections 1670 -1675), including the requirement to be an independent entity from the builder, the HERS Provider, the HERS Rater that provides independent field verifications, and the subcontractor installer as specified by Section 1673(j). However, a Third Party Quality Control Program may have business relationships with installers participating in the program to advocate or promote the program and an installer's participation in the program, and to advocate or promote products that the Third Party Quality Control Program sells to installers as part of the Program.

NA1.7.6 Conditions of TPQCP Approval

Prior to approval by the Commission, the Third Party Quality Control Program shall provide a detailed explanation to the Commission of the following:

(a) The data that is to be collected from the installers.

(b) The data checking process that will be used to evaluate the validity and accuracy of the data submitted by the TPQCP installation contractors.

(c) The justification for why this data checking process will provide strong assurance that the installation actually complies.

(d) A detailed description of the database that will be maintained by the TPQCP, and the functionality that will allow Energy Commission staff to query retained data or documents.

(e) A detailed explanation of how their data input complies with Reference Joint Appendix JA7.9.

(f) A detailed description of the training that will be provided to TPQCP installers.

(g) The procedures the TPQCP will follow to ensure the installer makes appropriate on-site data submittals, installation corrections.

The Third Party Quality Control Program may apply for a confidential designation for information submitted to the Energy Commission as specified in the Commission's Administrative Regulations (California Code of Regulations, Title 20, Division 2, Chapter 7, Article 2, Section 2505).

NA1.7.7 Training for TPQCP Installation Contractors

As a condition to participation in the TPQCP program, all approved TPQCP installing contractors and the TPQCP installing contractor's responsible installation technicians shall be trained and confirmed to be proficient in the following:

(a) Quality installation procedures.

(b) The requirements of this Appendix.

(c) Any applicable specialized TPQCP-specific procedures.

The training requirements also apply to the installing contractor's specialty subcontractors who provide Third Party Quality Control Program services. All installation verification and diagnostic work performed in the program shall be subject to the same quality assurance procedures as required by the Energy Commission's HERS program regulations.

NA1.8 Installer Requirements and HERS Procedures for Alterations

This section on alterations describes the differences that apply to alterations. Otherwise the procedures and requirements detailed in previous sections of NA1 shall also apply to alterations. For alterations, building owners or their agents may carry out the actions that are assigned to builders in previous sections of Appendix NA1.

Applicable procedures for registration of compliance documents described in Appendix NA1 shall also apply to alterations.

When compliance for an alteration requires diagnostic testing and field verification, the building permit applicant may choose for the testing and field verification to be completed for the permitted system or dwelling unit alone, or alternatively as part of a designated sample group of space conditioning systems for which the same installing company has completed work that requires field verification and diagnostic testing for compliance.

When sampling is utilized for HERS verification compliance for alterations, the buildings in a designated sample group are not required to be located within the same enforcement agency

jurisdiction. However, to enable the enforcement agency to schedule testing to accomplish the corroboration of field verification and diagnostic testing procedures performed by builders, subcontractors, or certified HERS Raters as described in Section NA1.3.4, the enforcement agency may require that a separate system from the sample group that is located within its jurisdiction be tested.

The building permit applicant shall submit or make arrangements for submittal of the required Certificate of Compliance information to the HERS Provider and complete the applicable Certificate of Compliance documentation in accordance with the requirements in Standards Section 10-103(a)1 and 10-103(a)2.

When the enforcement agency does not require building design plans to be submitted with the application for a building permit for an alteration, any applicable registered Certificate of Compliance documentation specified in 10-103(a)1 is not required to be approved by the enforcement agency prior to issuance of a building permit, but shall be approved by the enforcement agency prior to final inspection of the dwelling unit, and shall be made available to the enforcement agency for all applicable inspections as specified in Standards Section 10-103(a)2A.

HERS Raters or other authorized users of the Data Registry may provide *documentation author* support to facilitate the submittal of any required Certificate of Compliance information to the enforcement agency on behalf of the building owner or agent of the building owner, when such facilitation has been authorized by the building owner or agent of the building owner. The building owner or agent of the building owner who is eligible under Division 3 of the Business and Professions Code to take responsibility for the design specification for the alteration shall sign the Certificate of Compliance, to certify the information provided on the Certificate is true and correct, to certify conformance with Part 6, and shall submit the Certificate of Compliance to the enforcement agency for approval.

The building permit applicant or building owner or agent shall make available to the HERS Rater a copy of the registered Certificate of Compliance approved by the enforcement agency.

The installer or field technician shall perform diagnostic testing and the procedures specified in Reference nonresidential Appendix NA1.4 and NA2.

When the installation is complete, the person responsible for the installation shall complete and sign the Certificate of Installation, and post a copy at the building site for review by the enforcement agency in conjunction with requests for final inspection. Alternatively, contingent upon approval of a Nonresidential Data registry, the enforcement agency may elect to view the certificates on an approved Data Registry. The owner or subcontractor shall also provide a completed signed copy of the Certificate of Installation to the HERS Rater.

The field technician responsible for performing the acceptance test on the system shall complete the Certificate of Acceptance. The Certificate of Acceptance shall be signed by the system designer or installing contractor who is responsible for the system performance. A copy of the completed signed Certificate shall be posted at the building site for review by the enforcement agency in conjunction with requests for final inspection. Alternatively, contingent upon approval of a Nonresidential Data registry, the enforcement agency may elect to view the certificates on an approved Data Registry. The owner or subcontractor shall also provide a completed signed copy of the Certificate of Installation to the HERS Rater.

The HERS Rater shall verify that the Certificate of Compliance, Certificate of Installation, and Certificate of Acceptance have been completed for each unit having features requiring HERS verification, and that the field technician's diagnostic test results and all other Certificate of Acceptance information shows compliance consistent with the Certificate of Compliance for the system.

If group sampling is utilized for compliance, the HERS Rater shall define a group of up to seven systems or dwelling units for sampling purposes, requiring that all systems or dwelling units within the group have been installed by the same company. The installing company may request a group for sampling that is smaller than seven systems or dwelling units. Whenever the HERS Rater for an installing company is changed, a new group shall be established.

Re-sampling, full testing and corrective action shall be completed if necessary as specified in NA1.6.4. For alterations, the installing company shall offer to complete field verification and diagnostic testing and any necessary corrective action at no charge to building owners in the group.

The enforcement agency shall not approve the alteration until the enforcement agency has received a completed Certificate of Installation as specified in NA1.4, Certificate of Acceptance as specified in Section NA1.5, and a copy of the registered Certificate of Verification as specified in NA1.6.

Third Party Quality Control Programs, as specified in NA1.7, may also be used with alterations. When a Third Party Quality Control Program is used, the enforcement agency may approve compliance based on the Certificate of Installation prior to completion of the Certificate of Verification, where data checking has indicated that the unit complies, on the condition that a Certificate of Verification will be submitted if the required HERS verification procedures determine that re-sampling, full testing or corrective action is necessary, such work shall be completed.

NA1.9 Acceptance Test Technicians Alternative Procedure

When HERS field verification and diagnostic testing is required to be performed in accordance with NA1 and NA2 procedures, compliance with HERS verification may alternatively be satisfied by a certified Acceptance Test Technician (ATT) according to the requirements specified in this section.

NA1.9.1 Field Verification by the Acceptance Test Technician

Under this alternative procedure, when the Certificate of Compliance indicates that HERS field verification and diagnostic testing is required as a condition for compliance with Title 24, Part 6, a certified ATT may perform the verification to satisfy the condition of compliance, at the discretion of the enforcement agency. Systems verified under this procedure are not eligible for use of the sampling procedures described in NA1.6.

NA1.9.2 Certificate of Acceptance Documentation

The ATT shall perform the required field verification and diagnostic testing according to the procedures specified in Reference Nonresidential Appendix NA2, and verify that the work meets the requirements for compliance as shown on the Certificate of Compliance. The owner or installer shall complete a Certificate of Installation and sign the certificate to certify that the installation work meets the requirements for compliance credit.

The ATT shall sign a copy of the Certificate of Acceptance and submit a copy to the approved ATTCP. The acceptance procedures for the Certificate of Acceptance shall conform to the requirements in NA1.5.

A signed copy of the Certificate of Acceptance shall be posted at the job site for review by the enforcement agency, in conjunction with requests for final inspection in accordance with NA1.3.4.

The Certificate of Acceptance that is posted in the field for review by the enforcement agency at final inspection shall conform to all applicable requirements of 10-103(a)4.

(This page intentionally left blank.)

Nonresidential Appendix NA2

Appendix NA2 – Nonresidential HERS Field Verification and Diagnostic Test Procedures

NA2.1 Procedures for Field Verification and Diagnostic Testing of Air Distribution Systems

NA2.1.1 Purpose and Scope

1. NA2.1 contains procedures for field verification and diagnostic testing for air leakage in single zone, constant volume, nonresidential air distribution systems serving zones with 5000 ft² of conditioned floor area or less as required by Standards section 141.0(b)2Dii.
2. NA2.1 procedures are applicable to new space conditioning systems in newly constructed buildings and to new or altered space conditioning systems in existing buildings.
3. NA2.1 procedures shall be used by installers, HERS Raters, and others who are required to perform field verification of air distribution systems in accordance with NA1 procedures and Standards Section 120.4(g) and 141.0(b)2D.
4. Table NA2.1-1 provides a summary of the duct leakage verification and diagnostic test protocols included in Section NA2.1, and the compliance criteria.

NA2.1.2 Instrumentation Specifications

The instrumentation for the air distribution diagnostic measurements shall conform to the following specifications:

NA2.1.2.1 Pressure Measurements

All pressure measurements shall be measured with measurement systems (i.e. sensor plus data acquisition system) having an accuracy of plus or minus 0.2 Pa. All pressure measurements within the duct system shall be made with static pressure probes, Dwyer A303 or equivalent.

NA2.1.2.2 Duct Leakage Measurements

All measurements of duct leakage airflow shall have an accuracy of plus or minus 3 percent of measured airflow or better using digital gauges.

NA2.1.2.3 Calibration

All instrumentation used for duct leakage diagnostic measurements shall be calibrated according to the manufacturer's calibration procedure to conform to the accuracy requirement specified in Section NA2.1.2.

NA2.1.2.4 Diagnostic Apparatus

NA2.1.2.5 Apparatus for Duct Pressurization and Leakage Flow Measurement

The apparatus for duct system pressurization and duct system leakage measurements shall consist of a duct system pressurization and leakage airflow measurement device meeting the specifications in Section NA2.1.2.

NA2.1.2.6 Apparatus for Smoke-Test of Accessible-Duct Sealing (Existing Duct Systems)

The apparatus for determining leakage in and verifying sealing of all accessible leaks in existing duct systems provide means for introducing controllable amounts of non-toxic visual or theatrical smoke into the duct pressurization apparatus for identifying leaks in accessible portions of the duct system. The means for generating smoke shall have sufficient capacity to ensure that any accessible leaks will emit visibly identifiable smoke.

NA2.1.3 Verification and Diagnostic Procedures

NA2.1.3.1 Nominal Air Handler Airflow

Nominal air handler airflow shall be calculated according to one of the following methods as applicable:

(a) For heating-only systems, the nominal air handler airflow shall be 21.7 CFM per kBtu/hr of rated heating output capacity.

(b) For split or packaged cooling systems with only one indoor unit, the nominal air handler airflow shall be 400 CFM per nominal ton of outdoor condensing unit cooling capacity as specified by the manufacturer.

(c) For small duct high velocity systems, the nominal air handler airflow shall be 250 CFM per nominal ton of outdoor condensing unit cooling capacity as specified by the manufacturer.

(d) For multiple-split systems that provide cooling, the nominal air handler airflow for each indoor unit shall be 350 CFM per nominal ton of indoor unit cooling capacity as specified by the manufacturer.

NA2.1.3.2 Diagnostic Duct Leakage

Diagnostic duct leakage measurement shall be used by installers and HERS Raters to verify that duct leakage meets the compliance criteria for sealed duct systems for which field verification and diagnostic testing is required. Table NA2.1-1 summarizes the diagnostic test procedures that shall be used to demonstrate compliance.

Table NA2.1-1 – Duct Leakage Verification and Diagnostic Test Protocols

Case	User and Application	Procedure(s)
Sealed and tested new duct systems	Installer Testing HERS Rater Testing	NA2.1.4.2.1
Sealed and tested altered existing duct systems	Installer Testing HERS Rater Testing	NA2.1.4.2.1
Sealed and tested altered existing duct systems	Installer Testing and Inspection HERS Rater Testing and Verification	NA2.1.4.2.2 NA2.1.4.2.3 NA2.1.4.2.4

NA2.1.3.2.1 Diagnostic Duct Leakage from Fan Pressurization of Ducts

The objective of this procedure is for an installer to determine and a HERS Rater to verify the leakage of a new or altered duct system. The duct leakage shall be determined by pressurizing the entire duct system ducts to 25 Pa (0.1 inches water) with respect to outside. The following procedure shall be used for the fan pressurization tests:

(a) Verify that the air handler, supply and return plenums and all the connectors, transition pieces, duct boots, and registers are installed, and ensure the following locations have been sealed:

1. Connections to plenums and other connections to the air-handling unit.
2. Refrigerant line and other penetrations into the air-handling unit.
3. Air handler access door or panel (do not use permanent sealing material, metal tape is acceptable).

The entire duct system including the air- handler shall be included in the test.

(b) For newly installed or altered ducts, verify that cloth backed rubber adhesive duct tape has not been used.

(c) Temporarily seal all the supply registers and return grilles, except for one large centrally located return grille or the air handler cabinet access door or panel. Verify that all outside air dampers and/or economizers are sealed prior to pressurizing the system.

(d) Attach the fan flowmeter device to the duct system at the unsealed return grille or the air handler cabinet access door or panel.

(e) Install a static pressure probe at a supply register located close to the air handler, or at the supply plenum.

(f) Adjust the fan flowmeter to produce a positive 25 Pa (0.1 inches water) pressure at the supply register or the supply plenum with respect to the outside or with respect to the building space with the entry door open to the outside.

(g) Record the flow through the flowmeter, this is the duct leakage flow at 25 Pa (0.1 inches water).

(h) Divide the duct leakage flow by the nominal air handler airflow determined by the procedure in Section NA2.1.4.1 and convert to a percentage. If the duct leakage flow

percentage is equal to or less than the target compliance criterion from Table NA2.1-1, the system passes.

NA2.1.3.2.2 Sealing of All Accessible Leaks

For altered existing duct systems that are unable to pass the leakage test in Section NA2.1.4.2.1, the objective of this test is to verify that all accessible leaks are sealed. The following procedure shall be used:

(a) Complete the leakage test specified in Section NA2.1.4.2.1.

(b) Seal all accessible ducts.

(c) After sealing is complete, again use the procedure in NA2.1.4.2.1 to measure the leakage after duct sealing.

(d) Complete the Smoke Test as specified in NA2.1.4.2.3.

(e) Complete the Visual Inspection as specified in NA2.1.4.2.4.

All duct systems that fail to pass the leakage test specified in Section NA2.1.4.2.1 shall be tested and inspected by a HERS Rater to verify that all accessible ducts have been sealed and damaged ducts have been replaced. Compliance with HERS verification requirements shall not utilize group sampling procedures when the installer used the Sealing of All Accessible Leaks procedure in Section NA2.1.4.2.2.

NA2.1.3.2.3 Smoke-Test of Accessible-Duct Sealing

For altered existing ducts that fail the leakage tests, the objective of the smoke test is to confirm that all accessible leaks have been sealed. The following procedure shall be used:

(a) Inject either theatrical or other non-toxic smoke into a fan pressurization device that is maintaining a duct pressure difference of 25 Pa (0.1 inches water) relative to the duct surroundings, with all grilles and registers in the duct system sealed.

(b) Visually inspect all accessible portions of the duct system during smoke injection.

(c) The system shall pass the test if one of the following conditions is met:

1. No visible smoke exits the accessible portions of the duct system.
2. Smoke only emanates from the furnace cabinet which is gasketed and sealed by the manufacturer and no visible smoke exits from the accessible portions of the duct system.

NA2.1.3.2.4 Visual Inspection of Accessible Duct Sealing

For altered existing duct systems that are unable to pass the leakage test in Section NA2.1.4.2.1, the objective of this inspection in conjunction with the smoke test (Section NA2.1.4.2.3) is to confirm that all accessible leaks have been sealed. Visually inspect to verify that the following locations have been sealed:

(a) Connections to plenums and other connections to the air-handling unit.

(b) Refrigerant line and other penetrations into the air-handling unit.

(c) Air handler access door or panel (do not use permanent sealing material, metal tape is acceptable).

(d) Register boots sealed to surrounding material.

(e) Connections between lengths of duct, as well as connections to takeoffs, wyes, tees, and splitter boxes.

NA2.2 Field Verification and Diagnostic Testing of Mechanical Ventilation Systems

NA2.2.1 Purpose and Scope

NA2.2. contains procedures for verification of heat recovery efficiency and fan efficacy, and for measuring the airflow rate for mechanical ventilation systems.

NA2.2. is applicable to mechanical ventilation systems in high-rise residential dwelling units.

NA2.2. provides required procedures for installers, HERS raters and others who are required to perform field verification of mechanical ventilation systems for compliance with Part 6.

Table NA2.2--1 – Summary of Verification and Diagnostic procedures

Diagnostic	Description	Procedure
Dwelling-Unit Mechanical Ventilation Airflow	Verification of the dwelling unit ventilation system airflow rate. Continuous Operation	NA2.2.4.1
Dwelling-Unit Mechanical Ventilation Airflow	Verification of the dwelling unit ventilation system airflow rate. Intermittent Operation	NA2.2.4.2
Kitchen Local Mechanical Exhaust Verification	Verification of vented range hood airflow rate or capture efficiency	NA2.2.4.1.4
Heat Recovery Ventilation (HRV) or Energy Recovery Ventilation (ERV) Rated Performance Verification	Verification of the HRV/ERV fan efficacy (W/cfm) or heat recovery efficiency.	NA2.2.4.1.5

NA2.2.2 Instrumentation Specifications

The instrumentation for the air distribution diagnostic measurements shall conform to the following specifications:

NA2.2.2.1 Pressure Measurements

All pressure measurements shall be measured with measurement systems (i.e., sensor plus data acquisition system) having an accuracy equal to or better than ± 1% of pressure reading or ± 0.2 Pa (0.0008 inches water) (whichever is greater). All pressure measurements within the duct system shall be made with static pressure probes such as Dwyer A303 or equivalent.

NA2.2.2.2 Airflow Rate Measurements

All measurements of ventilation fan airflow rate shall be made with an airflow rate measurement apparatus (i.e., sensor plus data acquisition system) having an accuracy equal to or better than ± 10% of reading. The apparatus shall have an accuracy specification that is applicable to the airflow rates that must be verified utilizing the procedures in Section NA2.2.4.

NA2.2.2.3 Calibration

All instrumentation used for mechanical ventilation system airflow rate diagnostic measurements shall be calibrated according to the manufacturer's calibration procedure to ensure the airflow measurement apparatus conforms to the accuracy requirement specified in Section NA2.2.2.2.

NA2.2.3 Diagnostic Apparatus for Measurement of Ventilation System Airflow

Ventilation system airflow rate shall be measured using one of the apparatuses listed in Section NA2.2.3. The apparatus shall produce airflow rate measurements that conform to the accuracy requirements specified in Section NA2.2.2 for measurements of high-rise residential mechanical ventilation system airflow at system inlet or outlet terminals, grilles or registers for single or multiple branch ventilation duct systems.

The airflow rate measurement apparatus manufacturers shall publish in their product documentation, specifications for how their airflow measurement apparatuses are to be used for accurately measuring residential mechanical ventilation system airflow at system inlet or outlet terminals, grilles or registers of single or multiple branch ventilation systems.

The airflow measurement apparatus manufacturers shall certify to the Energy Commission that use of the apparatus in accordance with the specifications given in the manufacturer's product documentation will produce measurement results that are within the accuracy required by Section NA2.2.2.2.

For the airflow measurement apparatuses that are certified to the Commission as meeting the accuracy required by Section NA2.2.2.2, the following information shall be posted on the Energy Commission website, making the information available to all people involved in the airflow verification compliance process:

(a) The product manufacturers' model numbers for the airflow measurement apparatuses.

(b) The product manufacturers' product documentation that gives the specifications for use of the airflow measurement apparatuses to accurately measure high-rise residential mechanical ventilation system airflow at system inlet or outlet terminals, grilles or registers of single or multiple branch ventilation systems.

A manufacturer's certification to the Commission of the accuracy of the airflow measurement apparatus, and submittal to the Commission of the product documentation that specifies the proper use of the airflow measurement apparatus to produce accurate airflow rate measurements shall be prerequisites for allowing the manufacturer's airflow measurement apparatus to be used for conducting the system airflow verification procedures in Section NA2.2 for demonstrating compliance with Part 6.

NA2.2.3.1 High-Rise Residential Mechanical Exhaust Airflow Measurement Device

A flowmeter designed for measurement of high-rise residential exhaust airflows that meets the applicable instrument accuracy specifications in NA2.2.2.2 may be used to measure the mechanical exhaust ventilation airflow.

NA2.2.3.2 Powered Flow Capture Hood Airflow Measurement Device

A powered and pressure balanced flow capture hood (subsequently referred to as a Powered Flow Hood[1]) that has the capability to balance the flow capture static pressure difference between the room and the flow capture hood enclosure to 0.0 ± 0.2 Pa (0.0008 inches water) and meets the applicable instrumentation specifications in Section NA2.2.2.2 may be used to verify the ventilation airflow rate if the powered flow hood has a flow capture area at least as large as the ventilation system inlet or outlet terminal, register, or grille in all dimensions. The fan adjustment needed to balance the flow capture static pressure difference between the room and the flow capture hood enclosure to 0.0 ± 0.2 Pa (0.0008 inches water) shall be provided by either an automatic control or a manual control operated in accordance with the apparatus manufacturer's instructions specified in the manufacturer's product documentation.

NA2.2.3.3 Traditional Flow Capture Hood

A traditional flow capture hood[2] meeting the applicable instrumentation specifications in Section NA2.2.2.2 may be used to verify the ventilation system airflow rate if the non-powered flow hood has a capture area at least as large as the ventilation system inlet or outlet terminal, register or grille in all dimensions.

NA2.2.4 Procedures

This section describes the procedures used to verify Mechanical ventilation system airflow.

NA2.2.4.1 Mechanical Ventilation Airflow Rate Measurement - Continuous Operation

If multiple fans are specified to operate simultaneously to provide the total required ventilation airflow, the measurements shall be made with all applicable fans operating simultaneously.

NA2.2.4.1.1 Supply and Exhaust Ventilation Systems

a) A flow measuring device that meets the applicable instrumentation requirements specified in Section NA2.2.3.2, and NA2.2.3.3 shall be used to measure the ventilation airflow(s).

b) Measure and record the ventilation airflow(s).

c) If the measured total airflow is greater than or equal to the ventilation airflow rate required by the Standards or the Certificate of Compliance, the mechanical ventilation system complies. Otherwise the mechanical ventilation system does not comply, and corrective action shall be taken.

---

[1] Also known as "active" flow hood, or "fan assisted" flow hood.

[2] Also known as “non-powered flow hood, "standard" flow hood, "commercially available" flow hood, or "passive" flow hood.

NA2.2.4.1.2 Balanced Ventilation Systems

a) A flow measuring device that meets the applicable instrumentation requirements given in Section NA2.2.3.2 and NA2.2.3.3 shall be used to measure the ventilation airflows.

b) Confirm that both the supply side and the exhaust side of the balanced system operate simultaneously in response to a shared system control.

c) Measure the airflow rate for the exhaust side of the system.

d) Measure the airflow rate for the supply side of the system.

e) Calculate the percent difference between the exhaust and supply airflow rates.

f) Calculate the average of the exhaust and the supply airflow rates.

g) If the exhaust and supply airflow rates are within 20% of each other, and the average of the exhaust and supply airflow rates is greater than or equal to the airflow rate required by the Standards or the Certificate of Compliance, the balanced ventilation system complies. Otherwise, the system does not comply, and corrective action shall be taken.

h) If the balanced system is an HRV or ERV and compliance with a recovery efficiency or fan efficacy specification is required, then also perform the verification specified in NA2.2.4.1.5.

NA2.2.4.1.3 Mechanical Ventilation Airflow Rate Measurement - Intermittent Operation

The Executive Director may approve intermittent mechanical ventilation systems, devices, or controls for use for compliance with field verification and diagnostic testing requirements for mechanical ventilation airflow, subject to a manufacturer providing sufficient evidence to the Executive Director that the installed mechanical ventilation systems, devices, or controls will provide at least the minimum ventilation airflow required by the Standards, and subject to consideration of the manufacturer's proposed field verification and diagnostic test protocol for the ventilation system(s). Ventilation airflow of systems with multiple operating modes shall be tested in all modes designed to comply with the required ventilation airflows.

Approved systems, devices, or controls, and field verification and diagnostic test protocols for intermittent mechanical ventilation systems shall be listed in directories published by the Energy Commission.

NA2.2.4.1.4 Kitchen Local Mechanical Exhaust - Vented Range Hood Verification

The verification shall utilize certified performance rating data from the Home Ventilating Institute (HVI) Certified Home Ventilating Products Directory at https://hvi.org/proddirectory/index.com, the Association of Home Appliance Manufacturers (AHAM) Certified Products Directory at https://www.aham.org/AHAM/What_We_Do/Kitchen_Range_Hood_Certification, or another directory of certified product performance ratings approved by the Energy Commission for determining compliance. The verification procedure shall consist of visual inspection of the installed kitchen range hood to verify and record the following information:

a) The manufacturer name and model number.

b) The model is listed in the HVI or AHAM or other approved directory.

c) The rated airflow value or rated capture efficiency value listed in the HVI, AHAM, or other approved directory.

d) The sound rating value listed in the HVI, AHAM, or other approved directory.

e) If the value for the rated airflow or rated capture efficiency given in the directory is greater than or equal to the airflow or capture efficiency requirements specified in the Standards, and if the value for the sone rating given in the directory is less than or equal to the sone rating requirements specified in the Standards, then the kitchen range hood complies. Otherwise, the kitchen range hood does not comply. If the kitchen range hood is not listed in the HVI, AHAM, or other CEC-approved directory, then the system does not comply.

NA2.2.4.1.5 Heat Recovery Ventilation (HRV) or Energy Recovery Ventilation (ERV) Rated Performance Verification

The verification shall utilize certified performance rating data from the Home Ventilating Institute (HVI) Certified Home Ventilating Products Directory at https://hvi.org/proddirectory/index.com, or another directory of certified product performance ratings approved by the Energy Commission for determining compliance. The verification procedure shall consist of visual inspection of the installed system to verify and record the following information:

1. Record the manufacturer make and model from the installed system nameplate.
2. Verify the model is listed in the HVI or other CEC-approved directory.
3. If compliance with a fan efficacy performance rating (w/cfm) is required, then determine and record the fan efficacy rating for the installed model using the model details in the energy ratings in the in the HVI or other CEC-approved directory in accordance with steps a, b, and c below.
    a. Record the required ventilation airflow (cfm) for the installed HRV/ERV as specified on the certificate of compliance.
    b. From the energy ratings in the HVI or other CEC approved directory, determine, and record the rated Power Consumed (Watts) at 32 degrees F, at the closest Net Airflow (cfm) listed in the directory that is greater than or equal to the ventilation airflow (cfm) required on the certificate of compliance. Alternatively, linear interpolation of the directory ratings at 32 degrees F shall be allowed if the interpolated value is calculated based on a Net Airflow (cfm) that is equal to the ventilation airflow (cfm) required on the certificate of compliance. Interpolation shall be in accordance with equation NA2.2-1. Extrapolation of the directory ratings at 32 degrees F shall not be allowed.

Equation NA2.2-1 $$pc = pc1 + [(na - na1) / (na2 - na1)] X (pc2 - pc1)$$

where:

na is the known value for Net Airflow equal to the ventilation airflow required on the certificate of compliance,

pc is the unknown value for Power Consumed (Watts) at 32 degrees F.

na1 and pc1 are the closest rated values at 32F for Net Airflow (cfm) and Power Consumed (Watts) respectively that are below the known na value.

na2 and pc2 are the closest rated values at 32F for Net Airflow (cfm) and Power Consumed (Watts) respectively that are above the known na value.

c. Divide the value for Power Consumed (Watts) recorded in step b, by the Net Airflow (cfm) used in step b to determine the Power Consumed.

4. If compliance with a sensible recovery efficiency (SRE) performance rating (%) is required, then determine and record the SRE rating for the installed model using the model details in the energy ratings in the HVI or other CEC-approved directory in accordance with steps a, and b below.

   a. Record the required ventilation airflow (cfm) for the installed HRV/ERV as specified on the certificate of compliance.

   b. From the energy ratings in the HVI or other CEC approved directory, determine, and record the rated SRE (%) at 32 degrees F, at the closest Net Airflow (cfm) listed in the directory that is greater than or equal to the ventilation airflow (cfm) required on the certificate of compliance. Alternatively, linear interpolation of the directory ratings at 32 degrees F shall be allowed if the interpolated value is calculated based on a Net Airflow (cfm) that is equal to the ventilation airflow (cfm) required on the certificate of compliance. Interpolation shall be in accordance with equation NA2.2-2. Extrapolation of the directory ratings at 32 degrees F shall not be allowed.

   Equation NA2.2-2 $sre = sre1 + [(na – na1) / (na2 – na1)] X (sre2 – sre1)$

   where:

   na is the known value for Net Airflow equal to the ventilation airflow required on the certificate of compliance,

   sre is the unknown value for SRE at 32 degrees F.

   na1 and sre1 are the closest rated values at 32F for Net Airflow (cfm) and SRE respectively that are below the known na value.

   na2 and sre2 are the closest rated values at 32F for Net Airflow (cfm) and SRE respectively that are above the known na value.

5. Determining compliance.
    a. If the value determined for SRE by one or both of the alternatives in step 4 for the installed system is greater than or equal to the SRE required for compliance, then the system complies with the sensible recovery efficiency rating requirement. Otherwise the system does not comply.
    b. If the value determined for fan efficacy (W/cfm) by one or both of the alternatives in step 3 for the installed system is less than or equal to the fan efficacy required for compliance, then the system complies with the fan efficacy rating requirement. Otherwise, the system does not comply.
    c. If compliance with both fan efficacy and sensible recovery efficiency ratings are required, then both ratings shall comply at the same Net Airflow (cfm), otherwise the system does not comply.
    d. If the system is not listed in the HVI or other CEC-approved directory, then the system does not comply.

NA2.3 Field Verification and Diagnostic Testing of -Multifamily Dwelling Unit Enclosures

NA2.3.1 Purpose and Scope

The purpose of this test procedure is to measure the air leakage rate through a dwelling unit enclosure.

The measurement procedure shall be based on the specifications of Residential Energy Services Network's (RESNET) Standard for Testing Airtightness of Building, Dwelling Unit, and Sleeping Unit Enclosures; Airtightness of Heating and Cooling Air Distribution Systems; and Airflow of Mechanical Ventilation Systems (ANSI/RESNET/ICC 380-2019) (RESNET 380) as further specified in Subsections NA2.3.2, NA2.3.3, NA2.3.4 below.

This enclosure leakage procedure is applicable to Multifamily dwelling unit enclosures.

NA2.3.2 Instrument Specifications

The instrumentation for the enclosure leakage measurements shall conform to the specifications in RESNET 380 Section 4.1.

NA2.3.3 Enclosure Leakage Measurement Procedures

The enclosure leakage measurement procedure shall conform to the following specifications:

1) The procedure for preparation of the building or dwelling unit for testing shall conform to the applicable requirements in RESNET 380 Section 4.2.
2) The procedure for installation of the test apparatus, and preparations for measurement shall conform to the applicable requirements in RESNET 380 Section 4.3.

If compliance requires the results of the test to be reported in cubic feet per minute per ft^2 of dwelling unit enclosure surface area at 50 Pa (0.2 inch water) ($CFM50/ft^2$ of enclosure), the dwelling unit enclosure interior surface area in ft^2 (compartmentalization boundary area) shall be recorded.

Note: the compartmentalization boundary area is the sum of the interior surface areas of the dwelling unit enclosure walls between dwelling units, exterior walls, ceiling, and floor.

3) The procedure for the conduct of the enclosure leakage test shall conform to the One-Point Airtightness Test specified in RESNET 380 Section 4.4.1.

NA2.3.4 Determination of Test Results

The results of the test shall be determined as follows:

1) The leakage airflow in CFM50 determined by the One-Point Airtightness Test specified in RESNET 380 Section 4.4.1 shall be adjusted using RESNET 380 Section 4.5.1, equation (5a).
2) If compliance requires the results of the test to be reported in air changes per hour at 50 Pa (0.2 inch water) (ACH50), the leakage results determined by RESNET 380 Section 4.5.1, equation (5a) shall be converted to ACH50 using RESNET 380 Section 4.5.2, equation (7a).
3) If compliance requires the results of the test to be reported in CFM50/ft2 of enclosure, the leakage results determined by RESNET 380 Section 4.5.1, equation (5a) shall be converted to $CFM50/ft^2$ of enclosure using RESNET 380 Section 4.5.2, equation 10.

NA2.3.5 Determining Compliance

If the applicable value(s) for CFM50, ACH50, or $CFM50/ft^2$of dwelling unit enclosure area determined in Section NA2.3.4 are less than or equal to the enclosure leakage compliance criterion specified by the Standards or the Certificate of Compliance, the enclosure complies. Otherwise the enclosure does not comply.

(This page intentionally left blank.)

Nonresidential Appendix NA3

Appendix NA3 – Fan Motor Efficiencies

Table NA3-1 – Fan Motor Efficiencies (< 1 HP)

Nameplate or Brake Horsepower	Standard Fan Motor Efficiency	NEMA* High Efficiency	Premium Efficiency
1/20	40%	...	...
1/12	49%	...	...
1/8	55%	...	...
1/6	60%	...	...
1/4	64%	...	...
1/3	66%	...	...
1/2	70%	76.0%	80.0%
3/4	72%	77.0%	84.0%

NOTE: For default drive efficiencies, see Nonresidential ACM Reference Manual

*NEMA - Proposed standard using test procedures.

Minimum NEMA efficiency as specified by test IEEE 112b Rating Method.

Table NA3-2 – Fan Motor Efficiencies (1 HP and over)

	Open Motors	Open Motors	Open Motors	Open Motors	Enclosed Motors	Enclosed Motors	Enclosed Motors	Enclosed Motors
Motor Horsepower	2 pole 3600 rpm	4 pole 1800 rpm	6 pole 1200 rpm	8 pole 900 rpm	2 pole 3600 rpm	4 pole 1800 rpm	6 pole 1200 rpm	8 pole 900 rpm
1	77.0	85.5	82.5	74.0	77.0	85.5	82.5	74.0
1.5	84.0	86.5	86.5	75.5	84.0	86.5	87.5	77.0
2	85.5	86.5	87.5	85.5	85.5	86.5	88.5	82.5
3	85.5	89.5	88.5	86.5	86.5	89.5	89.5	84.0
5	86.5	89.5	89.5	87.5	88.5	89.5	89.5	85.5
7.5	88.5	91.0	90.2	88.5	89.5	91.7	91.0	85.5
10	89.5	91.7	91.7	89.5	90.2	91.7	91.0	88.5
15	90.2	93.0	91.7	89.5	91.0	92.4	91.7	88.5
20	91.0	93.0	92.4	90.2	91.0	93.0	91.7	89.5
25	91.7	93.6	93.0	90.2	91.7	93.6	93.0	89.5
30	91.7	94.1	93.6	91.0	91.7	93.6	93.0	91.0
40	92.4	94.1	94.1	91.0	92.4	94.1	94.1	91.0
50	93.0	94.5	94.1	91.7	93.0	94.5	94.1	91.7
60	93.6	95.0	94.5	92.4	93.6	95.0	94.5	91.7
75	93.6	95.0	94.5	93.6	93.6	95.4	94.5	93.0
100	93.6	95.4	95.0	93.6	94.1	95.4	95.0	93.0
125	94.1	95.4	95.0	93.6	95.0	95.4	95.0	93.6
150	94.1	95.8	95.4	93.6	95.0	95.8	95.8	93.6
200	95.0	95.8	95.4	93.6	95.4	96.2	95.8	94.1
250	95.0	95.8	95.4	94.5	95.8	96.2	95.8	94.5
300	95.4	95.8	95.4		95.8	96.2	95.8	
350	95.4	95.8	95.4		95.8	96.2	95.8	—
400	95.8	95.8	95.8		95.8	96.2	95.8	
450	95.8	96.2	96.2		95.8	96.2	95.8	
500	95.8	96.2	96.2		95.8	96.2	95.8	

Nonresidential Appendix NA4

Appendix NA4 – Compliance Procedures for Relocatable Public School Buildings

NA4.1 Purpose and Scope

This document describes the compliance procedures that shall be followed when the whole building performance approach is used for relocatable public school buildings. Relocatable public school buildings are constructed (manufactured) at a central location and could be shipped and installed in any California climate zone. Furthermore, once they arrive at the school site, they could be positioned so that the windows face in any direction. The portable nature of relocatable classrooms requires that a special procedure be followed for showing compliance when the whole building performance method is used. Compliance documentation for relocatable public school buildings will be reviewed by the Division of the State Architect (DSA).

NA4.2 The Plan Check Process

The Division of the State Architect is the enforcement agency for relocatable public school buildings. Since relocatables are manufactured in batches, like cars or other manufactured products, the plan check and approval process occurs in two phases. The first phase is when the relocatable manufacturer completes design of a model or modifies a model. At this point, complete plans and specifications are submitted to the DSA; DSA reviews the plans for compliance with the energy standards and other California Building Code (CBC) requirements; and a “pre-check” (PC) design approval is granted. Once the PC design is approved, a school district or the manufacturer may file an “over-the-counter” application with DSA to construct one or more relocatables. The over-the-counter application is intended to be reviewed quickly, since the PC design has already been pre-checked. The over-the-counter application is the building permit application for construction and installation of a relocatable at a specific site, and includes the approved PC design drawings as well as site development plans for the proposed site where the relocatable will be installed. An over-the-counter application also is required for the construction of a stockpile of one or more relocatables based on the approved PC design drawings. Stockpiled relocatables are stored typically at the manufacturer’s yard until the actual school site is determined where the relocatable will be installed. Another over-the-counter application is required to install a previously stockpiled relocatable at which time site development plans for the proposed site are checked.

The effective date for all buildings subject to the energy standards is the date of permit application. If a building permit application is submitted on or after the effective date, then the new energy standards apply. For relocatable classrooms, the date of the permit application is the date of the over-the-counter application, not the date of the application for PC design approval. The PC design is only valid until the code changes.

NA4.3 The Compliance Process

Like other nonresidential buildings, the standard design for relocatable public school buildings is defined by the prescriptive requirements. In the case of relocatables, there are two choices of prescriptive criteria:

(a) Table 140.3-D in the Standards may be used for relocatable school buildings that can be installed in any climate zone in the state. In this case, the compliance is demonstrated in climates 14, 15, and 16 and this is accepted as evidence that the classroom will comply in all climate zones. These relocatables will have a permanent label that allows it to be used anywhere in the state as specified in Section 140.3(a)8 of the Standards.

(b) Table 140.3-B in the Standards may be used for relocatable school buildings that are to be installed in only specific climate zones. In this case, compliance is demonstrated in each climate zone for which the relocatable has been designed to comply. These relocatables will have a permanent label that identifies in which climate zones it may be installed as specified in Section 140.3(a)8 in the Standards. It is not lawful to install the relocatable in other climate zones.

The building envelope of the standard design has the same geometry as the proposed design, including window area and position of windows on the exterior walls, and meets the prescriptive requirements specified in Section 140.3. Lighting power for the standard design meets the prescriptive requirements specified in Section 140.6. The HVAC system for the standard design meets the prescriptive requirements specified in Section 140.4. The system typically installed in relocatables is a single-zone packaged heat pump or furnace. Most relocatable school buildings do not have water heating systems, so this component is neutral in the analysis. Other modeling assumptions such as equipment loads are the same for both the proposed design and the standard design and are specified in the Nonresidential ACM Reference Manual.

Manufacturers shall certify compliance with the standards and all compliance documentation shall be provided. If the manufacturer chooses to comply using Table 140.3-B in the Standards for compliance in only specific climate zones, then the manufacturers shall indicate the climates zones for which the classroom will be allowed to be located as specified in Section 140.3(a)8 of the Standards.

Since relocatable public school buildings could be positioned in any orientation, it is necessary to perform compliance calculations for multiple orientations. Each model with the same proposed design energy features shall be rotated through 8 different orientations either in climate zones 14, 15 and 16 for relocatables showing statewide compliance or in the specific climate zones that the manufacturer proposes for the relocatable to be allowed to be installed, i.e., the building with the same proposed design energy features is rotated in 45 degree increments and shall comply in each case. Approved compliance programs shall automate the rotation of the building and reporting of the compliance results to insure it is done correctly and uniformly and to avoid unnecessary documentation.

NA4.4 Documentation

The program shall present the results of the compliance calculations in a format similar to Table NA4-4. For each of the cases (8orientations times number of climates), the Time Dependent Valuation (TDV) energy for the *Standard Design* and the *Proposed Design* are shown (the energy features of the *Proposed Design* shall be the same for all orientations). The final column shows the compliance margin, which is the difference between the TDV energy for the *Proposed Design* and the *Standard Design*. Approved compliance programs shall scan the data presented in the Table NA4-4 format and prominently highlight the case that has the smallest compliance margin. Complete compliance documentation shall be submitted for the building and energy features that achieve compliance in all of the climate zones and orientations as represented by the case with the smallest margin. DSA may require that compliance documentation for other cases also be submitted; showing that the *Proposed Design* building and energy features are identical to the case submitted, in each orientation and climate zone. Table NA4-4 shows rows for climate zones 14, 15, and 16, which are the ones used when the criteria of Table 140.3-D in the Standards is used to show compliance throughout the state. If the criteria of Table 140.3-B in the Standards is used, then rows shall be added to the table for each climate zone for which the manufacturer wants the relocatable to be allowed to be installed.

Table NA4-1 – Summary of Compliance Calculations Needed for Relocatable Classrooms

			TDV Energy	
Climate Zone	Azimuth	Proposed Design	Standard Design	Compliance Margin
14	30			
	75			
	120			
	165			
	210			
	255			
	300			
	345			
15	30			
	75			
	120			
	165			
	210			
	255			
	300			
	345			
16	30			
	75			
	120			
	165			
	210			
	255			
	300			
	345			

NA4.5 Optional Features

Relocatable classrooms may come with a variety of optional features, like cars. A school district can buy the “basic model” or it can pay for options. Many of the optional features do not affect energy efficiency and are not significant from the perspective of energy code compliance. Examples include floor finishes (various grades of carpet or tiles), casework, and ceiling and wall finishes. Other optional features do affect energy performance such as window construction, insulation, lighting systems, lighting controls, HVAC ductwork, HVAC equipment, and HVAC controls.

When a manufacturer offers a relocatable classroom model with a variety of options, it is necessary to identify those options that affect energy performance and to show that the model complies with any combination of the optional features. Most of the time, optional energy

features are upgrades that clearly improve performance. If the basic model complies with the Standards, then adding any or all of the optional features would improve performance. The following are examples of optional features that are clear upgrades in terms of energy performance:

(a) HVAC equipment that has both a higher SEER and higher EER than the equipment in the basic model.

(b) Lighting systems that result in less power than the basic model.

(c) Lighting controls, such as occupant sensors, that are recognized by the standards and for which power adjustment factors in Table 140.6-A are published in Section 140.6.

(d) Windows that have both a lower SHGC and lower U-factor (limited to relocatables that do not take credit for daylighting).

(e) Wall, roof or floor construction options that result in a lower U-factor than the basic model.

For energy code compliance purposes, it is necessary to show that every variation of the relocatable classroom that is offered to customers will comply with the Standards. There are two approaches for achieving this, as defined below:

1. **Basic Model Plus Energy Upgrades Approach.** The simplest approach is to show that the basic model complies with the Standards and that all of the options that are offered to customers are clear energy upgrades that would only improve performance. As long as each and every measure in the basic model is met or exceeded by the energy upgrades, the relocatable classroom will comply with the Standards.

   While clear upgrades are obvious in most cases, the following are some examples of options that are not energy upgrades, for which additional analysis would be needed to show compliance that every combination of options comply.

   (a) HVAC equipment that has a higher SEER, but a lower EER.

   (b) Windows that lower SHGC but increase U-factor, or vice versa.

   (c) Insulation options that reduce the U-factor for say walls, but increase it for the roof.

   (d) Any other combination of measures that results in the performance of anyone measure being reduced in comparison to a complying basic model.

2. **Modeling of Every Combination Approach.** A more complex whole building performance approach is required when a model is available with options which in combination may or may not comply. In this case every combination of options shall be modeled, and the specific combinations that comply shall be determined and only those combinations shall be allowed. This approach, while possible, requires considerably more effort on the part of the relocatable manufacturer and its energy consultant. It also places a greater burden on DSA when they issue the over-the-counter building permit for the PC design that only allows specific combinations of energy options. DSA would have to examine the specific optional features that are proposed with the over-the-counter application and make sure that the proposed combination of measures achieves compliance.

The manufacturer or its energy consultant would need to prepare a table or chart that shows all of the acceptable combinations that achieve compliance. This chart could be quite complex, depending on the number of optional features that are offered.

Table NA4-5 is intended to illustrate the complexity that could be involved in modeling of every combination of energy features. It shows a list of typical optional features that would affect energy performance. In this example, there are two possible for each of the eight options, e.g. the feature is either there or not (in an actual case there could be a different number of options and a different number of states for any option). In the example any one of the features could be combined with any of the others. The number of possible combinations in this example is two (the number of states) to the eighth power (the number of measures that have two states). The number of possible options is then 2^8 or 256. This is the number of combinations that would need to be modeled in order to determine which combination of optional features achieves compliance.

Table NA4-2 – Examples of Optional Features for Relocatable Classrooms

	Options Offered	States	
1	Efficient lighting option	Yes/No	
2	High efficiency heat pump	Yes/No	
3	Improved wall insulation	Yes/No	
4	Improved roof insulation	Yes/No	
5	Occupant sensor for lighting	Yes/No	
6	Low-e windows	Yes/No	
7	Skylights	Yes/No	
8	Daylighting Controls	Yes/No	

Nonresidential Appendix NA5

Appendix NA5 – Field Verification and Diagnostic Testing of Whole Building Air Leakage

NA5.1 Purpose and Scope

The purpose of this test procedure is to measure the air leakage rate through a building envelope.

1. This enclosure leakage procedure is applicable to nonresidential buildings.
    a. Buildings that have less than 10,000 ft^2 of conditioned floor area may perform the whole-building air leakage test in accordance with Residential Energy Services Network (RESNET)/ANSI/ICC3 380-2019 Guidelines and RA3.8[rather than those in NA5.2-7.
    b. Buildings that have more than 50,000 ft^2 of conditioned floor area, a sectional test method of co-pressurizing representative test floors and taking data from the specific floors is permitted when following the procedures in Sections NA5.2-7. Representative test floors must meet the following conditions as adopted from ASHRAE 90.1-2019 Exceptions to 5.4.3.1.1:
        i. The entire floor area of all stories that have any spaces directly under a roof.
        ii. The entire floor area of all stories that have a building entrance or loading dock.
        iii. Representative above-grade wall sections of the building totaling at least 25% of the wall area enclosing the remaining conditioned space. Floor areas in parts a) and b) shall not be included in the 25%.
        iv. When interpreting the data and determining the final air leakage rate, the measured air leakage is area-weighted by the surface areas of the building envelope.
2. The measurement procedure shall be based on the specifications of ASTM E3158 by blower door fan assembly (architectural only) and multi-point regression testing as further specified in Sections NA5.2, NA5.3, NA5.4. NA5.5, NA5.6, NA5.7 below.

NA5.2 Instrument Specifications

The instrumentation for the enclosure leakage measurements shall conform to the specifications in ASTM E3158.

NA5.3 Pre-Test

NA5.3.1 Pre-Test Inspection (to occur the day before testing day)

1. Visually review the building for completion of air barrier components.
2. Meet with electrical and mechanical (or controls) subcontractors to review electrical needs for testing equipment and shutdown/sealing plan for mechanical systems and ductwork.
3. Contractor to provide dedicated electrical service for running of fans during the air leakage testing (minimum of 1 non-GFCI circuit 120V/20A per fan required).
4. Review weather forecasts and verify appropriate test conditions.

NA5.3.2 Pre-Test Set Up (To be performed by General Contractor)

1. Seal all intentional penetrations where they penetrate the air barrier (i.e. louvers, vents, etc.).
2. Fill plumbing traps with water. Toilets, sinks, floor drains, waterless urinals must be primed. Airtight caps on drains are acceptable.
3. Shut off the HVAC system – or leave in “pilot” mode (to avoid introducing air movement that is not included in the calculations). Any automated pressure relief dampers must either be disabled, sealed or set to a pressure well above 75 Pa.
4. Disable combustion equipment or leave in “pilot” position.
5. Seal all intentional openings in building envelope so that they are air-tight. Acceptable sealing materials include but are not limited to carpet protection plastic, adhesive grill mask and tape and plastic (4 mil poly sheeting or thicker). Intentional openings include, but are not limited to, the following:
    a. Supply air intakes
    b. Make-up air and other intakes/louvers
    c. Exhaust ducts/vents/louvers
    d. Plumbing exhausts
    e. Pressure relief dampers or louvers
    f. Fume hoods
    g. Other exhaust vents (kitchen, bathroom, dryer, etc.)

h. Any other locations where air leakage can occur within the mechanical system during inactive periods

i. Any other intentional opening in the building envelope other than doors and operable windows

6. Close and lock exterior windows and doors. Close any vents within window frames.
7. Prop interior doors open to create a single uniform zone.
8. Where drop ceilings are installed in a location that constitutes a barrier to air flow between the testing equipment and the plane of air tightness of the space being tested, remove ceiling tiles at a rate of one per 500 ft2 to prevent movement of tiles during test and to ensure a uniform pressure within plenum space. Additional tiles can be removed to ensure a uniform pressure distribution in the plenum space.
9. Install exterior electrical box caps (if applicable).

NA5.4 Run Preliminary Test

Pressurize the building to 75 Pa to approximate if building is expected to pass test and to confirm that pre-test set up is complete and that temporary sealing stays in place while under pressure.

NA5.5 Enclosure Measurement Procedures

NA5.5.1 Pressurization Test

1. Reference ASTM E3158-18 for Whole Building Air Leakage Testing.
2. Record interior and exterior weather conditions.
3. Record average wind speeds.
4. Record interior and exterior temperatures before the testing begins.
5. Record site elevation in feet above sea level.
6. Measure bias pressures with fans off and covered.
7. Perform a multi-point pressurization test from at least +25 to +50 Pa (leakage is reported at 75 Pa, as attained or extrapolated).
8. Record a minimum of 5 points between minimum and maximum induced pressures.
9. Measure bias pressures at end of multi-point test with fans off and covered.
10. Record interior and exterior temperatures.
11. If the pressure exponent n is less than 0.45 or greater than 1.0 per Section 9.5.1 of ASTM E3158-18, then the pressurization test is invalid and shall be repeated.

NA5.5.2 Depressurization Test

1. Reverse direction of fans.
2. Measure bias pressures with fans off and covered.
3. Perform a multi-point depressurization test from at least -25 to -50 Pa (optional).
4. Record a minimum of 5 points between minimum and maximum induced pressures.
5. Measure bias pressures at end of multi-point test with fans off and covered.
6. Record interior and exterior temperatures after the testing is complete.
7. If the pressure exponent n is less than 0.45 or greater than 1.0 per Section 9.5.1 of ASTM 3158-18, then the depressurization test is invalid and shall be repeated.

NA5.6 Determination of Test Results

1. Calculate the building envelope air leakage in accordance with guidelines in ASTM E3158-18 multi-point regression tests or the relevant building envelope area when testing in sections.
2. If the building envelope air leakage rate exceeds 0.4 cfm/ft^2 but is less than 0.6 cfm/ft^2, a visual inspection of the air barrier shall be conducted in accordance with NA5.7. Any leaks observed should be sealed where such sealing can be made without destruction of existing building components. An additional report identifying the corrective actions taken to seal air leaks should be submitted to the building owner and code official, and any further requirement to meet the air leakage rate will be waived.
3. If the building envelope air leakage rate exceeds 0.6 cfm/ft^2, a visual inspection of the air barrier shall be conducted in accordance with NA 5.7, and any leaks noted should be repaired. The building will then be re-tested until either the building envelope air leakage rate less than 0.4 cfm/ft^2, or the building envelope air leakage rate is in the range of 0.4 cfm/ft^2 but is less than 0.6 cfm/ft^2 and a visual inspection and repair program is executed.

Exception to NA5.6 3. Alterations where less than 100% of the wall area is being altered or additions that are an extension of the existing air barrier, if the building is tested in accordance with the procedures for whole building air leakage in NA5 and the tested leakage rate exceeds 0.6 cfm/ft^2 of building shell area at 75 pa, a Visual Inspection and Diagnostic Evaluation shall been completed in accordance with NA5.7 and all observed leaks shall be sealed where such sealing can be made without destruction of existing building components. An additional report identifying the corrective actions taken to seal air leaks should be submitted to the building owner and code official, and any further requirement to meet the air leakage rate will be waived.

NA5.7 Visual Inspection and Diagnostic Evaluation of Air Leakage After Test Failure Visual Inspection

1. Ensure that all temporary seals and covers for intentional openings such as at louvers, exhaust/intake vents, fireplaces, and rooftop units are properly sealed and not damaged or loosened during the construction.
2. Ensure that all plumbing-traps are filled with water.
3. Ensure that all operable windows, trickle-vents, and doors are properly shut and locked.
4. Ensure that all mechanical systems are shut-off and any mechanical dampers set to the closed position.

Diagnostic Evaluation

5. Identify locations with air leakage using infrared thermography or smoke pens in accordance with ASTM E1186-17, while the building is maintained at a minimum 25 Pa pressure (during pressurization) or –25 Pa (during depressurization). The following locations shall be evaluated:
    a. The perimeter of windows and doors.
    b. Around operable window hardware and door hardware
    c. Penetrations through the roof, wall, and floor assemblies along the plane of the intended air-barrier.
    d. Electrical outlets located on exterior-facing walls.
    e. Lighting and other electrical penetrations through the roof level ceiling.
    f. Above- and below-grade vestibules.
    g. Stairs leading to unconditioned space.

NA5.8 Reporting

1. Generate report in accordance with ASTM E3158 reporting instructions.
2. The report shall include information on the tested building envelope area, conditioned floor area, conditioned air-by-volume, stories above grade, and air leakage rates.
3. Results shall be reported at the upper 95 percent confidence interval.

NA5.9 Verification of Continuous Air Barrier

An independent third-party verification shall be conducted in accordance with the following requirements:

1. A design review shall be conducted to verify and document compliance with the requirements Section 140.3(a)9, specifically:
    a. All air barrier components are identified on construction documents

b. All joints, interconnections, and penetrations of the continuous air barrier components are identified on construction documents

c. The continuous air barrier extends on all surfaces of the building envelope (walls, roof, and lowest floor)

d. The continuous air barrier is designed to resist positive and negative pressures from wind, stack effect, and mechanical ventilation.

e. The compliance documents indicate the intent to verify the continuous air barrier by way of on-site visual inspection.

2. Inspection shall occur during construction when the continuous air barrier is accessible for a visual inspection. The entire continuous air barrier shall be inspected. The third-party entity conducting the verification shall coordinate with the construction team to schedule site visits such that the entire continuous air barrier is verified.

3. Inspection of the continuous air barrier materials and assemblies shall verify the following are installed correctly:

   a. Transitions to adjacent air barrier systems – including but not limited to roof parapet transitions, glazed framing systems to adjacent framed wall assemblies transitions, plaza waterproofing to podium transitions, vertical wall to soffit transitions

   b. Detailing of penetrations through air barrier systems.

   c. Building assemblies used as ducts or plenums

   d. Contractor internal quality control/quality assurance

Nonresidential Appendix NA6

Appendix NA6 – Alternate Default Fenestration Procedure to Calculate Thermal Performance

NA6.1 Scope

This procedure provides for non-rated site-built skylights, and alterations to fenestration (i.e., repairs or replacement of glass), with an option to comply with the Energy Standards. The Center of Glass (COG) values are required to be used in Equation NA6-1, NA6-2 and NA6-3 and shall be determined by the manufacturers in accordance with NFRC procedures. A copy of the manufacturer cut sheets or data sheet shall be provided identifying the COG values as an attachment with the Fenestration Certificate of Compliance.

(a) NONRESIDENTIAL AND MULTIFAMILY BUILDINGS FOUR STORIES OR GREATER

For Nonresidential cases, the Alternative Default Fenestration Procedure option is available for up to 200 ft^2 of site-built skylight area, and alterations to vertical fenestration. The manufacturer cut sheet or data sheet shall be used to identify the COG values for the U-factor, Solar Heat Gain Coefficient ($SHGC_C$) and Visible Transmittance (VT_C). If unable to determine center of glass information, the alternative Energy Commissions Default Tables in Section 110.6 of the Energy Standards must be used to determine the appropriate fenestration default values. The values listed in Table 110.6-A for U-factors and Table 110.6-B for SHGC values are whole fenestration product values. Since there is no default Visible Transmittance value available, the alternative is VT_C =1.0; this will be used to determine the total fenestration product, VT_T, which includes the glass and frame of the fenestration.

For Nonresidential, the altered fenestration (other than a repair) shall meet the values listed in Table 141.0-A unless the altered glass area meets the Exception to Section 141.0(b)2A in the Energy Standards. If the altered fenestration or glass alone is not rated by NFRC then the Alternate Default Fenestration Procedure can be used.

(b) RESIDENTIAL AND MULTIFAMILY BUILDINGS THREE STORIES OR LESS

For Residential cases, the Alternate Default Fenestration Procedure option is available only when nonrated site-built fenestration is being installed in a residential dwelling. For Residential site-built fenestration up to 250 ft^2 in area or 5% times the conditioned floor area (CFA), whichever is greater shall meet Sections §110.6(a)2 and §110.6(a)3.

The Alternate Default Fenestration calculated values are typically less efficient than those listed in the Prescriptive Approach in Table 150.1-A and Table 150.1-B of the Energy Standards. The Visible Transmittance (VT) value is not required to meet residential energy compliance. If unable to acquire center of glass (COG) thermal performance values from the manufacturer, then the Energy Commissions Default Tables shall be used; Table

110.6-A for U-factors and Table 110.6-B for SHGC values and documented on the on a self-produced manufactured default label. The default label shall be attached to the unrated fenestration product. -An example of the label can be found in the Residential Compliance Manual.

(c) DOCUMENTATION

1. The Energy Commission's Fenestration Label Certificate form for nonresidential application shall be used to document the Alternate Default Fenestration calculated values for each non-rated site-built fenestration unit; or
2. For residential, a manufactured Default Label attached to each non-rated site-built fenestration unit.

The equations listed below are to be used for only for unrated site-built fenestration that meets the requirements in either item 1 or 2 above.

NA6.2 Default U-factor

Equation NA6-1

$$U_T = C_1 + (C_2 \text{ X } U_c)$$

Where:

U_T = U-factor Is the Total Performance of the fenestration including glass and frame

C_1 = Coefficient selected from Table NA6-6

C_2 = Coefficient selected from Table NA6-6

U_C = Center of glass U-factor calculated in accordance with NFRC 100 Section 4.5.3.1 (http://www.nfrc.org/software.aspx)

Table NA6-6 – U-factor Coefficients

Product Type	Frame Type	C_1	C_2
Site-Built Vertical Fenestration	Metal	0.311	0.872
Site-Built Vertical Fenestration	Metal Thermal Break	0.202	0.867
Site-Built Vertical Fenestration	Non-Metal	0.202	0.867
Skylights with a Curb	Metal	0.711	1.065
Skylights with a Curb	Metal Thermal Break	0.437	1.229
Skylights with a Curb	Non-Metal	0.437	1.229
Skylights with no Curb (Deck Mounted)	Metal	0.310	0.878
Skylights with no Curb (Deck Mounted)	Metal Thermal Break	0.195	0.882
Skylights with no Curb (Deck Mounted)	Non-Metal	0.310	0.878

NA6.3 Default Solar Heat Gain Coefficient, SHGC

The SHGC of the fenestration product shall be calculated using the following equation:

Equation NA6-2

$$SHGC_T = 0.08 + (0.86 \times SHGC_c)$$

Where:

$SHGC_T$ = SHGC Is the Total Performance of the fenestration including glass and frame

$SHGC_C$ = Center of glass SHGC calculated in accordance with NFRC 200 Section 4.5.1.1 http://www.nfrc.org/software.aspx

NA6.4 Default Visible Transmittance, VT

Equation NA6-3 - VT of Center of Glass (COG) calculation

$$VT_T = VT_F \times VT_C$$

Where:

VT_T = Is the Total Performance of the fenestration including glass and frame

VT_F = 0.53 for projecting windows, such as casement and awning windows

VT_F = 0.67 for operable or sliding windows

VT_F = 0.77 for fixed or non-operable windows

VT_F= 0.88 for curtain wall/storefront, Site-built and manufactured non-curb mounted skylights

VT_F = 1.0 for Curb Mounted manufactured Skylights

VT_C = Center of glass VT is calculated in accordance with NFRC 200 Section 4.5.1.1 or NFRC 202 for Translucent Products or NFRC 203 for Tubular Daylighting Devices and Hybrid Tubular Daylighting Devices or ASTM E972 (http://www.nfrc.org/software.aspx)

NA6.5 Responsibilities for Compliance

This section describes the responsibilities of energy consultants, designers, architects, builders, installers, and enforcement agencies when using the procedures of this appendix.

NA6.5.1 Energy Consultants, Designers, Architects

The person with responsibility for preparing the compliance documentation shall establish the inputs from the following:

(a) The center of glass U-factor, SHGC and VT shall be taken from manufacturers' literature and determined using methods consistent with NFRC 100, NFRC 200, NFRC 202 and NFRC 203 procedures.

(b) The frame type (Metal, Metal Thermal Break, Non-metal) shall be verified from manufacturers' literature and through observations of frame sections provided by the manufacturer.

For the Prescriptive Overall Compliance Method, the calculated values shall be entered on the prescriptive Certificate of Compliance form. In addition the Fenestration Certificate of Compliance Label Certificate must be also filled and located at the project site location in according to Reference Nonresidential Appendix NA7.

For the Performance Compliance Approach, the calculated values shall be entered and documented on the Performance Certificates of Compliance. In addition the Fenestration Certificate of Compliance Label Certificate must be filled and located at the project site location in according to Reference Nonresidential Appendix NA7.

For both the prescriptive and performance compliance method, the building plans shall contain a window schedule that lists the calculated values in which matches the Fenestration Certificate of Compliance form or improved thermal performance values than listed on the Fenestration Certificate of Compliance form. The specifications of the windows shall be consistent with the values used in this procedure, e.g. frame type glazing product, etc.

Permit applications must include fenestration U-factor, SHGC and VT values documentation for the building plan checker. This documentation must include a copy of the manufacturer's documentation showing the Glazing Type information (center of glass U-factor, center of glass SHGC, center of glass VT, number of panes, coatings and the frame type (frame material type, presence of thermal breaks, and identification of structural glazing (glazing with no frame)) that is used to determine U_T, $SHGC_T$, and VT_T. If the proposed design uses multiple fenestration products, manufacturer's documentation for each fenestration product shall be attached to the plans. Manufacturer's documentation must be provided for each unique combination of glazing and frame used for compliance and shall be located at the project's location.

If mixed fenestration is included in the compliance analysis, then the compliance submittal must clearly identify which are certified fenestration products, and which are non-certified fenestration products. In nonresidential buildings, non-certified fenestration products are limited to 200 ft^2 of skylight area and altered vertical fenestration. In residential buildings, non-certified fenestration products are limited to 250 ft^2 in area, or 0.5% of the CFA, whichever is greater.

The manufacturer's documentation and calculations for each product must be included in the submittal, and either the Prescriptive Certificate of Compliance or Performance Certificate of Compliance form must be included on the building plans. All non-certified fenestration products, including skylights, require a completed Fenestration Certificate of Compliance.

NA6.5.2 Builder and Installer Responsibilities

The builder must ensure that the fenestration (glass and frame) documentation showing the U factor, SHGC, and VT used for determining compliance is provided to the installer. The builder is responsible for ensuring that the persons preparing compliance documentation are specifying products the builder intends to install. The builder is responsible for ensuring that the installer installs glass with thermal performance equal to or better than the thermal performance used for energy compliance and that the frame type installed is the same as that used for compliance. The builder also must ensure that the field inspector for the enforcement agency is provided with manufacturer's documentation attached to each Energy Commission's Fenestration Certificate of Compliance Label Certificate showing the thermal performance and method of determining thermal performance for the actual fenestration products installed. The builder should verify that these fenestration products are clearly shown on the building plans before fenestration products are purchased and installed. A copy of the manufacturer's documentation and Fenestration Certificate of Compliance shall be located at the project location.

NA6.5.3 Enforcement Agency Responsibilities

NA6.5.3.1 Plan Checker

The enforcement agency plan checker or reviewer is responsible for ensuring that the plans identify all site-built fenestration and skylights occasionally residential site-built fenestration will be used and also identified on the Fenestration Certificate of Compliance form. The plan checker shall ensure that site-built fenestration and skylights using the alternate default procedure shall meet the following:

(a) Confirm that U-factors, SHGC and VT (for Commercial use only) values are clearly shown on the window schedules on the plans and documented on the energy compliance forms, and

(b) Confirm that manufacturer documentation of the Glazing Type and Frame Type has been provided for the each of the fenestration products using the procedure of this appendix and documents the Center of Glass values; and

(c) Verify the building meets the non-certified fenestration requirement (Nonresidential: up to 200 ft^2 of skylight area, or an altered vertical fenestration; Residential: up to 250 ft^2 in area, or 0.5% of the CFA, whichever is greater); and

(d) For Nonresidential, confirm that a Fenestration Certificate of Compliance Label Certificate has been completed for each non-rated site-built fenestration product, or for Residential, verify that the non-rated site-built fenestration efficiencies match the building plans and energy compliance forms.

NA6.5.3.2 Enforcement Agency Inspector

(a) For Residential up to 250 ft^2 in area or 0.5% of the CFA, whichever is greater, of non-rated site-built fenestration is allowed. The inspector should verify the manufacturer's label attached to each residential site-built fenestration product to ensure that it matches with residential energy compliance forms.

(b) For Nonresidential up to 200 ft^2 of skylight area and altered vertical site-built fenestration are allowed for this alternative procedure. The field inspector is responsible for ensuring that the U-factor, SHGC and VT for the installed fenestration match the building plans and energy compliance forms. Inspection of the Commission's Fenestration Certificate of Compliance Label Certificate shall match each of the Prescriptive Certificate of Compliance form or the Performance Certificate of Compliance forms for the installed site-built fenestration product.

Nonresidential Appendix NA7

Appendix NA7 – Installation and Acceptance Requirements for Nonresidential Buildings and Covered Processes

NA7.1 Purpose and Scope

This appendix defines acceptance procedures that must be completed on certain controls and equipment before the installation is deemed to be in compliance with the Standards. These requirements apply to all newly installed equipment for which there are acceptance requirements in new and existing buildings. The procedures apply to nonresidential, high-rise residential, hotel/motel buildings and covered processes as defined by the California Energy Commission's Energy Efficiency Standards for Nonresidential Buildings (Standards). The purpose of the acceptance tests is to assure:

(a) The presence of equipment or building components according to the specifications in the compliance documents.

(b) Installation quality and proper functioning of the controls and equipment to meet the intent of the design and the Standards.

Modifications and additions to these acceptance requirements needed to improve clarity or to better ensure proper installation and functionality may be approved by the Energy Commission.

NA7.2 Introduction

Acceptance requirements are defined as implementation of targeted inspection checks and functional and performance testing to determine whether specific building components, equipment, systems, and interfaces between systems conform to the criteria set forth in the Standards and to related construction documents (plans or specifications). Acceptance requirements improve code compliance effectiveness and help meet the expected level of performance.

Acceptance testing is not intended to take the place of commissioning or test and balance procedures that a building owner might incorporate into a building project. It is an adjunct process focusing only on demonstrating compliance with the Standards.

Third-party review of the information provided on Certificate of Acceptance documentation is not required, with one exception: duct leakage diagnostic test results for some constant volume space conditioning systems serving less than 5,000 square feet of conditioned floor area are required to be verified by a certified HERS Rater as specified in Standards Section 120.4(g).

NA7.3 Roles and Responsibilities

Individuals who perform the field testing and verification work, and provide the information required for completion of the Certificate of Acceptance documentation are not required to be licensed professionals. The person who signs the Certificate of Acceptance document to certify compliance with the acceptance requirements shall be licensed as specified in Standards Section 10-103(a)4.

NA7.3.1 Responsible Person

The Certificate of Acceptance shall be signed by the person who is in charge of the acceptance testing for the scope of work identified on the Certificate of Acceptance. The *Responsible Person* shall be a licensed professional who is eligible under Division 3 of the Business and Professions code in the applicable classification, to take responsibility for the aspects of the system design, construction, or installation applicable to the scope of work identified on the Certificate of Acceptance. The *Responsible Person* shall review the information on the Certificate of Acceptance document and sign the document to certify compliance with the acceptance requirements. The *Responsible Person* shall assume responsibility for the acceptance testing work performed by the *Field Technician* agent(s) or employee(s), and if necessary shall interview the person who performed the acceptance test work in order to ascertain whether the testing work reported on the Certificate of Acceptance was completed as reported and is consistent with the *Responsible Person's* expectation. The *Responsible Person* may also perform the required acceptance testing work, and in that case shall also sign as the *Field Technician* on the Certificate of Acceptance document.

NA7.3.2 Field Technician

The *Field Technician* is responsible for performing the acceptance test procedures and documenting the results on the Certificate of Acceptance document. The *Field Technician* shall sign the Certificate of Acceptance to certify that the information provided on the Certificate of Acceptance is true and correct. Field Technicians shall be certified Acceptance Test Technicians (ATT) when required by Sections 10-103.1 or 10-103.2.

NA7.3.3 Documentation Author

Documentation Authors who provide administrative support for document preparation for Certificate of Acceptance documentation shall sign a declaration statement on the documents they prepare to certify the information provided on the documentation is accurate and complete.

NA7.3.4 Enforcement Agency

The Certificate of Acceptance shall be submitted to the enforcement agency in order to receive the final Certificate of Occupancy. The enforcement agency shall have the authority to require the *Responsible Person* and *Field Technician* to demonstrate competence, to its satisfaction.

NA7.4 Building Envelope Acceptance Tests

NA7.4.1 Fenestration

Each fenestration product shall provide an NFRC Label Certificate or the Commission's Fenestration Certificate to identify the thermal performance (e.g. U-factor, SHGC, and VT) of each fenestration product being installed. The labels shall be located at the job site for verification by the enforcement agency. In addition, the responsible party shall fill out the Fenestration Acceptance Certificate. The responsible party shall verify the thermal performance of each specified fenestration product being installed matches the label certificate, energy compliance documentation and building plans. A copy of the certificate shall be given to the building owner and the enforcement agency for their records.

NA7.4.1.1 Elements Requiring Verification:

The responsible party shall verify the following:

(a) The thermal performance for each fenestration product matches the building plans, energy compliance documentation, and the label certificate; and

(b) The delivery receipt or purchase order matches the delivered fenestration product(s); and

(c) Verify the NFRC Label Certificate is filled out and includes an NFRC's Certified Product Directory (CPD) number and a Certificate Number (when the Component Modeling Approach Label is submitted).

(d) For non-rated fenestration verify Fenestration Certificate of Compliance is completely filled.

(e) The Certificate of Acceptance form is completed and signed.

NA7.4.1.2 Required Documentation

(a) NFRC Product Label Certificate:

1. The Component Modeling Approach (CMA) Label Certificate can list a single or multiple fenestration products, each with its own CPD number on the left column and verified for authenticity by contacting NFRC or
2. The Certificate Number for each CMA Label Certificate can be verified for authenticity by contacting NFRC or
3. Commission's Fenestration Label Certificate:
4. The Fenestration Certificate of Compliance is used to document Fenestration products not certified or rated by NFRC by using the Commission's Default Table values in §110.6- A and Table 110.6-B or the calculated values as indicated Nonresidential Appendix NA6.

(b) Purchase Order or Receipt:

1. A copy of the purchase order or a detailed payment receipt shall be used to cross reference with the NFRC Product Label Certificate CPD number or the Fenestration Certificate of Compliance values; and
2. The purchase order or a detailed payment receipt should match the energy compliance documentation and the building plans.

(c) Fenestration Building Plans:

1. The building plans shall list in a schedule for each fenestration product to be installed in the building.

(d) Certificate of Acceptance Form:

1. The acceptance form shall be filled out by the responsible party and signed; and
2. The signed Certificate of Acceptance shall be submitted to enforcement agency or field inspector; and
3. A copy of the Certificate of Acceptance shall be given to the building owner.

NA7.4.2 Window Films

NA7.4.2.1 Procedures

These procedures detail the installation and verification protocols necessary to meet acceptance requirements of window films. Each window film product shall be provided with a temporary NFRC Label on the box to identify the thermal performance (e.g. U-factor, Solar Heat Gain Coefficient(SHGC), and Visible Transmittance (VT)) of each window film product being installed. The labels, an Energy Commission Default Fenestration Certificate of Compliance form or an NFRC label, shall be located at the job site for verification by the enforcement agency. In addition, the responsible person shall fill out the Installation Certificate and the Certificate of Acceptance, Fenestration Acceptance Certificate. The responsible person shall verify the thermal performance of each window film to be installed matches the energy Certificate of Compliance documentation and building plans. A copy of the Installation and Acceptance certificate shall be given to the building owner and the enforcement agency for their records.

NA7.4.2.2 The Responsible Person or Installer Shall Meet the Following Protocols before Installation:

(a) Verify the name of the manufacture or brand name matches with building plans;

(b) From the building plans or energy compliance forms, identify the azimuth orientation in degrees or in cardinal orientation for each of the window film to be installed to ensure the correct window film specifications are installed in the appropriate orientation;

(c) Verify the temporary NFRC label on the box for each window film's U-factor, Solar Heat Gain (SHGC) and Visible Transmittance (VT) matches the energy compliance Certificate of Installation documentation and building plans, if the U-factor and SHGC values do not

match refer back to the Responsible Person of the building construction or enforcement agency. Energy recompliance may have to be done and building plans updated;

(d) Verify the NFRC Window Film Label Certificate is filled out and includes an NFRC's Certified Product Directory (CPD) number;

(e) List the NFRC Certified Product Directory (CPD) identification (ID) number provided on the label on the Certificate of Installation form;

(f) If no NFRC Label is included on the box or identification of the window film then verify with the Responsible Person of the building construction or enforcement agency to ensure the window film is actually meets or exceeds the energy specifications before installation;

(g) Installation of window films shall follow the **International Window Film Association** (IWFA) Visual Quality Standards for Applied Window Film (dated January 1, 2015); and

(h) After the installation the installer completes and signs the Declaration Statement on the Certificate of Installation. A signed copy of the Certificate(s) of Installation shall remain at the job site for verification by the building inspector.

NA7.4.2.3 Field Technician or Responsible Person Shall Meet the Following Protocols After Installation:

(a) Verify the Certificate of Installation and the Declaration Statement is signed before inspection; and

(b) The window film(s) label on the box matches the Certificate of Installation and building plan's schedule, U-factor, SHGC, and VT for each of the installed window films; and

(c) If any of the acceptance procedures fails, refer back to the Responsible Person, Installer, or the enforcement agency for correction; and, after correction verify failed procedures have been corrected and re-inspect again; and

(d) After window film inspection, complete all parts of the Certificate of Acceptance, including the signature of the Declaration Statements; and

(e) Provide certificates and additional copies to the builder, enforcement agency and building owner at occupancy.

NA7.4.2.4 Documentation at Occupancy:

The following documentation shall be made available to the responsible party of construction or building owner at occupancy;

(a) A completed and signed Certificate of Installation and Certificate of Acceptance, form(s);

(b) The IWFA Visual Quality Standards for Applied Window Film (dated January 1, 2015), a copy can be obtained through www.iwfa.com;

(c) A sample (8" by 10") of the film installed with a copy of its Performance Specification Sheet attached; and

(d) 15 or more year Warranty Certificate(s).

NA7.4.3 Dynamic Glazing

NA7.4.3.1 Procedures

These procedures detail the installation and verification protocols necessary to meet acceptance requirements of dynamic glazing. Each dynamic glazing product shall be provided with a temporary NFRC Label on the glazing or an NFRC Label Certificate to identify the thermal performance (e.g. U-factor, Solar Heat Gain Coefficient(SHGC), and Visible Transmittance (VT)) of each product being installed. The NFRC label certificate shall be located at the job site for verification by the enforcement agency. In addition, the responsible person shall fill out the Certificate of Installation and the Certificate of Acceptance, Fenestration Acceptance Certificate. The responsible person shall verify 1) the dynamic glazing to be installed matches the energy Certificate of Compliance documentation and building plans. A copy of the Installation and Acceptance certificate shall be given to the building owner and the enforcement agency for their records.

NA7.4.3.2 The Responsible Person or Installer Shall Meet the Following Protocols before Installation:

(a) Verify the dynamic glazing matches with building plans and Energy Compliance forms;

(b) From the building plans or energy compliance forms, identify the azimuth orientation in degrees or in cardinal orientation for each of the dynamic glazing to be installed to ensure the correct dynamic glazing specifications or model are installed in the appropriate orientation;

(c) Verify dynamic glazing controls if applicable matches the building plans schedule;

(d) Verify NFRC's Certified Product Directory (CPD) number if applicable;

(e) If no NFRC Label Form is included, then the default values of Table 110.6-A and 110.6-B in Section 110.6 of the Standards are being specified;

(f) Installation of dynamic glazing shall meet the manufacturer's installation instructions;

(g) After the installation the installer completes and signs the Declaration Statement on the Installation Certificate of Installation. A signed copy of the Certificate(s) of Installation shall remain at the job site for verification by the building inspector.

NA7.4.3.3 Field Technician or Responsible Person Shall Meet the Following Protocols After Installation:

(a) Verify the Certificate of Installation and the Declaration Statement is signed before inspection of the installation; and

(b) When controls are installed with the dynamic glazing, it should be verified that it meets the exact operation specifications of the dynamic glazing installation, functional and testing instructions.

(c) After dynamic glazing inspection is complete, ensure the Certificate of Acceptance form is completed and including the signature of the Declaration Statements; and

(d) Provide certificates and additional copies to the builder, enforcement agency and building owner at occupancy.

NA7.4.3.4 Documentation at Occupancy:

The following documentation shall be made available to the responsible party of construction or building owner at occupancy;

(a) A completed and signed Certificate of Installation and Certificate of Acceptance, form(s);

1. If supplied by the manufacturer, a copy of the manufacturer's warranty and user manual.

NA7.4.4 Clerestories for PAF

NA7.4.4.1 Procedures

These procedures detail the installation and verification protocols necessary to meet acceptance requirements of clerestory fenestrations for PAF. In addition, the responsible person shall fill out the Certificate of Installation and the Certificate of Acceptance. The responsible person shall verify the clerestory fenestration to be installed matches the energy compliance documentation (Certificate of Compliance) and building plans. A copy of the Installation and Acceptance certificate shall be given to the building owner and the enforcement agency for their records.

For buildings with up to seven (7) clerestory fenestration units claiming the Clerestory Fenestration PAF, all clerestory fenestration units shall be tested. For buildings with more than seven (7) clerestory fenestration units claiming the PAF, random sampling may be done to select the seven clerestory fenestration units. If any of the clerestory fenestration units in the sample group or seven clerestory fenestration units fails the acceptance test, another group of seven clerestory fenestration units must be tested.

NA7.4.4.2 The Responsible Person or Installer Shall Meet the Following Protocols before Installation:

(a) Verify the height of the clerestory fenestration's head height and glazing height match the building plans;

(b) Installation of clerestory fenestration shall meet the manufacturer's installation instructions;

(c) After the installation the installer completes and signs the Declaration Statement on the Certificate of Installation. A signed copy of the Certificate(s) shall remain at the job site for verification by the building inspector.

NA7.4.4.3 Field Technician or Responsible Person Shall Meet the Following Protocols After Installation:

(a) Verify the Certificate of Installation and the Declaration Statement is signed before inspection of the installation; and

(b) If operable shading is installed on the clerestory fenestration, verify that the clerestory fenestration shading is controlled separately from other fenestration shading control.

(c) After clerestory fenestration inspection is completed, complete the Certificate of Acceptance Test and sign the Declaration Statements of the certificate; and

(d) Provide certificates and additional copies to the builder, enforcement agency and building owner at occupancy.

NA7.4.4.4 Documentation at Occupancy:

The following documentation shall be made available to the responsible party of construction or building owner at occupancy;

(a) A completed and signed copy of the Certificate of Installation and the Certificate of Acceptance Test, form(s);

(b) If supplied by the manufacturer, a copy of the manufacturer's warranty and user manual.

NA7.4.5 Interior and Exterior Horizontal Slats

NA7.4.5.1 Procedures

These procedures detail the installation and verification protocols necessary to meet acceptance requirements of interior and exterior horizontal slats for PAF. -In addition, the responsible person shall fill out the Certificate of Installation and the Certificate of Acceptance. The responsible person shall verify the horizontal slat to be installed matches the energy compliance documentation (Certificate of Compliance) and building plans. A copy of the Installation and Acceptance certificate shall be given to the building owner and the enforcement agency for their records.

For buildings with up to and including seven (7) horizontal slat assemblies claiming the Interior and Exterior Horizontal Slats for PAF or RSHGC for exterior horizontal slats, all horizontal slat assemblies shall be tested. For buildings with more than seven (7) horizontal slat assemblies claiming, random sampling may be done to select the seven horizontal slat assemblies. If any of the horizontal slat assemblies in the sample group or seven horizontal slat assemblies fails the acceptance test, another group of seven horizontal slat assemblies must be tested.

Each horizontal slat assembly shall be provided with documentation of visible reflectance testing per ASTM E903 and may come with documentation of visible transmittance testing per ASTM E1175. The documentation shall be located at the job site for verification by the enforcement agency.

NA7.4.5.2 The Responsible Person or Installer Shall Meet the Following Protocols before Installation:

(a) Verify the horizontal (not diagonal or vertical) distance from the front edge of the slat to the back edge of the slat matches the building plans;

(b) Verify the vertical (not diagonal or horizontal) distance from the lowest edge of the slat to the highest edge of the slat below it matches the building plans;

(c) Verify there is a factory installed label permanently affixed and prominently located at a mounting point of the slat to the building;

(d) Verify the visible reflectance on the ASTM E903 test results matches the building plans;

(e) If the horizontal slat surfaces are not opaque and free of perforations, verify that the horizontal slat's ASTM E1175 test results matches the building plans;

(f) Installation of horizontal slats shall meet the manufactures installation instructions; and

(g) After the installation the installer completes and signs the Declaration Statement on the Certificate of Installation. -A signed copy of the Certificate(s) shall remain at the job site for verification by the building inspector.

NA7.4.5.3 Field Technician or Responsible Person Shall Meet the Following Protocols After Installation:

(a) Verify the Certificate of Installation and the Declaration Statement is signed before inspection of the installation;

(b) Verify that horizontal slats are permanently mounted;

(c) If the horizontal slats extend beyond each side of the window jamb, then verify the extension matches the length shown on the building plans;

(d) If the horizontal slats do not extend beyond each side of the window jamb, then verify that the horizontal slats are entirely within the window rough opening or that fins at the window jambs match the building plans;

(e) Verify that horizontal slat assemblies extend the entire height of the window;

(f) Verify that exterior horizontal slats are horizontal or slope downwards from the window and that interior horizontal slats are horizontal or slope upwards from the window;

(g) After horizontal slats inspection is completed, complete the Certificate of Acceptance Test and sign the Declaration Statements of the certificate; and

(h) Provide certificates and additional copies to the builder, enforcement agency and building owner at occupancy.

NA7.4.5.4 Documentation at Occupancy:

The following documentation shall be made available to the responsible party of construction or building owner at occupancy;

(a) A completed and signed copy of the Certificate of Installation and the Certificate of Acceptance Test, form(s);

(b) If supplied by the manufacturer, a copy of the manufacturer's warranty and user manual;

(c) ASTM E903 test results and, if applicable, ASTM E1175 results should also be retained by the building owner.

NA7.4.6 Interior and Exterior Light Shelves for PAF

NA7.4.6.1 Procedures

These procedures detail the installation and verification protocols necessary to meet acceptance requirements of interior and exterior light shelves for PAF. In addition, the responsible person shall fill out Certificate of Acceptance. The responsible person shall verify the light shelf to be installed matches the energy compliance documentation (Certificate of Compliance) and building plans. A copy of the Installation and Acceptance certificate shall be given to the building owner and the enforcement agency for their records.

For buildings with up to seven (7) light shelf units claiming the Interior and Exterior Light Shelves for PAF, all light shelf units shall be tested. For buildings with more than seven (7) light shelf units claiming the PAF, random sampling may be done to select the seven light shelf units. If any of the light shelf units in the sample group or seven light shelf units fails the acceptance test, another group of seven light shelf units must be tested.

Each interior light shelf shall be provided with documentation of visible reflectance testing per ASTM E903. Exterior light shelves may be provided with documentation of visible reflectance testing per ASTM E903. The documentation shall be located at the job site for verification by the enforcement agency.

NA7.4.6.2 The Responsible Person or Installer Shall Meet the Following Protocols before Installation:

(a) Verify the horizontal (not diagonal or vertical) distance from the front edge of the interior light shelf to the back edge of the light shelf matches the building plans;

(b) Verify the vertical (not diagonal or horizontal) distance from the highest edge of the interior light shelf to the top of the clerestory window above it matches the building plans;

(c) Verify the visible reflectance on the ASTM E903 test results of the interior light shelf matches the building plans;

(d) If there is an exterior light shelf:

1. Verify the horizontal (not diagonal or vertical) distance from the front edge of the exterior light shelf to the back edge of the exterior light shelf matches the building plans;
2. verify the vertical (not diagonal or horizontal) distance from the lowest edge of the exterior light shelf to the sill of the window below it matches the building plans;
3. If the exterior light shelf is less than two feet below the clerestory window sill, verify the visible reflectance on the ASTM E903 test results matches the building plans;

(e) Verify that light shelves are installed at the height specified in the building plans ;

(f) Installation of light shelves shall meet the manufacturer's installation instructions;

(g) After the installation the installer completes and signs the Declaration Statement on the Certificate of Installation. A signed copy of the Certificate(s) shall remain at the job site for verification by the building inspector.

NA7.4.6.3 Field Technician or Responsible Person Shall Meet the Following Protocols After Installation:

(a) Verify the Certificate of Installation and the Declaration Statement is signed before inspection of the installation; and

(b) If there is any window area below the interior light shelf on the same floor, then verify there is an exterior light shelf above that window area.

(c) Verify that that the light shelf is permanently mounted;

(d) Verify the light shelf extends beyond each side of the window jamb by the length shown on the building plans;

(e) Verify that interior light shelves are horizontal;

(f) If there is an exterior light shelf, verify that the exterior light shelf is horizontal or slopes downwards from the window;

(g) If operable shading is installed on the clerestory window, then verify the clerestory window shading is controlled separately from shading serving other vertical fenestration;

(h) After light shelves inspection is completed, complete the Certificate of Acceptance Test and sign the Declaration Statements of the certificate; and

(i) Provide certificates and additional copies to the builder, enforcement agency and building owner at occupancy.

NA7.4.6.4 Documentation at Occupancy:

The following documentation shall be made available to the responsible party of construction or building owner at occupancy;

(a) A completed and signed copy of the Certificate of Installation and the Certificate of Acceptance Test, form(s);

(b) If supplied by the manufacturer, a copy of the manufacturer's warranty and user manual;~~.~~

(c) ASTM E 903 test results and, if applicable, ASTM E1175 results should also be retained by the building owner.

NA7.5 Mechanical Systems Acceptance Tests

NA7.5.1 Outdoor Air

NA7.5.1.1 Variable Air Volume Systems Outdoor Air Acceptance

NA7.5.1.1.1 Construction Inspection

Prior to functional testing, verify and document the following:

(a) Sensor used to control outdoor air flow is either factory calibrated or field calibrated.

(b) Attach calibration certification or results.

(c) Dynamic damper control is being used to control outside air.

(d) Specify the type of dynamic control being utilized to control outside air.

(e) Specify the method of delivering outside air to the unit.

(f) Pre-occupancy purge has been programmed for the 1-hour period immediately before the building is normally occupied.

NA7.5.1.1.2 Functional Testing

Step 1: If the system has an outdoor air economizer, force the economizer high limit to disable economizer control (e.g. for a fixed drybulb high limit, lower the setpoint below the current outdoor air temperature).

Step 2: Adjust supply airflow to achieve design airflow or maximum airflow at full cooling. Verify and document the following:

(a) Measured outside airflow reading is within 10 percent of the total ventilation air called for in the Certificate of Compliance.

(b) Outside air damper position stabilizes within 5 minutes.

Step 3: Adjust supply airflow to either the sum of the minimum zone airflows, full heating, or 30 percent of the total design airflow. Verify and document the following:

(a) Measured outside airflow reading is within 10 percent of the total ventilation air called for in the Certificate of Compliance.

(b) Outside air damper position stabilizes within 5 minutes.

Step 4: Restore system to "as-found" operating conditions

NA7.5.1.2 Constant Volume System Outdoor Air Acceptance

NA7.5.1.2.1 Construction Inspection

Prior to Functional Testing, verify and document the following:

(a) System is designed to provide a fixed minimum OSA when the unit is on.

(b) Specify the method of delivering outside air to the unit.

(c) Pre-occupancy purge has been programmed for the 1-hour period immediately before the building is normally occupied.

(d) Minimum position is marked on the outside air damper.

(e) The system has means of maintaining the minimum outdoor air damper position.

NA7.5.1.2.2 Functional Testing

Step 1: If the system has an outdoor air economizer, force the economizer to the minimum position and stop outside air damper modulation (e.g. for a fixed drybulb high limit, lower the setpoint below the current outdoor air temperature).

(a) Measured outside airflow reading is within 10 percent of the total ventilation air called for in the Certificate of Compliance.

NA7.5.2 Constant-Volume, Single-Zone, Air Conditioners and Heat Pumps

NA7.5.2.1 Construction Inspection

Prior to Functional Testing, verify and document the following:

(a) Thermostat is located within the space-conditioning zone that is served by the HVAC system.

(b) Thermostat meets the temperature adjustment and dead band requirements of Standards §120.2(b).

(c) Occupied, unoccupied, and holiday schedules have been programmed as specified by the facility's schedule.

(d) Pre-occupancy purge has been programmed to meet the requirements of Standards §120.1(d)2.

NA7.5.2.2 Functional Testing

Step 1: Disable economizer and demand control ventilation systems (if applicable).

Step 2: Simulate a heating demand during the occupied condition. Verify and document the following:

(a) Supply fan operates continually.

(b) The unit provides heating.

(c) No cooling is provided by the unit.

(d) Outside air damper is at minimum position.

Step 3: Simulate operation in the dead band during occupied condition. Verify and document the following:

(e) Supply fan operates continually.

(f) Neither heating nor cooling is provided by the unit.

(g) Outside air damper is at minimum position.

Step 4: Simulate cooling demand during occupied condition. Lock out economizer (if applicable). Verify and document the following:

(h) Supply fan operates continually.

(i) The unit provides cooling.

(j) No heating is provided by the unit.

(k) Outside air damper is at minimum position.

Step 5: Simulate operation in the dead band during unoccupied mode. Verify and document the following:

(l) Supply fan is off.

(m) Outside air damper is fully closed.

(n) Neither heating nor cooling is provided by the unit.

Step 6: Simulate heating demand during unoccupied conditions. Verify and document the following:

(o) Supply fan is on (either continuously or cycling).

(p) Heating is provided by the unit.

(q) No cooling is provided by the unit.

(r) Outside air damper is either closed or at minimum position.

Step 7: Simulate cooling demand during unoccupied condition. Lock out economizer (if applicable). Verify and document the following:

(s) Supply fan is on (either continuously or cycling).

(t) Cooling is provided by the unit.

(u) No heating is provided by the unit.

(v) Outside air damper is either closed or at minimum position.

Step 8: Simulate manual override during unoccupied condition. Verify and document the following:

(w) System operates in “occupied” mode.

(x) System reverts to “unoccupied” mode when manual override time period expires.

Step 9: Restore economizer and demand control ventilation systems (if applicable), and remove all system overrides initiated during the test.

NA7.5.3 Air Distribution Systems

NA7.5.3.1 Construction Inspection

Prior to Functional Testing on new duct systems, verify and document the following:

(a) Duct connections meet the requirements of Standards §120.4.

(b) Specify choice of drawbands.

(c) Flexible ducts are not constricted in any way.

(d) Duct leakage tests shall be performed before access to ductwork and connections are blocked.

(e) Joints and seams are properly sealed according to the requirements of Standards §120.4.

(f) Joints and seams are not sealed with cloth back rubber adhesive tape unless used in combination with Mastic and drawbands. Cloth backed tape may be used if tape has been approved by the CEC. Ducts are fully accessible for testing.

(g) Insulation R-Values meet the minimum requirements of §120.4(a).Insulation is protected from damage and suitable for outdoor service if applicable as specified by Standards §120.4(f).

Prior to Functional Testing on all new and existing duct systems, visually inspect to verify that the following locations have been sealed:

(h) Connections to plenums and other connections to the forced air unit;

(i) Refrigerant line and other penetrations into the forced air unit;

(j) Air handler door panel (do not use permanent sealing material, metal tape is acceptable);

(k) Register boots sealed to surrounding material; and

(l) Connections between lengths of duct, as well as connections to takeoffs, wyes, tees, and splitter boxes.

NA7.5.3.2 Functional Testing

Step 1: Perform duct leakage test as specified by Reference Nonresidential Appendix NA2 to verify the duct leakage conforms to the requirements of Standards §120.4(g)~~140.4(l)1~~ and §141.0(b)2Dii.

Step 2: Obtain HERS Rater field verification as specified in Reference Nonresidential Appendix NA1. Or at the discretion of the enforcement agency, field verification may be satisfied by the ATT as specified in Reference Nonresidential Appendix NA1.9.

NA7.5.4 Air Economizer Controls and Exhaust Air Heat Recovery

NA7.5.4.1 Construction Inspection

Prior to Functional Testing, verify and document the following:

(a) Economizer or heat recovery bypass high limit shutoff control complies with Table 140.4-E of Section140.4(e)2.

(b) If the high-limit control is fixed dry-bulb or fixed enthalpy + fixed dry-bulb, it shall have an adjustable setpoint.

(c) Economizer or heat recovery bypass lockout control sensor is located to prevent false readings.

(d) Sensor performance curve is provided by factory with economizer or heat recovery bypass instruction material.

(e) Sensor output value measured during sensor calibration is plotted on the performance curve.

(f) Economizer or heat recovery bypass damper moves freely without binding.

1. Indicate if bypass control is achieved through heat/energy recovery wheel rotation speed modulation as means other than air dampers,

(g) Economizer or heat recovery bypass has control systems, including two-stage or electronic thermostats, that cycle compressors off when economizers or heat recovery bypass can provide partial cooling.

(h) Economizer reliability features are present as specified by Standards Section 140.4(e)2D.

1. Indicate N/A for heat recovery bypass.

(i) Economizer inlet damper is designed to modulate up to 100 percent open, and return air damper to 100 percent closed, without over-pressurizing the building.

1. Indicate N/A for heat recovery bypass.

(j) For systems with DDC controls lockout sensor(s) are either factory calibrated or field calibrated.

(k) For systems with non-DDC controls, manufacturer's startup and testing procedures have been applied.

(l) The economizer has been certified to the Energy Commission as specified by Section 140.4(e)2Diii.

1. Indicate N/A for heat recovery bypass.

NA7.5.4.2 Functional Testing

Step 1: Disable demand control ventilation systems (if applicable).

Step 2: Enable the economizer and simulate a cooling demand large enough to drive the system into full economizer cooling mode (e.g., the economizer or heat recovery bypass is fully open. Verify and document the following:

(a) Economizer or heat recovery bypass damper is 100 percent open and return air damper is 100 percent closed.

1. If bypass is achieved through heat/energy recovery wheel rotation speed modulation, wheel speed is fully stopped.

(b) All applicable fans and dampers operate as intended to maintain building pressure.

(c) The unit heating is disabled (if unit has heating capability).

Step 3: Disable the economizer and simulate a cooling demand. Verify and document the following:

(d) Economizer damper closes to its minimum position.

(e) All applicable fans and dampers operate as intended to maintain building pressure.

(f) The unit heating is disabled (if unit has heating capability).

(g) Indicate N/A for this step for heat recovery bypass.

Step 4: If unit has heating capability, simulate a heating demand and set the economizer so that it is capable of operating (i.e. actual outdoor air conditions are below lockout setpoint). Verify the following:

For economizer systems

(h) The economizer is at minimum position.

(i) Return air damper opens.

For HRV/ERV or DOAS systems:

(j) Heat recovery bypass control modulates bypass damper/wheel speed to control temperature setpoint

Step 5: Turn off the unit. Verify and document the following:

(k) Economizer damper closes completely.

(l) Indicate N/A for this step for heat recovery bypass.

Step 6: Restore demand control ventilation systems (if applicable) and remove all system overrides initiated during the test.

NA7.5.5 Demand Control Ventilation (DCV) Systems

NA7.5.5.1 Construction Inspection

Prior to Functional Testing, verify and document the following:

(a) Carbon dioxide control sensor is factory calibrated as specified by §120.1(d)4.

(b) The sensor is located in the high density space between 3 ft and 6 ft above the floor or at the anticipated level of the occupants' heads.

(c) DCV control setpoint is at or below the CO_2 concentration permitted by §120.1(d)4.C.

NA7.5.5.2 Functional Testing

Step 1: Disable economizer controls.

Step 2: Simulate a signal at or slightly above the CO_2 concentration setpoint required by §120.1(d)4.C. Verify and document the following:

(a) For single zone units, outdoor air damper modulates open to satisfy the total ventilation air called for in the Certificate of Compliance.

(b) For multiple zone units, the zone damper (or outdoor air damper when applicable) modulates open to satisfy the zone ventilation requirements.

Step 3: Simulate signal well below the CO_2 setpoint. Verify and document the following:

(c) For single zone units, outdoor air damper modulates to the design minimum value.

(d) For multiple zone units, the zone damper (or outdoor air damper when applicable) modulates to satisfy the reduced zone ventilation requirements.

Step 4: Restore economizer controls and remove all system overrides initiated during the test.

Step 5: With all controls restored, apply CO_2 calibration gas at a concentration slightly above the setpoint to the sensor. Verify that the outdoor air damper modulates open to satisfy the total ventilation air called for in the Certificate of Compliance.

NA7.5.6 Supply Fan Variable Flow Controls

NA7.5.6.1 Construction Inspection

Prior to Functional Testing, verify and document the following:

(a) Supply fan includes device(s) for modulating airflow, such as variable speed drive or electrically commutated motor.

(b) For multiple zone systems:

1. Discharge static pressure sensors are either factory calibrated or field-calibrated.
2. The static pressure location, setpoint, and reset control meets the requirements of §140.4(c)2.A and §140.4(c)2.B.

NA7.5.6.2 Functional Testing

Step 1: Simulate demand for full design airflow. Verify and document the following:

(a) Supply fan controls modulate to increase capacity.

(b) For multiple zone systems, supply fan maintains discharge static pressure within +/-10 percent of the current operating setpoint.

(c) Supply fan controls stabilize within a 5 minute period.

Step 2: Simulate demand for reduced or minimum airflow. Verify and document the following:

(d) Supply fan controls modulate to decrease capacity.

(e) Current operating setpoint has decreased (for systems with DDC to the zone level).

(f) For multiple zone systems, supply fan maintains discharge static pressure within +/-10 percent of the current operating setpoint.

(g) Supply fan controls stabilize within a 5 minute period.

Step 3: Restore system to correct operating conditions.

NA7.5.7 Valve Leakage Test

NA7.5.7.1 Construction Inspection

Prior to Functional Testing, verify and document the following:

(a) Valve and piping arrangements were installed as specified by the design drawings.

NA7.5.7.2 Functional Testing

Step 1: For each of the pumps serving the distribution system, dead head the pumps using the discharge isolation valves at the pumps. Document the following:

(a) Record the differential pressure across the pumps.

(b) Verify that this is within 5 percent of the submittal data for the pump.

Step 2: Reopen the pump discharge isolation valves. Automatically close all valves on the systems being tested. If 3-way valves are present, close off the bypass line. Verify and document the following:

(c) The valves automatically close.

(d) Record the pressure differential across the pump.

(e) Verify that the pressure differential is within 5 percent of the reading from Step 1 for the pump that is operating during the valve test.

Step 3: Restore system to correct operating conditions.

NA7.5.8 Supply Water Temperature Reset Controls

NA7.5.8.1 Construction Inspection

Prior to Functional Testing, verify and document the following:

(a) Supply water temperature sensors have been either factory or field calibrated.

NA7.5.8.2 Functional Testing

Step 1: Change reset control variable to its maximum value. Verify and document the following:

(a) Chilled or hot water temperature setpoint is reset to appropriate value.

(b) Verify that actual supply temperature changes to within 2 percent of the new setpoint.

Step 2: Change reset control variable to its minimum value. Verify and document the following:

(c) Chilled or hot water temperature setpoint is reset to appropriate value.

(d) Verify that actual supply temperature changes to within 2 percent of the new setpoint.

Step 3: Restore reset control variable to automatic control. Verify and document the following:

(e) Chilled or hot water temperature set-point is reset to appropriate value.

(f) Verify that actual supply temperature changes to within 2 percent of the new setpoint.

NA7.5.9 Hydronic System Variable Flow Controls

NA7.5.9.1 Construction Inspection

Prior to Functional Testing, verify and document the following:

(a) The static pressure location, setpoint, and reset control meets the requirements of the Standards Section 140.4(k)6B.

(b) Pressure sensors are either factory or field calibrated.

NA7.5.9.2 Functional Testing

Step 1: Modulate control valves to reduce water flow to 50 percent of the design flow or less, but not lower than the pump minimum flow. Verify and document the following:

(a) Pump operating speed decreases (for systems with DDC to the zone level).

(b) Current operating setpoint has not increased (for all other systems that are not DDC).

(c) System pressure is within 5 percent of current operating setpoint.

(d) System operation stabilizes within 5 minutes after test procedures are initiated.

Step 2: Open control valves to increase water flow to a minimum of 90 percent design flow. Verify and document the following:

(e) Pump speed increases.

(f) Pumps are operating at 100 percent speed.

(g) System pressure is greater than the setpoint in Step 1.

(h) System pressure is either within ±5 percent of current operating setpoint. System operation stabilizes within 5 minutes after test procedures are initiated.

Step 3: Restore system to correct operating conditions.

NA7.5.10 Automatic Demand Shed Control Acceptance

NA7.5.10.1 Construction Inspection

Prior to Acceptance Testing, verify and document the following:

(a) That the EMCS interface enables activation of the central demand shed controls.

NA7.5.10.2 Functional Testing

Step 1: Engage the global demand shed system. Verify and document the following:

(a) That the cooling setpoint in non-critical spaces increases by the proper amount.

(b) That the cooling setpoint in critical spaces do not change.

Step 2: Disengage the global demand shed system. Verify and document the following:

(c) That the cooling setpoint in non-critical spaces return to their original values.

(d) That the cooling setpoint in critical spaces do not change.

NA7.5.11 Fault Detection and Diagnostics (FDD) for Packaged Direct-Expansion Units

NA7.5.11.1 Construction Inspection

Prior to Functional Testing, verify and document the following:

(a) Verify fault detection and diagnostics (FDD) hardware is installed on HVAC unit.

(b) Verify the FDD system matches the make and model reported on the design drawings.

(c) Verify the following air temperature sensors are permanently installed:

1. Outside air.
2. Supply air.
3. Return air.

(d) Verify the controller has the capability of displaying the value of the following parameters:

1. Air temperatures: outside air, supply air, return air.

(e) Verify the controller provides system status by indicating the following conditions:

1. Free cooling available.
2. Economizer enabled.
3. Compressor enabled.
4. Heating enabled.
5. Mixed air low limit cycle active.

NA7.5.11.2 Functional Testing

For each HVAC unit to be tested, complete the following:

NA7.5.11.2.1 Functional Testing for Air Temperature Sensor Failure/Fault

Step 1: Verify the FDD system indicates normal operation.

Step 2: Disconnect outside air temperature sensor from unit controller. Verify and document the following:

(a) FDD system reports a fault.

Step 3: Connect outside air temperature sensor to unit controller. Verify and document the following:

(b) FDD system indicates normal operation.

NA7.5.11.2.2 Functional Testing for Excess Outside Air

Step 1: Coordinate this test with NA7.5.1 Outdoor Air.

(a) If NA7.5.1 Outdoor Air passes, verify FDD system indicates normal operation.

NA7.5.11.2.3 Functional Testing for Economizer Operation

Step 1: Interfere with normal unit operation so test NA7.5.4 Air Economizer Controls fails by immobilizing the outdoor air economizer damper according to manufacturer's instructions.

(a) After NA7.5.4 Air Economizer Controls fails, verify FDD system reports a fault.

Step 2: Successfully complete and pass NA7.5.4 Air Economizer Controls.

(b) After NA7.5.4 Air Economizer Controls passes, verify FDD system reports normal operation.

NA7.5.12 Automatic Fault Detection and Diagnostics (FDD) for Air Handling Units and Zone Terminal Units.

NA7.5.12.1 Construction Inspection for Air Handling Units

Prior to Functional Testing, verify and document the following:

a) Verify on the submittal documents or sensor specifications that locally installed supply air, outside air, and return air (if applicable) temperature sensors have an accuracy of ±2ºF over the range of 40ºF to 80ºF.

NA7.5.12.2 Functional Testing for Air Handling Unit Economizers

Testing of each AHU with FDD controls shall include the following tests.

(a) Bypass alarm delays.

Step 1: If applicable, bypass alarm delays to ensure that faults generate alarms immediately.

(b) Sensor failure:

Step 1: Disconnect local supply air temperature sensor from unit controller.

Step 2: Verify that the FDD system reports a fault.

Step 3: Connect SAT sensor to the unit controller.

Step 4: Verify that FDD indicates normal system operation and clear all faults and alarms.

Step 5: If the outside air temperature sensor is local, disconnect the local OAT from the unit controller.

Step 6: Verify that the FDD system reports a fault.

Step 7: Connect the local OAT sensor to the unit controller.

Step 8: Verify that FDD indicates normal system operation and clear all faults and alarms.

(c) Inappropriate economizing:

Step 1: Override the operating state to occupied heating mode by overriding zone thermostat(s) to create a heating demand and overriding the OAT sensor below the low limit lockout.

Step 2: From the control system workstation, override the economizer dampers to 100 percent outdoor air.

Step 3: Verify that a fault is reported at the control workstation.

Step 4: Remove the economizer damper override and verify that the control system indicates normal system operation.

Step 5: Remove all overrides and clear all faults and alarms.

Step 6: Override the operating state to economizer-only cooling mode by overriding zone thermostat(s) to create a cooling demand and overriding the OAT sensor so that free cooling is available.

Step 7: From the control system workstation, override the economizer dampers to 0 percent outdoor air.

Step 8: Verify that a fault is reported at the control workstation.

Step 9: Remove the economizer damper override and verify that the control system indicates normal system operation.

Step 10: Remove all overrides and clear all faults and alarms.

(d) Reinstate alarm delay.

Step 1: Reinstate alarm delays to ensure that faults generate alarms as before step (a), if applicable.

NA7.5.12.3 Functional Testing for Air Handling Unit Valves

(a) Bypass alarm delays

Step 1: If applicable, bypass alarm delays to ensure that faults generate alarms immediately

(b) Valve/actuator fault:

Step 1: Override the operating state to occupied cooling mode by overriding zone thermostat(s) to create a cooling demand and overriding the OAT sensor to 90ºF.

Step 2: From the control system workstation, override the heating coil valves to the full open position (100 percent heating mode).

Step 3: Verify flow through the valve by differential temperature or differential pressure method.

Step 4: Verify that a fault is reported at the control workstation.

Step 5: Remove the heating coil valve override and verify that the control system indicates normal system operation.

Step 6: Remove all overrides and clear all faults and alarms.

Step 7: Override the operating state to occupied heating mode by overriding zone thermostat(s) to create a heating demand and overriding the OAT sensor to 40ºF.

Step 8: From the control system workstation, override the cooling coil valve to the full open position (100 percent~~%~~ cooling mode).

Step 9: Verify flow through the valve by differential temperature or differential pressure method.

Step 10: Verify that a fault is reported at the control workstation.

Step 11: Remove the cooling coil valve override and verify that the control system indicates normal system operation.

Step 12: Remove all overrides and clear all faults and alarms.

(c) Reinstate alarm delay.

Step 1: Reinstate alarm delays to ensure that faults generate alarms as before Step (a), if applicable.

NA7.5.12.4 Functional Testing for Zone Terminal Units

Testing shall be performed on one of each type of terminal unit (VAV box) in the project. A minimum of 5 percent of the terminal boxes shall be tested.

(a) Sensor drift/failure:

Step 1: Disconnect the tubing to the differential pressure sensor of the VAV box.

Step 2: Verify that control system detects and reports the fault.

Step 3: Reconnect the sensor and verify proper sensor operation.

Step 4: Verify that the control system does not report a fault.

(b) Damper/actuator fault:

1. Damper stuck open.

   Step 1: Command the damper to be fully open (room temperature above setpoint).

   Step 2: Disconnect the actuator to the damper.

   Step 3: Adjust the cooling setpoint so that the room temperature is below the cooling setpoint to command the damper to the minimum position. Verify that the control system reports a fault.

   Step 4: Reconnect the actuator and restore to normal operation.

2. Damper stuck closed.

   Step 1: Set the damper to the minimum position.

   Step 2: Disconnect the actuator to the damper.

   Step 3: Set the cooling setpoint below the room temperature to simulate a call for cooling. Verify that the control system reports a fault.

   Step 4: Reconnect the actuator and restore to normal operation.

(c) Valve/actuator fault (For systems with hydronic reheat):

Step 1: Command the reheat coil valve to (full) open.

Step 2: Disconnect power to the actuator. Set the heating setpoint temperature to be lower than the current space temperature, to command the valve closed. Verify that the fault is reported at the control workstation.

Step 3: Reconnect the actuator and restore normal operation.

(d) Feedback loop tuning fault (unstable airflow):

Step 1: Set the integral coefficient of the box controller to a value 50 times the current value.

Step 2: The damper cycles continuously and airflow is unstable. Verify that the control system detects and reports the fault.

Step 3: Reset the integral coefficient of the controller to the original value to restore normal operation.

(e) Disconnected inlet duct:

Step 1: From the control system workstation, commands the damper to full closed, then disconnect power to the actuator and verify that a fault is reported at the control workstation.

(f) Discharge air temperature sensor:

Step 1: Adjust zone setpoints to drive the box from dead band to full heating.

Step 2: Verify that in heating, the supply air temperature resets up to the maximum setpoint while the airflow is maintained at the dead band flow rate.

Step 3: Verify that after the supply air temperature is reset up to the maximum setpoint, the airflow rate then increases up to the heating maximum flow rate in order to meet the heating load.

NA7.5.13 Distributed Energy Storage DX AC Systems Acceptance Tests[3]

These acceptance requirements apply only to constant or variable volume, direct expansion (DX) systems with distributed energy storage (DES/DXAC). These acceptance requirements are in addition to those for other systems or equipment such as economizers, packaged equipment, etc.

NA7.5.13.1 Construction Inspection

Prior to Performance Testing, verify and document the following:

(a) The water tank is filled to the proper level.

(b) The water tank is sitting on a foundation with adequate structural strength.

(c) The water tank is insulated and the top cover is in place.

(d) The DES/DXAC is installed correctly (refrigerant piping, etc.).

(e) Verify that the correct model number is installed and configured.

NA7.5.13.2 Equipment Testing

Step 1: Simulate cooling load during daytime period (e.g. by setting time schedule to include actual time and placing thermostat cooling set-point below actual temperature). Verify and document the following:

(a) Supply fan operates continually.

(b) If the DES/DXAC has cooling capacity, DES/DXAC runs to meet the cooling demand (in ice melt mode).

(c) If the DES/DXAC has no ice and there is a call for cooling, the DES/DXAC runs in direct cooling mode.

Step 2: Simulate no cooling load during daytime condition. Verify and document the following:

(d) Supply fan operates as specified by the facility thermostat or control system.

(e) The DES/DXAC and the condensing unit do not run.

Step 3: Simulate no cooling load during morning shoulder time period. Verify and document the following:

(f) The DES/DXAC is idle.

[3] From AEC, Distributed Energy Storage for Direct-Expansion Air Conditioners, January 27, 2005

Step 4: Simulate a cooling load during morning shoulder time period. Verify and document the following:

(g) The DES/DXAC runs in direct cooling mode.

NA7.5.13.3 Calibrating Controls

Set the proper time and date, as specified by manufacturer's installation manual for approved installers.

NA7.5.14 Thermal Energy Storage (TES) Systems

The following acceptance tests apply to thermal energy storage systems that are used in conjunction with chilled water air conditioning systems.

NA7.5.14.1 Eligibility Criteria

The following types of TES systems are eligible for compliance credit:

(a) Chilled Water Storage

(b) Ice-on-Coil Internal Melt

(c) Ice-on-Coil External Melt

(d) Ice Harvester

(e) Brine

(f) Ice-Slurry

(g) Eutectic Salt

(h) Clathrate Hydrate Slurry (CHS)

(i) Cryogenic

(j) Encapsulated (e.g. Ice Balls)

The following Certificate of Compliance information for both the chiller and the storage tank shall be provided on the plans to document the key TES System parameters and allow plan check comparison to the inputs used in the compliance software.

Chiller:

(k) Brand and Model

(l) Type (Centrifugal, Reciprocating, Other)

(m) Heat Rejection Type (Air, Water, Other)

(n) Charge Mode Capacity (Tons)

(o) Discharge Mode Capacity (Tons)

(p) Discharge Mode Efficiency (kW/Ton or EER)

(q) Charge Mode Efficiency (kW/Ton or EER)

(r) Fluid Type and Percentage

Storage Tank:

(s) Brand and Model

(t) Number of Tanks

(u) Storage Capacity per Tank (ton-hours)

(v) Storage Rate (tons)

(w) Minimum Charging Temperature

(x) Discharge Rate (tons)

NA7.5.14.2 Functional Testing

Acceptance testing also shall be conducted and documented on the Certificate of Acceptance in two parts:

In the TES System Design Verification part, the installing contractor shall certify the following information, which verifies proper installation of the TES System consistent with system design expectations:

(a) Chiller(s) start-up procedure has been completed.

(b) System fluid test and balance has been completed.

(c) Air separation and purge has been completed.

(d) Fluid (e.g. glycol) has been verified at the concentration and type indicated on the design documents.

(e) The TES system has been fully charged at least once and the charge duration noted.

(f) The system has been partially discharged at least once and the discharge duration noted.

(g) The system is in a partial charge state in preparation for step 2 tests.

(h) The schedule of operation has been activated as designed.

(i) Mode documentation describes the state of system components in each mode of operation.

In the TES System Controls and Operation Verification part, the installing contractor also shall complete the following acceptance testing to ensure the TES System is controlled and operates consistent with the compliance simulation. The installing contractor shall convey the results of the testing to the enforcement agency using the Certificate of Acceptance.

(a) Verify that the TES system and the chilled water plant is controlled and monitored by an energy management system (EMS).

(b) Indicate the method of simulation that will be used during the test. Either manual selection of each operating mode or the use of an EMS by inputting the schedule as indicated by the designer.

(c) Storage/charge mode. Manually select storage mode. Verify that the TES system stores energy. If scheduled, input the time interval that would result in storage/charge mode. Verify that the TES system stores energy.

(d) End of charge signal. Simulate a full storage charge by changing the (manufacturer recommended) thermal storage end of charge output sensor to the EMS. Verify that the storage charging has stopped.

(e) Discharge mode. Generate a call for cooling. Manually select storage only discharge mode. Verify that the TES system starts discharging with the compressors off. Return to the off/secured mode. If scheduled, input the time interval that would result in discharge mode and verify that the storage starts discharging with the compressors off.

(f) Mechanical cooling only mode. Generate a call for cooling. Manually select mechanical cooling only mode and verify that the storage does not discharge and the cooling load is met by the compressor only. Return to the off/secure mode. If scheduled, input the time interval that would result in mechanical cooling only mode and verify that the storage does not discharge and the cooling load is met by the compressor only.

(g) Discharge and mechanical cooling mode. Generate a call for cooling. Manually select discharge and mechanical cooling mode and verify that the TES system discharges with the compressor sharing the load. If scheduled, input the time interval that would result in discharge and mechanical cooling mode and verify that the storage starts discharging with the compressor sharing the load.

(h) Off/storage-secured mode. Manually select the off/storage-secured mode and verify that the storage does not discharge and all compressors are off, regardless of the presence of calls for cooling. If scheduled, input the time interval that would result in off/storage-secured mode and verify that the storage does not discharge and all compressors are off, regardless of the presence of calls for cooling.

(i) Charge plus cool mode. If provisions for this mode have been made by the system designer, verify that the tank(s) can be charged while serving an active cooling load, simulated by generating a call for cooling and entering the charge mode either manually or by time schedule. If the system disallows this mode of operation, verify that the energy storage is disallowed or discontinued while an active cooling load is present.

NA7.5.15 Supply Air Temperature Reset Controls

The following acceptance tests apply to supply air temperature reset controls.

NA7.5.15.1 Construction Inspection

Prior to functional testing, verify and document the following:

(a) Supply air temperature reset controls are installed as specified by the requirements of the Section 140.4(f).

(b) All system air temperature sensors are factory or field calibrated within 2% of a calibrated reference temperature sensor. Attach a copy of the calibration certificate or field verification results.

(c) Document current supply air temperature.

NA7.5.15.2 Functional Testing

(a) Check to make sure that chilled and hot water coils, if used, are not already fully open and calling for maximum cooling/heating. If this is the case, reverse Steps 1 and 2 and/or change the setpoint range as necessary to conduct this test.

(b) Identify the reset controller parameter.

Step 1: During occupied mode, adjust the reset control parameter to decrease the supply air temperature (to the lower supply temperature limit). Verify and document the following:

(a) Supply air temperature controls modulate as intended.

(b) Actual supply air temperature decreases to meet the new setpoint within ±2ºF.

(c) Supply air temperature stabilizes within 15 minutes.

Step 2: During occupied mode, adjust the reset control parameter to increase the supply air temperature (to the upper supply temperature limit). Verify and document the following:

(a) Supply air temperature controls modulate as intended.

(b) Actual supply air temperature increases to meet the new setpoint within ±2ºF.

(c) Supply air temperature stabilizes within 15 minutes.

Step 3: Restore reset control parameter to automatic control. Verify and document the following:

(a) Supply air temperature controls modulate as intended.

(b) Actual supply air temperature changes to meet the new setpoint within ±2ºF.

(c) Supply air temperature stabilizes within 15 minutes.

NA7.5.16 Condenser Water Supply Temperature Reset Controls

The following acceptance tests apply to condenser water temperature reset controls.

NA7.5.16.1 Construction Inspection

Prior to functional testing, verify and document the following:

(a) Condenser water supply system, control system, and temperature control sequence, including condenser water supply high and low limits, are available and documented in the building documents.

(b) Cooling tower fan motors are operational, and cooling tower fan speed controls (e.g. VSDs) are installed, operational, and connected to cooling tower fan motors as specified by Original Equipment Manufacturer (OEM) start-up manuals and sequence of operation.

(c) Cooling tower fan control sequence, including tower design wetbulb temperature and approach, is available and documented in the building documents.

(d) The following temperature sensors are installed as specified by the plans: outdoor air dry-bulb, outdoor air wet-bulb, entering condenser water, and leaving chilled water. Note any discrepancies.

(e) All ambient dry bulb temperature, relative humidity, and pressure sensors used by controller are factory calibrated within 2% of a calibrated reference sensor. Attach a copy of calibration certificate or field verification results.

(f) Document the current outdoor air dry bulb and wet bulb temperatures, entering condenser water temperature, and leaving chilled water temperature readings from the control system.

NA7.5.16.2 Functional Testing

(a) The system cooling load must be sufficiently high to run the test. If necessary, artificially increase the evaporator load to perform the functional tests, or wait until a time of stable chiller operation. If necessary, reverse Steps 1 and 2 in the test based on atmospheric conditions and buildings loads.

(b) If testing in cold ambient conditions, ensure that freeze protection controls are installed and functional to prevent equipment damage.

(c) If the actual control sequence differs significantly from that implied by the tests and/or has already been tested during the building commissioning process, attach a description of the control sequence, a description of the tests that were done to verify the system operates according to the sequence, the test results, and a plot of associated trend data.

(d) Identify the reset control parameter.

Step 1: Adjust the reset control parameter to decrease the condenser water supply temperature toward the lower supply temperature limit. Allow time for the system to stabilize. Verify and document the following:

(a) Condenser water supply temperature controls modulate as intended.

(b) Actual condenser water supply temperature decreases to meet the new setpoint within ±2ºF.

(c) Cooling tower fan(s) stage properly and/or adjust speed accordingly to meet higher setpoint.

(d) Chiller load amperage decrease.

Step 2: Adjust the reset control parameter to increase the condenser water supply temperature toward the upper supply temperature limit.

Verify and document the following:

(e) Condenser water supply temperature controls modulate as intended.

(f) Actual condenser water supply temperature increases to meet the new setpoint within ±2ºF.

(g) Cooling tower fan(s) stage properly and/or adjust speed accordingly to meet the lower setpoint.

(h) Chiller load amperage increase.

Step 3: Restore reset control parameter to automatic control. Verify and document the following:

(i) Condenser water supply temperature controls modulate as intended.

(j) Actual condenser water supply temperature changes to meet the new setpoint.

(k) Cooling tower fan(s) and chiller(s) stage properly and/or adjust speed accordingly to return to normal operation and meet the setpoint.

NA7.5.17 Occupied Standby

NA7.5.17.1 Construction Inspection

Prior to Functional Testing, verify and document the following:

(a) Confirm that all spaces served by the zone are eligible to be in occupied standby mode as specified in Section §120.2(e)3.

(b) Verify that the occupant sensor is placed so that it can detect occupants in the space without obstruction. Repeat for all spaces served by the zone.

(c) Confirm that the mechanical system is controlled by an independent signal if the occupant sensor also controls the lighting.

NA7.5.17.2 Functional Testing

Step 1: Put the zone in occupied mode (i.e., adjust the occupancy schedule)

Step 2: Physically occupy the space and confirm that the occupant sensor detect the presence of an occupant in the zone.

Step 3: Adjust the thermostatic control so that the space temperature is within the deadband.

Step 4: Confirm that the zone is supplied with minimum ventilation.

Step 5: Adjust setpoint outside of occupied heating/cooling deadband but inside the occupied standby deadband. Confirm the zone is in heating or cooling mode.

Step 6: Physically vacate all spaces served by the zone.

Step 7: For space conditioning systems that also provide ventilation to the zone, confirm that within 5 minutes of occupant sensing controls indicating that the zone is unoccupied the setpoint is setup or setback and the zone is within the occupied standby deadband. Occupant sensing controls may have a time delay of up to 20 minutes before indicating the space is unoccupied and occupant sensing zone controls may allow up to an additional 5 minute time delay after occupant sensing

controls have indicated all rooms served by the zone are unoccupied before resetting zone temperature setpoints and shutting off zone ventilation air).

Step 8: Confirm that no ventilation is being supplied to the space with the occupant sensor.

Step 9: Put the zone in pre-occupancy ventilation mode (i.e. adjust the occupancy schedule to one hour prior to normal scheduled occupancy).

Step 10: Physically vacate all spaces served by the zone.

Step 11: Confirm that within 5 minutes of occupant sensing controls indicating that all spaces served by the zone are unoccupied, the zone is supplied with pre-occupancy ventilation rate of Section 120.1(d)2: either the minimum rate of outdoor air required by Section 120.1(c) or three complete air changes is supplied to the zone during the one hour period immediately before the zone is scheduled to be occupied. (See Step 7 concerning maximum occupant sensing control time delay).

Step 12: Occupy a space served by the zone during the one hour immediately prior to scheduled occupancy. Confirm that the zone is supplied with pre-occupancy ventilation rate of Section 120.1(d)2.

Step 13: Restore the system to normal operation.

NA7.6 Indoor Lighting Controls Acceptance Tests

NA7.6.1 Automatic Daylighting Controls Acceptance Tests

NA7.6.1.1 Construction Inspection

Prior to Functional testing, verify and document the following:

(a) The daylit zones are shown on plans documents.

(b) The general lighting in skylit daylit zones, primary sidelit daylit zones and secondary sidelit daylit zones is controlled by automatic daylighting controls. In parking garages, the general lighting in the combined primary and secondary sidelit daylit zones is controlled by automatic daylighting controls.

(c) The automatic daylighting controls provide separate control for luminaires in each type of daylit zone. General lighting in overlapping skylit daylit zone and a sidelit daylit zone are controlled as part of the skylit zone. General lighting in both a primary sidelit daylit zone and secondary sidelit daylit zone are controlled as part of the primary sidelit daylit zone.

(d) All photosensors are not readily accessible to unauthorized personnel.

NA7.6.1.2 Functional Testing - Sampling

All photocontrols serving more than 5,000 ft² of daylit area shall undergo functional testing. Photocontrols that are serving smaller spaces may be sampled as follows:

For buildings with up to five (5) photocontrols, all photocontrols shall be tested. For buildings with more than five (5) photocontrols, sampling may be done on spaces with similar sensors and cardinal orientations of glazing; sampling shall include a minimum of one (1) photocontrol for each group of up to five (5) additional photocontrols. If the first photocontrol in the sample group passes the functional test, the remaining photocontrols in the sample group also pass. If the first photocontrol in the sample group fails the functional test, the rest of the photocontrols in the group shall be tested. If any tested photocontrol fails the functional test, it shall be repaired, replaced or adjusted until it passes the test.

For each photocontrol to be tested, test each group of lights controlled separately by the photocontrol according to the protocol in NA7.6.1.4 and NA7.6.1.5. In all interior spaces other than parking garages, separate tests are conducted for daylighting control of the primary sidelit daylit zone and for daylight control of the secondary sidelit daylit zone. In parking garages, the tests are conducted on daylighting controls that control the combined area of the primary and secondary sidelit daylit zone.

NA7.6.1.3 RESERVED

NA7.6.1.4 Continuous Dimming Control Systems Functional Testing

Continuous dimming control systems provide more than 10 levels of controlled light output per zone.

(a) **Reference Location**. Identify the minimum daylight~~ing~~ location in the controlled zone (Reference Location) for each daylit zone type (skylit, primary sidelit, and secondary sidelit) in the space. This can be identified using either the illuminance method or the distance method and will be used for illuminance measurements in subsequent tests. For parking garages, the reference location should always be the farthest edge of the secondary sidelit daylit zone away from the opening or glazing.

Illuminance Method

The Reference Location is the task location with lowest daylight illuminance in the zone illuminated by controlled luminaires.

Turn off controlled lighting and measure daylight illuminance within zones illuminated by controlled luminaires. (Note: turn the controlled lighting back on before proceeding to the No Daylight Test)

Distance Method

The Reference Location is the task location within the zone illuminated by controlled luminaires that is farthest away from daylight sources.

(b) No Daylight Test. Simulate or provide conditions without daylight. Verify and document the following:

1. Document the reference illuminance at the Reference Location, which is the electric lighting illuminance level at the Reference Location.
2. Automatic daylight control system turns on all controlled lighting to full light output (full design output, or full programmed output) unless it has been documented, such as in design documents, that continuous dimming luminaires have been intentionally tuned to less than full light output.
3. Light output is stable with no visible flicker.

(c) **Full Daylight Test**. Simulate or provide bright conditions where the daylight illuminance is greater than 150 percent of the reference illuminance (measured during the No Daylight Test). Alternatively, provide simulated bright conditions by shining a bright light into the daylight sensor. Verify and document the following:

1. The controlled lighting power reduction is at least 90 percent under fully dimmed conditions for non-parking garage locations. For parking garages, the controlled lighting power reduction is 100 percent under fully dimmed conditions.
2. Only luminaires in daylit zones are affected by daylight control. If the daylighting control system controls luminaires outside of the daylight zones including those behind obstructions, the control system is not compliant.
3. If a Power Adjustment Factor (PAF) is claimed for daylight continuous dimming plus off controls in accordance with Section 140.6(a)2H; a compliant system shall automatically turn off the luminaires in order to pass the Full Daylight Test for daylight continuous dimming plus off controls. This portion of the Full Daylight Test does not

apply to lighting systems that are not claiming a PAF for daylight continuous dimming plus off controls.

(d) **Partial Daylight Test**. Simulate or provide daylight conditions where illuminance provided only by daylight only at the Reference Location is between 60 and 95 percent of Reference Illuminance measured during the No Daylight Test. Verify and document the following:

1. Measure that the combined daylight and controlled electric lighting illuminance at the Reference Location is no less than the reference illuminance measured at this location during the No Daylight Test.
2. Verify that the combined daylight and controlled electric lighting illuminance at the Reference Location is no greater than 150 percent of the reference illuminance.
3. Light output is stable with no visible flicker.

   (Note: only luminaires in daylit zones are affected by daylight control)

(e) **Alternate Partial Daylight Test**. When outdoor horizontal illuminance is at least 4,000 fc and where illuminance from daylight only at the Reference Location (Partial Daylight Illuminance) is no greater than 80 percent of Reference Illuminance measured at this location during the No Daylight Test. Measure the outdoor horizontal illuminance level and the daylight illuminance level, and do not proceed until the aforementioned illuminance criteria are met.

Verify and document the following:

1. Measure the Partial Daylight Illuminance at the Reference Location. This can be measured by turning the electric lighting off. (Turn the electric lighting back on before proceeding to next step.)
2. Measure the combined daylight and controlled electric lighting at the Reference Location.
3. This alternate partial daylight test is passed if the measured illuminance value (from Step 2) is no less than the Reference Illuminance measured at this location during the no daylight test and no greater than Partial Daylight Combined Illuminance Maximum (PDCIM).

   In other words, the measured value must be within the following range in order to pass this test.

   Reference Illuminance (from the no daylight test) ≤ measured illuminance value (from Step 2) ≤ PDCIM,

   where PDCIM = Reference Illuminance (from the no daylight test) + 0.40 x Daylight Illuminance (from Step 1)

4. *Light output is stable with no visible flicker.*
5. *Only luminaires in daylit zones are affected by daylight control.*

NA7.6.1.5 Stepped Switching or Stepped Dimming Control Systems Functional Testing

Stepped switching or stepped dimming control systems provide no more than 10 discrete steps of control of light output.

(a) **Reference Location**. Identify the minimum daylight location in the controlled zone (Reference Location) for each daylit zone type (skylit, primary sidelit, and secondary sidelit) in the space. This can be identified using either the illuminance method or the distance method and will be used for illuminance measurements in subsequent tests. For parking garages, the reference location should always be the farthest edge of the secondary sidelit daylit zone away from the opening or glazing.

Illuminance Method

The Reference Location is the task location with lowest daylight illuminance in the zone illuminated by controlled luminaires.

Turn off controlled lighting and measure daylight illuminance within zones illuminated by controlled luminaires. (Note: turn the controlled lighting back on before proceeding to the No Daylight Test)

Distance Method

The Reference Location is the task location within the zone illuminated by controlled luminaires that is farthest away from daylight sources

(b) **No daylight test**. Simulate or provide conditions without daylight. Verify and document the following:

1. Document the reference illuminance, which is the electric lighting illuminance level at the Reference Location.
2. Automatic daylight control system turns on all stages of controlled lighting to full light output unless it has been documented, such as in design documents, that dimming luminaires have been intentionally tuned to less than full light output. 6.4.
3. Light output is stable with no visible flicker.

(c) **Full daylight test**. Simulate or provide bright conditions where the daylight illuminance is greater than 150 percent of the reference illuminance (measured during the No Daylight Test). Alternatively, provide simulated bright conditions by shining a bright light into the daylight sensor. Verify and document the following:

1. When daylight illuminance is greater than 150 percent of the design illuminance, lighting power reduction is at least 90 percent under fully dimmed conditions for non-parking garage locations. For parking garages, the lighting power reduction is 100 percent under fully dimmed conditions
2. RESERVED
3. Only luminaires in daylit zones are affected by daylight control. If the daylighting control system controls luminaires outside of the daylight zones including those behind obstructions, the control system is not compliant.

(d) **Partial daylight test**. If the control system has one (1) to three (3) steps of control between on and off, test all control steps between on and off. If the control system has more than three (3) steps between on and off, testing three (3) control steps between on and off is sufficient to demonstrate compliance. If the control system has zero (0) steps between on and off, the partial daylight test is not necessary. For stepped switching control systems, steps in a controlled zone are achieved by turning some luminaires or groups of luminaires on or off without any steps between on and off.

For each control stage that is tested in this step, the control stages with lower setpoints than the stage tested are left ON and those stages of control with higher setpoints are dimmed or controlled off. Simulate or provide conditions so that each control stage turns on and off or dims. Verify and document the following for each control stage:

1. Measure that the combined daylight and controlled electric lighting illuminance at the Reference Location is no less than the reference illuminance measured at this location during the No Daylight Test.
2. Verify that the combined daylight and controlled electric lighting illuminance at the Reference Location is no greater than 150 percent of the reference illuminance.
3. Light output is stable with no visible flicker. (Note: only luminaires in daylit zones are affected by daylight control)
4. The control stage shall not cycle on and off or cycle between dim and undimmed while daylight illuminance remains constant.

NA7.6.2 Shut-off Controls Acceptance Tests

NA7.6.2.1 Occupant Sensing Lighting Controls Construction Inspection

Prior to Functional testing, verify and document the following:

(a) The occupant sensing lighting controls are shown on plan documents and are installed.

(b) Occupant sensing lighting control is installed per manufacturer's instructions to minimize false triggering- such as to install an occupancy sensor away from HVAC diffusers to avoid probable false triggering.

NA7.6.2.2 Occupant Sensing Lighting Controls Functional Testing - Sampling

For buildings with up to seven (7) occupant sensors, all occupant sensors shall be tested. For buildings with more than seven (7) occupant sensors, sampling may be done on spaces with similar sensors and space geometries; sampling shall include a minimum of 1 occupant sensor for each group of up to 7 additional occupant sensors. If the first occupant sensor in the sample group passes the acceptance test, the remaining building spaces in the sample group also pass. If the first occupant sensor in the sample group fails the acceptance test the rest of the occupant sensors in that group must be tested. If any tested occupant sensor fails it shall be repaired, replaced or adjusted until it passes the test.

For buildings with up to seven multi-zone occupant sensors, all occupant sensors shall be tested. For buildings with more than seven multi-zone occupant sensors, sampling may be done on the space to choose up seven multi-zone occupant sensors from the space and all seven multi-zone occupant sensors shall be tested.

NA7.6.2.3 Occupant Sensing Lighting Controls Functional Testing

This requirement applies to areas where occupant sensing controls are required to comply with Section 130.1(c) with the exception of Section 130.1(c)6D.

For each sensor to be tested do the following:

(a) **Unoccupied Test**. Simulate an unoccupied condition in the controlled space. Verify and document the following:

1. The occupant sensing control turn the controlled lighting off or partially-off in 20 minutes or less from the start of an unoccupied condition. In addition:

    a. For partial-on occupant sensing controls, occupant sensing controls and vacancy sensing controls, the controlled lighting is turned off in unoccupied condition.

    b. In the partially off state, partial off occupant sensing controls automatically reduce lighting power by at least 50 percent, or automatically reduce in one of the following:

        i. For warehouses with metal halide or high pressure sodium lighting, reduce lighting power by at least 40 percent;

        ii. For aisle ways and open areas in warehouses in which the installed lighting power is 80 percent or less of the value allowed under the Area Category Method, reduce lighting power by at least 40 percent;

        iii. For corridors and stairwells that provide access to guestrooms and dwelling units of high-rise residential buildings and hotel/motels in which the installed lighting power is 80 percent or less of the valued allowed under the Area Category Method, reduce lighting power by at least 40 percent.

    c. For occupant sensing controls in parking garages, parking areas, and loading and unloading areas, the control has at least one control step between 20 to 50 percent of the design lighting power, or the controls has at least one control step between 20 to 60 percent of the design lighting power - for the controls serving metal halide luminaires with a lamp plus ballast mean system efficacy of 75 lumens per watt. In the partially off state, partial off occupant sensing controls automatically reduce lighting power by one control step.

(b) **Occupied Test.** Simulate an occupied condition in the controlled space. Verify and document the following:

1. Status indicator or annunciator operates correctly.

2. Immediately upon an occupied condition:

a. The occupant sensing control or partial off occupant sensing control turns on controlled lighting; or

b. The vacancy sensing control indicate a space is occupied and the controlled lighting can be turned on manually; or

c. The partial-on occupant sensing control automatically turns on the controlled lighting at between 50 to 70 percent of controlled lighting power. After the partial-on stage, manual switches can be activated to turn on the controlled lighting at full controlled lighting power.

NA7.6.2.4 Multi-Zone Occupant Sensing Lighting Controls Functional Testing

This requirement applies to areas where multi-zone occupant sensing controls are required to comply with Section 130.1(c)6D for offices larger than 250 square feet.

(a) **Occupied Control Zone Test**. Simulate an occupied condition in the control zone controlled by the occupant sensor. Verify and document the following:

1. Simulate an occupancy in a control zone. Immediately upon occupancy of the control zone, the occupant sensors turn on controlled lighting.
2. Measure the illuminance at a location in the control zone where the light output is from the controlled lighting at full light output.
3. Signal sensitivity is adequate to achieve desired control.
4. Status indicator or annunciator operates properly.

(b) **Unoccupied Control Zone Test.** In offices where two or more occupant sensors to create more than one control zones, simulate an unoccupied condition in the control zone controlled by the occupant sensor. Confirm that at least one other control zone within the office is occupied. Verify and document the following:

1. In 20 minutes or less from the start of the unoccupied condition in the control zone, the occupant sensor uniformly reduces light output of the controlled lighting.
2. Measure the illuminance at the same location as in Step (a). Verify that the light output during unoccupancy is no more than 20 percent of the full light output measured in Step (a)1.
3. The occupant sensing control does not trigger a false on from movement outside of the control zone or from HVAC operation.

   (Informational note: The field of view of occupant sensors in the adjacent control zones in offices greater than 250 square feet may overlap, but the field of view should stay away from an adjacent enclosed spaces that is not part of the large office, like conference rooms, and private offices.)
4. Signal sensitivity is adequate to achieve desired control.

(c) Control Zone Size Test**.** Follow the procedures described in either Method 1 or Method 2 below.

Method 1: Simulate an unoccupied condition in the control zone controlled by the occupant sensor while standing in an adjacent control zone. Determine the "edge" of the control zone controlled by the occupant sensor by moving toward the occupant sensor until the lights controlled by the occupant sensor turn on as in Step (a) – to simulate an occupied condition for that control zone. Measure, determine and document the following:

1. Measure the distance (in feet) from the "edge" of the control zone to the spot that is directly below the occupant sensor. This is the radius of the control zone.
2. Determine the area of the control zone by using the formula: Area = π*radius2.
3. The area of the control zone must be less than or equal to 600 square feet.

Method 2: Simulate an unoccupied condition for the entire office space. Verify and document the following:

1. Walk thru the space and count the number of zones of lighting turned on automatically as walking thru the space.
2. Document the number of zones being turned on. Determine the size of the office in square footage from construction plans or from other information source.
3. Divide the size of the office by the number of zones. This calculated value is the assessed control zone size (in square feet).
4. If the value is less than or equal to 600 square feet, it passes the test. Otherwise, it fails the test.

(d) Unoccupied Office Test. Simulate an unoccupied condition in all control zones controlled by all occupant sensors in the office. Verify and document the following:

In 20 minutes or less from the start of the unoccupied condition of the entire office, all general lighting in the office shall turn off.

NA7.6.2.5 Automatic Time Switch Lighting Controls Construction Inspection

Prior to Functional testing, verify and document the following:

(a) The automatic time switch controls are shown on plan documents and are installed.

(b) Automatic time switch control is programmed with acceptable weekday, weekend, and holiday (if applicable) schedules.

(c) Document for the automatic time switch programming including weekday, weekend, holiday schedules as well as all set-up and preference program settings.

(d) The correct time and date is properly set in the time switch.

(e) The battery back-up (if applicable) is installed and energized.

(f) Manual override time limit is set to no more than 2 hours.

(g) Manual override switches located remotely from area with controlled luminaires allow the user to see the controlled luminaires or have a visual signal or display showing the current state of the controlled luminaires.

NA7.6.2.6 Automatic Time Switch Lighting Controls Functional Testing

(a) Occupied Test. Simulate an occupied condition in the controlled space. Verify and document the following:

1. The automatic time switch control turns the controlled lighting.
2. Reserved

(b) Unoccupied Test. Simulate an unoccupied condition in the controlled space. Verify and document the following:

1. The automatic time switch control turns off all controlled lighting.
2. During test, for the area controlled by an automatic time-switch control with a configured automatic holiday shut-OFF, the controlled lighting can be turned off automatically by the holiday shut-OFF. For exempt areas, the lighting is not required to be configured with automatic holiday shut-OFF.
3. For the area controlled by an automatic time-switch control with a time-override located in and for the area, verify the lighting can be turned on manually by initiating the time-override and the lighting is configured to remain ON for no more than 2 hours. For exempt areas, the lighting can be configured to remain ON for more than 2 hours and until the next scheduled shut off occurs.

NA7.6.3 Demand Responsive Controls Acceptance Tests

NA7.6.3.1 Construction Inspection

Prior to Functional testing, verify and document the following:

(a) The demand responsive control is setup to communicate in one of the following communication protocols: Wi-Fi, ZigBee, BACnet, Ethernet or other wired or wireless bi-directional communication pathway. (requirements of Section 110.12). The demand responsive controls is setup to communicate for the functional testing of NA7.6.3.2.

NA7.6.3.2 Functional Testing

There are three methods to verify the reduction in lighting power due to the demand responsive lighting controls. For methods 1 and 2, buildings with up to seven (7) enclosed spaces requiring demand responsive lighting controls, all spaces shall be tested. For buildings with more than seven (7) enclosed spaces requiring demand responsive lighting controls, sampling may be done on additional spaces with similar lighting systems; sampling shall include a minimum of 1 enclosed space for each group of up to 7 additional enclosed spaces. If the first enclosed space with a demand responsive lighting control in the sample group passes the acceptance test, the remaining building spaces in the sample group also pass. If the first enclosed space with a demand responsive lighting control in the sample group fails the acceptance test the rest of the enclosed spaces in that group must be tested. If any tested demand responsive lighting control system fails it shall be repaired, replaced or adjusted until it passes the test. Method 3 tests the

entire facility at once, does not require sampling, but requires the facility lighting to be disaggregated from other end-use loads.

Test the reduction in lighting power due to the demand responsive lighting control using one of the following three methods.

NA7.6.3.2.1 Method 1: Illuminance Measurement.

Measure the reduction in illuminance in enclosed spaces required to meet Section 110.12(c), as follows:

(a) In each space, select one location for illuminance measurement. The preferred measurement location is not in a skylit or primary sidelit area so that the illuminance meter is not in direct view of window or skylight. If this is not possible, perform the test at a time and location at which daylight illuminance provides less than half of the design illuminance. Mark each location to ensure that the illuminance meter can be accurately located.

(b) Full output test

1. Using the manual switches/dimmers in each space, set the lighting system to full output. Note that for lighting system that has been task tuned, override the controls to allow the lighting system to go to full output. Note also that the lighting in areas with photocontrols or occupant vacancy sensors may be at less than full output, or may be off.
2. Take one illuminance measurement at each location, using an illuminance meter.
3. Simulate a demand response condition using the demand responsive control.
4. Take one illuminance measurement at each location with the electric lighting system in the demand response condition.
5. Calculate the area-weighted average reduction in illuminance in the demand response condition, compared with the full output condition. The area-weighted reduction must be at least 15%.

(c) Minimum output test

1. Determine illuminance at minimum output condition:
   i. Using the manual switches/dimmers in each space, set the lighting system to minimum output (but not off). Note that the lighting in areas with photocontrols or occupant vacancy sensors may be at more than minimum output, or may be off.
   ii. Take one illuminance measurement at each location, using an illuminance meter.
2. Determine illuminance at demand response condition:
   i. Simulate a demand response condition using the demand responsive control.

ii. Take one illuminance measurement at each location with the electric lighting system in the demand response condition.

3. Determine compliance:

   i. In each space, the illuminance in the demand response condition must not be less than the illuminance in the minimum output condition (but not turned off).

   EXCEPTION: In daylit spaces, the illuminance in the demand response condition may reduce below the minimum output condition.

NA7.6.3.2.2 Method 2: Current measurement.

Measure the reduction in electrical current in spaces required to meet Section 110.12, as follows:

(a) At the lighting circuit panel, select at least one lighting circuit that serves spaces required to meet Section 110.12.

(b) Full output test

1. Using the manual switches/dimmers in each space, set the lighting system to full output. Note that the lighting in areas with photocontrols or occupant vacancy sensors may be at less than full output, or may be off.
2. Take one electric current measurement for each selected circuit.
3. Simulate a demand response condition using the demand responsive control.
4. Take one illuminance measurement at each location with the electric lighting system in the demand response condition.
5. Add together all the circuit currents, and calculate the reduction in current in the demand response condition, compared with the full output condition. The combined reduction must be at least 15%.

(c) Minimum output test

1. Using the manual switches/dimmers in each space, set the lighting system to minimum output (but not off). Note that the lighting in areas with photocontrols or occupant vacancy sensors may be at more than minimum output, or may be off.
2. Take one electric current measurement for each selected circuit.
3. Simulate a demand response condition using the demand responsive control.
4. Take one electric current measurement for each selected circuit with the electric lighting system in the demand response condition.
5. In each space, the electric current in the demand response condition must not be less than the electric current in the minimum output condition.

   EXCEPTION: Circuits that supply power to the daylit portion of enclosed spaces as long as lighting in non-daylit portions of the enclosed space.

NA7.6.3.2.3 Method 3: Full facility current measurement.

Measure the reduction in electrical current of the full facility on the lighting end-use disaggregated circuit for spaces that are required to meet Section 110.12, as follows:

(a) At the circuit panel, select the circuit that serves the lighting load of the entire facility.

(b) Full output test

1. Using the facility lighting controls, set the lighting system to full output. Note that the lighting in areas with photocontrols or occupant /vacancy sensors may be at less than full output or may be off.
2. Take one electric current measurement on the circuit. This is your pre-event current.
3. Simulate a demand response condition using the demand responsive control.
4. Take one electric current measurement on the circuit. This is your post-event current.
5. Calculate the difference between the pre-event current and the post-event current to determine your wattage reduction.
6. Divide the wattage reduction by the total design wattage of lighting required to meet Section 110.12. The percent reduction in wattage must be at least 15%.

(c) Minimum output test

1. Using the facility controls, set the lighting system to minimum output (but not off). Note that the lighting in areas with photocontrols or occupant /vacancy sensors may be at more than minimum output or may be off.
2. Take one electric current measurement on the circuit. This is your pre-event current.
3. Simulate a demand response condition using the demand responsive control.
4. Take one electric current measurement on the circuit. This is you post event current.
5. The post-event current must not be less than the pre-event current in the minimum output condition.

NA7.6.4 Institutional Tuning Power Adjustment Factor (PAF) Acceptance Tests

For buildings with up to seven (7) enclosed areas claiming the institutional tuning PAF (power adjustment factor), all areas shall be tested. For buildings with more than seven (7) areas claiming this PAF, random sampling may be done on seven of the larger enclosed areas with tuned dimming systems. If any of the areas in the sample group of seven areas fails the acceptance test, another group of seven areas must be tested. If any tested system fails, it shall be tuned until it passes the test.

NA7.6.4.1 Construction Inspection

Prior to functional testing, verify and document the following:

(a) The construction documents specify which lighting systems shall have their maximum light output or maximum power draw set to no greater than 85 percent of full light output or full power draw.

(b) The controls or the methods of controlling the maximum output of luminaires is such that the maximum light output of the controlled lighting system can be limited and that normal operation of the controlled lighting does not override the maximum light output.

(c) The controls are not readily accessible to unauthorized personnel.

NA7.6.4.2 Functional Testing

For each area to be tested, follow the procedures in Method 1 or Method 2 below:

(a) The acceptance test technician shall either observe the first seven (7) systems being successfully tuned or shall verify systems that have already been tuned using the sampling protocol described in NA7.6.4.

(b) If the acceptance test technician is observing the tuning of the system, the party responsible for the tuning shall certify that the remainder of the system is tuned in a similar manner.

NA7.6.4.2.1 Method 1: Observation of the Systems During Institutional Tuning

Step 1: Determination of maximum power or light output prior to institutional tuning

(a) Set all lighting controls to provide maximum output of the tested system without applying the limits specified for institutional tuning.

(b) Measure the full light output at a location where the illuminance is due to the controlled lighting, or measure the power draw of the controlled lighting. Current measurements may be used instead of power measurements.

Step 2: Institutional Tuning and Post-tuning Measurement

(a) Apply the limits specified for institutional tuning to the lighting system. Do not alter any other control settings.

(b) Verify the light or power reduction after institutional tuning by measuring the light output at the same location as in Step 1 or measure the power draw of the same circuit as in Step 1. Current measurements may be used instead of power measurements.

(c) If the light output or power draw measured in Step 2(b) is 85% or less of the light output or power draw measured in Step 1(b), the system passes this test; otherwise the system fails this test.

NA7.6.4.2.2 Method 2: Verification of Systems Already Tuned

Step 1: Measurement of tuned lighting system

(a) Set all lighting controls except institutional tuning controls to provide maximum output of tested system. Controls set to maximum light output include but not limited to: manual dimmers, multilevel occupant sensing, and automatic daylighting controls.

(b) Measure full light output at location where most of the illuminance is due to the controlled lighting or measure power draw of the controlled lighting. Current measurements may be used instead of power measurements.

Step 2: Measurement of lighting system with institutional tuning overriden

(a) Reset institutional tuning controls to allow full light output. Set all lighting controls to provide maximum output of tested system including but not limited to: institution tuning control, manual dimmers, multilevel occupant sensing, and automatic daylighting controls.

(b) Measure full light output at the same location as in Step 1 or measure the power draw of the same circuit as in Step 1. Current measurements may be used instead of power measurements.

(c) If the light output or power draw measured in Step 1(b) is 85% or less of the light output or power draw measured in Step 2(b), the system passes this test; otherwise the system fails this test.

Step 3: Restore Institutional Tuning settings

(a) If the tested system passed the test in Step 2, restore the institutional tuning settings.

NA7.6.5 Demand Responsive Controls – Controlled Receptacles

NA7.6.5.1 Construction Inspection

Prior to functional testing, verify and document the following:

(a) That the demand responsive control is capable of receiving a demand response signal directly or indirectly through another device and that it complies with the requirements in Section 110.12.

(b) If the demand response signal is received from another device (such as an EMCS), that system must itself be capable of receiving a demand response signal from a utility meter or other external source.

(c) Verify that demand responsive controlled receptacles are installed.

(d) Verify if the receptacle has a permanent and durable marking for controlled receptacles or circuits to differentiate them from uncontrolled receptacles or circuits.

(e) Verify the receptacle is controlled by an automatic shut-off control.

NA7.6.5.2 Functional Test

NA7.6.5.2.1

For buildings with up to seven (7) enclosed spaces requiring demand responsive controlled receptacles, an Acceptance Test Technician shall test all spaces.

For buildings with more than seven (7) enclosed spaces requiring demand responsive lighting controls:

1. An Acceptance Test Technician may either:
    a. test all of the spaces; or
    b. test seven spaces and sample the additional spaces; with each sample to include a minimum of 1 enclosed space for each sample group of up to 7 additional enclosed spaces.
2. If the first enclosed space with a demand responsive controlled receptacle in a sample group passes the acceptance test, the remaining building spaces in the sample group also pass. If the first enclosed space with a demand responsive controlled receptacle in the sample group fails, the Acceptance Test Technician shall test rest of the enclosed spaces in that group.

NA7.6.5.2.2

If any tested demand responsive controlled receptacle fails, it shall be repaired, replaced or adjusted until it passes the test.

NA7.6.5.2.3

The acceptance test for each demand responsive controlled receptacle includes testing the reduction in receptacle power due to the demand responsive control using both of the following methods:

ON Test

1. Trigger the shut off control to turn the demand responsive controlled receptacle ON, or if the receptacle has a manual control turn the receptacle ON.
2. Verify each controlled outlet has full voltage (125 V) present.
3. Simulate a DR condition.
4. Verify at each controlled outlet that zero voltage (0 V) is present (deenergized).
5. Verify the controlled receptacle cannot be overridden to turn ON by the automatic shut-off controls or any manual control.
6. Simulate a normal condition (non-DR condition).
7. Verify each controlled outlet has full voltage (125 V) present.

OFF Test

1. Trigger the automatic shut-off control to turn the demand responsive controlled receptacle OFF or if the receptacle has an ON/OFF button, manually turn the receptacle OFF.
2. Verify at each controlled outlet that zero voltage (0 V) is present (deenergized).
3. Simulate a DR condition.
4. Verify at each controlled outlet that zero voltage (0 V) is present (deenergized).
5. Verify that the demand responsive controlled receptacle cannot be overridden to turn ON by automatic shut-off controls or any manual control.
6. Simulate a normal condition (non-DR condition).
7. Verify each controlled outlet has zero voltage (0 V) present.

NA7.7 Indoor Lighting Controls Installation Verifications

NA7.7.1 Lighting Control Systems Installed to Comply with Section 110.9(b)

NA7.7.1.1 Installation Inspection

If a lighting control required by Title 24, Part 6 is a field assembled system consisting of two or more components, verify the system components meet all of the requirements for each lighting control type, in accordance with Section 110.9, On the approved installation compliance form, identify, list, and verify each type of lighting control system as follows:

(a) Separately identify and list each type of lighting control system. When there are identical lighting control systems in a single building, identical lighting control system may be listed together.

(b) Identify and list all requirements for the type of self-contained lighting control device for which the lighting control system is installed to function as, in accordance with Section 110.9 and in accordance with the Title 20 Appliance Efficiency Regulations.

(c) Verify the lighting control system complies with all of the applicable requirement as listed.

(d) If the lighting control system does not meet all applicable requirements, the installation fails.

NA7.7.2 Energy Management Control System (EMCS) Installed in Accordance with Section 130.0(e)

NA7.7.2.1 Installation Inspection

(a) The EMCS shall be separately tested for each respective lighting control system for which it is installed to function as.

(b) List and verify functional compliance with all applicable requirements in accordance with applicable Sections 110.9, 130.1, 130.2 and Section 160.5.

(c) If applicable, list and verify functional compliance with all applicable requirements for all applications for which the EMCS is installed to function as, in accordance with appliable Section 140.6 and 170.2(e)2 thru 4.

(d) If applicable, list and verify functional compliance with all applicable requirements for all applications for which the EMCS is installed to function as, in accordance with applicable Section 140.7 and 170.2(e)6.

(e) If applicable, list and verify functional compliance with all applicable requirements for all applications for which the EMCS is installed to function as, in accordance with applicable Section 150(k) and 160.5(a).

NA7.7.3 RESERVED

NA7.7.4 Interlocked Lighting Systems Serving an Area in Accordance with Section 140.6(a)1 and 170.2(e)2A

NA7.7.4.1 Installation Inspection

Verify and document the following:

(a) The space qualifies only as one or more the following types: Auditorium, convention center, conference room, multipurpose room, or theater, in accordance with the definitions of those space types in Section 100.1.

(b) There are no more than two interlocked lighting systems serving the space.

(c) The two lighting systems are interlocked with a non-programmable double throw switch to prevent simultaneous operation, in accordance with applicable Section 140.6(a)1 and 170.2(e)2A.

(d) If all of the above items are not true, the installation fails, and all connected lighting in the space shall be counted as part of the total installed lighting power.

NA7.7.5 Lighting Controls Installed to Earn a Power Adjustment Factor (PAF) in Accordance with Section 140.6(a)2 and 170.2(e)2B.

NA7.7.5.1 Construction Inspection for all PAFs except Institutional Tuning

Verify and document the following:

(a) Separately list all requirements for each PAF that is claimed in accordance with applicable Sections 110.9, and 140.6(a)2, Table 140.6-A, 170.2(e)2B, and Table 170.2-L.

(b) Verify the installation complies with all applicable requirements in accordance with applicable Sections 110.9, and 140.6(a)2, Table 140.6-A, 170.2(e)2B, and Table 170.2-L.

(c) If all of the above items are not true for a specific PAF, the installation fails, and that specific PAF cannot be used.

(d) For lighting systems that are claiming a PAF for daylight continuous dimming plus OFF control in accordance with Section 140.6(a)2H and 170.2(e)2Bviii, the system must successfully complete the functional performance test in Section NA 7.6.1.3, and in addition during the Full Daylight Test the controls shall automatically turn OFF the luminaires that are receiving the daylight continuous dimming plus OFF PAF credit.

NA7.7.6 Lighting for a Videoconferencing Studio in Accordance with Section 140.6(c)2Gvii

NA7.7.6.1 Installation Inspection

Verify and document the following:

(a) The videoconferencing studio is using only the Area Category Method for compliance. The extra lighting allowance shall not be taken when using the Complete Building Method or Tailored Method of compliance.

(b) The videoconferencing studio is a room with permanently installed videoconferencing cameras, audio equipment, and playback equipment for both audio-based and video-based two-way communication between local and remote sites.

(c) General lighting is switched in accordance with Table 130.1-A.

(d) Wall wash lighting is separately switched from the general lighting system.

(e) All of the lighting is controlled by a multiscene programmable control system (scene preset control system).

(f) If all of the above is not true, the installation fails, and the extra wattage for videoconferencing studio lighting cannot be used.

NA7.8 Outdoor Lighting Controls Acceptance Tests

NA7.8.1 Motion Sensing Controls Acceptance Tests

NA7.8.1.1 Construction Inspection

Prior to functional testing, verify and document the following:

(a) The motion sensing controls are shown on plan documents and are installed.

(b) Motion sensor is located to minimize false signals.

(c) Desired sensor coverage is not blocked by obstructions that could adversely affect performance.

NA7.8.1.2 Functional Testing

For building sites with up to seven (7) motion sensors, all motion sensors shall be tested. For sites with more than seven (7) motion sensors, sampling may be done on outdoor areas with similar sensors that cover similar unobstructed areas; sampling shall include a minimum of 1 motion sensor for each group of up to 7 additional motion sensors.

If the first sensor in the sample group passes the acceptance test, the remaining outdoor areas in the sample group also pass. If the first motion sensor in the sample group fails the acceptance

test, the rest of the sensors in that group shall be tested and any failed sensor in the sample group shall be repaired or replaced and retested until the sensor passes the test.

Step 1: Simulate motion in area under luminaire controlled by the motion sensor. Verify and document the following:

(a) Status indicator operates correctly.

(b) Luminaires controlled by sensors turn on immediately upon entry into the area lit by the controlled luminaires near the sensor.

(c) Signal sensitivity is adequate to achieve desired control.

Step 2: Simulate no motion in area with lighting controlled by the motion sensor.

Verify and document the following:

(a) The controlled luminaires are turned off or the lighting power of each controlled luminaire is reduced by at least 50 percent and no more than 90 percent within a maximum of 15 minutes from the start of an unoccupied condition.

(b) The sensor does not trigger a false "on" from movement outside of the controlled area.

(c) Signal sensitivity is adequate to achieve desired control.

NA7.8.2 Photocontrols Acceptance Tests

NA7.8.2.1 Construction Inspection

Verify and document the following:

The photocontrols are shown on plan documents and are installed.

NA7.8.2.2 Functional Testing

For building sites with up to seven (7) photosensors, all photosensors shall be tested. For sites with more than seven (7) photosensors, sampling may be done on outdoor areas with similar photosensors that cover similar unobstructed areas; sampling shall include a minimum of 1 photosensors for each group of up to 7 additional photosensors.

If the first photosensors in the sample group passes the acceptance test, the remaining outdoor areas in the sample group also pass. If the first photosensors in the sample group fails the acceptance test, the rest of the photosensors in that group shall be tested and any failed photosensors in the sample group shall be repaired or replaced and retested until the photosensors passes the test.

Verify and document the following:

(a) During daytime simulation, all controlled luminaires are turned off.

(b) During nighttime simulation, all controlled luminaires are turned on.

NA7.8.3 RESERVED

NA7.8.4 RESERVED

NA7.8.5 Automatic Scheduling Controls Acceptance Tests

NA7.8.5.1 Construction Inspection

Prior to functional testing, confirm and document the following:

(a) The automatic scheduling controls are shown on plan documents and are installed.

(b) The control is programmed with on schedules and off schedule that matches the schedules in the construction documents. If the schedule is unknown, confirm that the programmed schedule matches the default schedule where the off schedule is from midnight to 6am and the on schedule is all other night time hours, seven days per week.

(c) The lighting control programming including both on schedule and off schedule, for weekday, weekend, and holidays (if applicable).

(d) The correct time and date is properly set in the control.

NA7.8.5.2 Functional Testing

Verify and document the following:

(a) During daytime simulation, all controlled luminaires are turned off.

(b) During nighttime simulation with the programmed occupied period, all controlled luminaires are turned on.

(c) During nighttime simulation with the programmed unoccupied period, the controlled luminaires are turned off or the lighting power of controlled luminaires is reduced by at least 50 percent and no more than 90 percent.

NA7.9 RESERVED

NA7.10 Refrigerated Warehouse Refrigeration System Acceptance Tests

The measurement devices used to verify the refrigerated warehouse controls shall be calibrated once every two years using a NIST traceable reference. The calibrated measurement devices to be used in these acceptance tests are called the "standard" and shall have the following measurement tolerances: The temperature measurement devices shall be calibrated to +/- 0.7°F between -30°F and 200°F. The pressure measurement devices shall be calibrated to +/- 2.5 psi between 0 and 500 psig. The relative humidity (RH) measurement devices shall be calibrated to +/- 1% between 5% and 90% RH.

NA7.10.1 Electric Resistance Underslab Heating System

NA7.10.1.1 Construction Inspection

Prior to functional testing, verify and document the following for all electric resistance underslab heating systems:

(a) Verify that summer on-peak period is programmed into all underslab heater controls to meet the requirements of Section 120.6(a)2.

NA7.10.1.2 Functional Testing

Step 1: Using the control system, lower slab temperature setpoint. Verify and document the following using an electrical test meter:

(a) The underslab electric resistance heater is off.

Step 2: Using the control system, raise the slab temperature setpoint. Verify and document the following using an electrical test meter:

(b) The underslab electric resistance heater is on.

Step 3: Using the control system, change the control system's time and date corresponding to the local utility's summer on-peak period. If control system only accounts for time, set system time corresponding to the local utility's summer on-peak period. Verify and document the following using an electrical test meter:

(c) The underslab electric resistance heater is off.

Step 4: Restore system to correct schedule and control setpoints.

NA7.10.2 Evaporators and Evaporator Fan Motor Variable Speed Control

NA7.10.2.1 Construction Inspection

Prior to functional testing, document the following on all evaporators:

(a) All refrigerated space temperature sensors used for control are verified to read accurately (or provide an appropriate offset) using a temperature standard.

(b) All refrigerated space humidity sensors used for control are verified to read accurately (or provide an appropriate offset) using a humidity standard.

(c) All refrigerated space temperature and humidity sensors are verified to be mounted in a location away from direct evaporator discharge air draft.

(d) Verify that all fans motors are operational and rotating in the correct direction.

(e) Verify that fan speed control is operational and connected to evaporator fan motors.

(f) Verify that all speed controls are in "auto" mode.

NA7.10.2.2 Functional Testing

Conduct and document the following functional tests on all evaporators.

Step 1: Measure current space temperature or humidity. Program this temperature or humidity as the test temperature or humidity setpoint into the control system for the functional test steps. Allow 5 minutes for system to normalize.

Step 2: Using the control system, lower test temperature or humidity setpoint in 1 degree or 1% RH increments below any control dead band range until:

(a) Evaporator fan controls modulate to increase fan motor speed.

(b) Evaporator fan motor speed increases in response to controls.

(c) Verify and document the above.

Step 3: Using the control system, raise the test temperature or humidity setpoint in 1 degree or 1% RH increments above any control dead band range until fans go to minimum speed. Verify and document the following:

(d) Evaporator fan controls modulate to decrease fan motor speed.

(e) Evaporator fan motor speed decreases in response to controls.

(f) Minimum fan motor control speed (rpm or percent of full speed).

Step 4: Restore control system to correct control setpoints.

NA7.10.3 Condensers and Condenser Fan Motor Variable Speed Control

NA7.10.3.1 Evaporative Condensers and Condenser Fan Motor Variable Speed Control

NA7.10.3.1.1 Construction Inspection

Prior to functional testing, document the following:

(a) Verify the minimum condensing temperature control setpoint is at or below 70°F.

(b) Verify the master system controller saturated condensing temperature input is the temperature equivalent reading of the condenser pressure sensor.

(c) Verify all drain leg pressure regulator valves are set below the minimum condensing temperature/pressure setpoint.

(d) Verify all receiver pressurization valves, such as the outlet pressure regulator (OPR), are set lower than the drain leg pressure regulator valve setting.

(e) Verify all condenser inlet and outlet pressure sensors read accurately (or provide an appropriate offset) using a pressure standard.

(f) Verify all ambient dry bulb temperature sensors used by controller read accurately (or provide an appropriate offset) using a temperature standard.

(g) Verify all relative humidity sensor used by controller read accurately (or provide an appropriate offset) using RH standard.

(h) Verify all temperature sensors used by the controller are mounted in a location that is not exposed to direct sunlight.

(i) Verify that all sensor readings used by the condenser controller convert or calculate to the correct conversion units at the controller (e.g., saturated pressure reading is correctly converted to appropriate saturated temperature; dry bulb and relative humidity sensor readings are correctly converted to wet bulb temperature, etc.).

(j) Verify that all fan motors are operational and rotating in the correct direction.

(k) Verify that all condenser fan speed controls are operational and connected to condenser fan motors to operate in unison the fans serving a common condenser loop.

(l) Verify that all speed controls are in "auto" mode.

NA7.10.3.1.2 Functional Testing

Note: The system cooling load must be sufficiently high to run the test. Artificially increase evaporator loads or decrease compressor capacity (manually turn off compressors, etc.) as may be required to perform the Functional Testing.

Step 1: Override any heat reclaim, floating suction pressure, floating head pressure and defrost functionality before performing functional tests.

Step 2:

(a) Document current outdoor ambient air dry bulb and wet bulb temperatures, relative humidity and refrigeration system condensing temperature/condensing pressure readings from the control system.

(b) Calculate and document the temperature difference (TD), defined as the difference between the wet bulb temperature and the refrigeration system saturated condensing temperature (SCT).

(c) Document current head pressure control setpoint.

Step 3: Using the desired condenser fan motor cycling or head pressure control strategy, program into the control system a setpoint equal to the reading or calculation obtained in Step 2. This will be referred to as the "test setpoint." Allow 5 minutes for condenser fan speed to normalize.

Step 4: Using the control system, raise the test setpoint in 1 degree (or 3 psi) increments until the condenser fan control modulates to minimum fan motor speed. Verify and document the following:

(d) Fan motor speed decreases.

(e) All condenser fan motors serving common condenser loop decrease speed in unison in response to controller output.

(f) Minimum fan motor control speed (rpm or percent of full speed).

(g) If the refrigeration system is already operating at minimum saturated condensing temperature/head pressure, reverse Steps 4 and 5.

Step 5: Using the control system, lower the test setpoint in 1 degree (or 3 psi) increments until the condenser fan control modulates to increase fan motor speed. Verify and document the following:

(h) Fan motor speed increases.

(i) All condenser fan motors serving common condenser loop increase speed in unison in response to controller output.

Step 6: Document the current minimum condensing temperature setpoint. Using the control system, change the minimum condensing temperature setpoint to a value greater than the current operating condensing temperature. Verify and document the following:

(j) Condenser fan controls modulate to decrease capacity.

(k) All condenser fans serving common condenser loop modulate in unison.

(l) Condenser fan controls stabilize within a 5 minute period.

Step 7: Using the control system, reset the system head pressure controls, fan motor controls and minimum condensing temperature control setpoint to original settings documented in Steps 3 and 6.

Step 8: Restore any heat reclaim, floating suction pressure, floating head pressure and defrost functionality. Reset the minimum condensing temperature setpoint to the value documented in Step 6.

NA7.10.3.2 Air-Cooled Condensers and Condenser Fan Motor Variable Speed Control

Conduct and document the following functional tests on all air-cooled condensers.

NA7.10.3.2.1 Construction Inspection

Prior to functional testing, document the following:

(a) Verify that the minimum condensing temperature control setpoint is at or below 70°F.

(b) Verify that the master system controller saturated condensing temperature input is the temperature equivalent reading of the condenser pressure sensor.

(c) Verify all drain leg pressure regulator valves are set below the minimum condensing temperature/pressure setpoint.

(d) Verify all receiver pressurization valves, such as the outlet pressure regulator (OPR), are set lower than the drain leg pressure regulator valve setting.

(e) Verify all condenser inlet and outlet pressure sensors read accurately (or provide an appropriate offset) using a pressure standard.

(f) Verify all ambient dry bulb temperature sensors used by controller read accurately (or provide an appropriate offset) using temperature standard.

(g) Verify all temperature sensors used by the controller are mounted in a location that is not exposed to direct sunlight.

(h) Verify that all sensor readings used by the condenser controller convert or calculate to the correct conversion units at the controller (e.g., saturated pressure reading is correctly converted to appropriate saturated temperature, etc.)

(i) Verify that all fan motors are operational and rotating in the correct direction.

(j) Verify that all condenser fan speed controls are operational and connected to condenser fan motors to operate in unison the fans serving a common condenser loop.

(k) Verify that all speed controls are in "auto" mode.

NA7.10.3.2.2 Functional Testing

Note: The system cooling load must be sufficiently high to run the test. Artificially increase evaporator loads or decrease compressor capacity (manually turn off compressors, etc.) as may be required to perform the Functional Testing.

Step 1: Override any heat reclaim, floating suction pressure, floating head pressure and defrost functionality before performing functional tests.

Document current outdoor ambient air dry bulb temperature and refrigeration system condensing temperature/condensing pressure readings from the control system.

Step 2: Calculate and document the temperature difference (TD), defined as the difference between the dry bulb temperature and the refrigeration system saturated condensing temperature (SCT).

Document current head pressure control setpoint.

Step 3: Using the desired condenser fan motor cycling or head pressure control strategy, program into the control system a setpoint equal to the reading or calculation obtained in Step 2.

This will be referred to as the "test setpoint." Allow 5 minutes for condenser fan speed to normalize.

Step 4: Using the control system, raise the test setpoint in 1 degree (or 3 psi) increments until the condenser fan control modulates to minimum fan motor speed. Verify and document the following:

(a) Fan motor speed decreases.

(b) All condenser fan motors serving common condenser loop decrease speed in unison in response to controller output.

(c) Minimum fan motor control speed (rpm or percent of full speed).

(d) If the refrigeration system is already operating at minimum saturated condensing temperature/head pressure, reverse Steps 4 and 5.

Step 5: Using the control system, lower the test setpoint in 1 degree (or 3 psi) increments until the condenser fan control modulates to increase fan motor speed. Verify and document the following:

(a) Fan motor speed increases.

(b) All condenser fan motors serving common condenser loop increase speed in unison in response to controller output.

Step 6: Document current minimum condensing temperature setpoint. Using the control system change the minimum condensing temperature setpoint to a value greater than the current operating condensing temperature. Verify and document the following:

(a) Condenser fan controls modulate to decrease capacity.

(b) All condenser fans serving common condenser loop modulate in unison.

(c) Condenser fan controls stabilize within a 5 minute period.

Step 7: Using the control system, reset the system head pressure controls, fan motor controls and minimum condensing temperature control setpoint to original settings documented in Steps 3 and 6.

Step 8: Restore any heat reclaim, floating suction pressure, floating head pressure and defrost functionality. Reset the minimum condensing temperature setpoint to the value documented in Step 6.

NA7.10.3.3 Adiabatic Condensers and Condenser Fan Motor Variable Speed Control

Conduct and document the following functional tests on all adiabatic condensers.

NA7.10.3.3.1 Construction Inspection

Prior to functional testing, document the following:

(a) Verify the control system minimum Saturated Condensing Temperature (SCT) setpoint is at or below 70°F.

(b) Verify the control system maximum SCT setpoint (if used) is at or near the system design SCT.

(c) Verify accuracy of refrigerant pressure-temperature conversions and consistent use of either temperature or pressure for the controlled variable setpoint in the control system.

(d) Verify the discharge pressure sensor (or condenser pressure if used) reads accurately, using a National Institute of Standards and Technology (NIST) traceable reference pressure gauge or meter. At the minimum, the discharge pressure sensor accuracy shall be verified at two different pressures within the typical operating range. Calibrate if needed. Replace if outside manufacturers recommended calibration range.

(e) Verify the ambient dry bulb temperature using a NIST traceable instrument, including verification of at least two different ambient readings. Calibrate if needed. Replace if outside manufacturer’s recommended calibration range.

(f) Verify all ambient dry bulb temperature sensors are not mounted in direct sunlight or is provided within a suitable solar shield.

(g) Verify that all sensor readings used by the condenser controller convert or calculate to the correct conversion units and are displayed at the controller (e.g., observed pressure reading is correctly converted to appropriate saturated temperature, etc.)

(h) Verify that all fan motors are operational and rotating in the correct direction.

(i) Verify that all condenser fan speed controls operate automatically in response to changes in both pressure (SCT) and ambient temperature.

NA7.10.3.3.2 Functional Testing

Note: The system cooling load must be sufficiently high, and ambient conditions sufficiently below design, to operate with all condenser fans in operation and observe controls in average conditions. Be cognizant of weather conditions in scheduling testing and, if necessary and possible, arrange to artificially increase or decrease evaporator loads in order to perform the Functional Testing at typical system conditions. The functional test shall be performed in dry mode.

Step 1: Verify mechanical controls and other strategies will not affect tests.

(a) Verify condenser pressure low-limit holdback and/or bypass regulating valves, if any, are set below the minimum SCT setpoint. Condenser pressure controls valves will cause fans to operate at 100% speed if they are not set below the minimum SCT value. In warm weather, this may require setting out of range, and deferring valve settings until cold weather allows valves to be adjusted.

(b) Turn off any heat reclaim controls and any intermittent defrost pressure offset strategies that would affect condenser setpoint control.

(c) Document adiabatic mode switching setpoints, if necessary for test temporarily change the adiabatic mode setpoint such that the condenser operates in dry mode. Verify that the adiabatic pads are completely dry before beginning tests.

Step 2: Operate in control range and verify

(a) Verify the condenser control value is operating in the variable setpoint control range, i.e. above the minimum SCT setpoint and below the maximum SCT setpoint.

i. If necessary, increase or decrease the system load.

ii. If necessary, during low load or low ambient conditions with system observed at the minimum SCT, temporarily adjust the minimum SCT to a lower value, if the refrigeration system design will allow, or increase the control TD to result in a higher control value.

(b) Observe control operation for at least 30 minutes to confirm stable control operation, as shown by condenser fan speed varying as compressor capacity changes, and not ranging from maximum to minimum fan speed or constant “hunting”. If required, adjust control response setpoints to achieve stable operation. Since condenser control settings require fine-tuning over time, this is often accomplished using control system history or visual trends, showing one hourly and daily operation.

Step 3: Identify control Temperature Difference

(a) Record the current outdoor ambient air dry bulb and refrigeration system condensing temperature/condensing pressure readings from the control system. Note whether discharge pressure or a dedicated condenser pressure sensor is used for condenser pressure control.

(b) Document current head pressure control setpoints, including the Temperature Difference (TD) setpoint.

(c) Calculate and record the actual observed TD, defined as the difference between the dry bulb temperature and the refrigeration system SCT.

(d) Confirm agreement between the current control system TD setpoint and the observed TD. If values are different, address and correct controls system methods.

Step 4: Test adjusted control Temperature Difference (Setpoint1).

(a) Enter a smaller TD value into the control system sufficient enough to cause an observable response, such as 1 to 2 degrees smaller, but not small enough to cause the system to operate continuously at 100% fan speed. Record this value as TD Test Setpoint 1.

(b) Observe change in control system operation which should include an increase in fan speed and a decrease in condensing temperature.

(c) Allow time for the control system to achieve stable operation.

(d) Document current head pressure control setpoints, including the TD setpoint.

(e) Calculate and record the actual observed TD, defined as the difference between the wet bulb temperature and the refrigeration system SCT.

(f) Confirm agreement between the current control system TD setpoint and the observed TD. If values are different, address and correct control system methods.

Step 5: Test adjusted control Temperature Difference (Setpoint2) Enter a TD value into the control system that is different from TD Test Setpoint1, sufficient enough to cause an observable response. Record this value a TD Test Setpoint2.

(a) Observe change in control system operation which should include an increase in fan speed and a decrease in condensing temperature.

(b) Allow time for the control system to achieve stable operation.

(c) Record the current outdoor ambient dry bulb temperature.

(d) Record the current refrigeration system condensing temperature/condensing pressure readings from the control system.

(e) Document current head pressure control setpoints, including the TD setpoint.

(f) Calculate and record the actual observed TD, defined as the difference between the dry bulb temperature and the refrigeration system SCT.

(g) Confirm agreement between the current control system TD setpont and the observed TD. If values are different, address and correct control system methods.

Step 6: Document current minimum condensing temperature setpoint. Using the control system change the minimum condensing temperature setpoint to a value greater than the current operating condensing temperature. Verify and document the following:

(a) Condenser fan controls modulate to decrease capacity.

(b) All condenser fans serving common condenser loop modulate in unison.

(c) Condenser fan controls stabilize within a 5 minute period.

Step 7: Using the control system, reset the system head pressure controls, fan motor controls and minimum condensing temperature control setpoint to original settings documented in Steps 3 and 6.

Step 8: Restore any heat reclaim, floating suction pressure, floating head pressure and defrost functionality. Reset the minimum condensing temperature setpoint to the value documented in Step 6.

NA7.10.4 Variable Speed Screw Compressors

Conduct and document the following functional tests on all variable-speed screw compressors.

NA7.10.4.1 Construction Inspection

Prior to functional testing, document the following:

(a) Verify all single open-drive screw compressors dedicated to a suction group have variable speed control.

(b) Verify all compressor suction and discharge pressure sensors read accurately (or provide an appropriate offset) using a standard.

(c) Verify all input or control temperature sensors used by controller read accurately (or provide an appropriate offset) using temperature standard.

(d) Verify that all sensor readings used by the compressor controller convert or calculate to the correct conversion units at the controller (e.g., saturated pressure reading is correctly converted to appropriate saturated temperature, etc.).

(e) Verify that all compressor speed controls are operational and connected to compressor motors.

(f) Verify that all speed controls are in “auto” mode.

(g) Verify that compressor panel control readings for “RPMs,” “% speed,” “kW”, and “amps” match the readings from the PLC or other control systems.

(h) Verify that compressor nameplate data is correctly entered into the PLC or other control system.

NA7.10.4.2 Functional Testing

Note: The system cooling load must be sufficiently high to run the test. Artificially increase or decrease evaporator loads (add or shut off zone loads, change setpoints, etc.) as may be required to perform the Functional Testing.

Step 1: Override any heat reclaim, floating suction pressure, floating head pressure and defrost functionality before performing functional tests.

Step 2: Measure and document the current compressor operating suction pressure and saturated suction temperature.

Step 3: Document the suction pressure/saturated suction temperature setpoint. Program into the control system a target setpoint equal to the current operating condition measured in Step 2. Allow 5 minutes for system to normalize. This will be referred to as the "test suction pressure/saturated suction temperature setpoint."

Step 4: Using the control system, raise the test suction setpoint in 1 psi increments until the compressor controller modulates to decrease compressor speed. Verify and document the following:

(a) Compressor speed decreases.

(b) Compressor speed continues to decrease to minimum speed.

(c) Any slide valve or other unloading means does not unload until after the compressor has reached its minimum speed (RPM).

Step 5: Using the control system, lower the test suction setpoint in 1 psi increments until the compressor controller modulates to increase compressor speed. Verify and document the following:

(d) Any slide valve or other unloading means first goes to 100 percent before compressor speed increases from minimum.

(e) Compressor begins to increase speed.

(f) Compressor speed continues to increase to 100 percent.

Step 6: Using the control system, program the suction target setpoints back to original settings as documented in Step 3.

Step 7: Restore any heat reclaim, floating suction pressure, floating head pressure and defrost functionality.

NA7.11 Commercial Kitchen Exhaust System Acceptance Tests

NA7.11.1 Kitchen Exhaust Systems with Type I Hood Systems

The following acceptance tests apply to commercial kitchen exhaust systems with Type I exhaust hoods. All Type I exhaust hoods used in commercial kitchens shall be tested.

NA7.11.1.1 Construction Inspection

Step 1: Verify exhaust and replacement air systems are installed, power is installed and control systems such as demand control ventilation are calibrated.

Step 2: For kitchen/dining facilities having total Type 1 and Type II kitchen hood exhaust airflow rates greater than 5,000 cfm, calculate the maximum allowable exhaust rate for each Type 1 hood as specified by Table 140.9-A.

NA7.11.1.2 Functional Testing at Full Load Conditions

The following acceptance test applies to systems with and without demand control ventilation exhaust systems. These tests shall be conducted at full load conditions.

Step 1: Operate all sources of outdoor air providing replacement air for the hoods.

Step 2: Operate all sources of recirculated air providing conditioning for the space in which the hoods are located.

Step 3: Operate all appliances under the hoods at operating temperatures.

Step 4: Verify that the thermal plume and smoke is completely captured and contained within each hood at full load conditions by observing smoke or steam produced by actual cooking operation and/or by visually seeding the thermal plume using devices such as smoke candles or smoke puffers. Smoke bombs shall not be used (note: smoke bombs typically create a large volume of effluent from a point source and do not necessarily confirm whether the cooking effluent is being captured). For some appliances (e.g., broilers, griddles, fryers), actual cooking at the normal production rate is a reliable method of generating smoke). Other appliances that typically generate hot moist air without smoke (e.g., ovens, steamers) need seeding of the thermal plume with artificial smoke to verify capture and containment.

Step 5: Verify that space pressurization is appropriate (e.g. kitchen is slightly negative relative to adjacent spaces and all doors open/close properly).

Step 6: Verify that each Type 1 hood has an exhaust rate that is below the maximum allowed.

Step 7: Make adjustments as necessary until full capture and containment and adequate space pressurization are achieved and maximum allowable exhaust rates are not exceeded. Adjustments may include:

(a) Adjust exhaust hood airflow rates.

(b) Add hood side panels.

(c) Add rear seal (back plate).

(d) Increase hood overhang by pushing equipment back.

(e) Relocate supply outlets to improve the capture and containment performance.

Step 8: Measure and record final exhaust airflow rate per Type 1 hood.

NA7.11.1.3 Functional Testing for Exhaust Systems with Demand Control Ventilation

The following additional acceptance test shall be performed on all exhaust hoods with demand control ventilation exhaust systems.

Step 1: Turn off all kitchen hoods, makeup air and transfer systems.

Step 2: Turn on one of the appliances on the line and bring to operating temperature. Confirm that:

(a) DCV system automatically switches from off to the minimum flow setpoint.

(b) The minimum flow setpoint does not exceed the larger of:

1. 50% of the design flow, or
2. The ventilation rate required as specified by Section 120.1.

(c) The makeup air and transfer air system flow rates modulate as appropriate to match the exhaust rate.

(d) Appropriate space pressurization is maintained.

Step 3: Press the timed override button. Confirm that system ramps to full speed and back to minimum speed after override times out.

Step 4: Operate all appliances at typical conditions. Apply sample cooking products and/or utilize smoke puffers as appropriate to simulate full load conditions. Confirm that:

(e) DCV system automatically ramps to full speed.

(f) Hood maintains full capture and containment during ramping to and at full-speed.

(g) Appropriate space pressurization is maintained.

NA7.12 Parking Garage Ventilation System Acceptance Tests

NA7.12.1 Construction Inspection

Verify and document the following tests prior to the functional testing:

(a) Carbon monoxide control sensor is factory-calibrated as specified by Section 120.6(c).

(b) The sensor is located in the highest expected concentration location in its zone as specified by Section 120.6(c).

(c) Control setpoint is at or below the CO concentration permitted by Section 120.6(c).

NA7.12.2 Functional Testing

Conduct the following tests with garage ventilation system operating in occupied mode and with actual garage CO concentration well below setpoint.

Step 1: With all sensors active and all sensors reading below 25 ppm, observe that fans are at minimum speed and fan motor demand is no more than 30 percent of design wattage.

Step 2: Apply CO span gas with a concentration of 30 ppm, and a concentration accuracy of +/- 2%, one by one to 50% of the sensors but no more than 10 sensors per garage and to at least one sensor per proximity zone. For each sensor tested observe:

(a) CO reading is between 25 and 35 ppm.

(b) Ventilation system ramps to full speed when span gas is applied.

(c) Ventilation system ramps to minimum speed when span gas is removed.

Step 3: Temporarily override the programmed sensor calibration/replacement period to 5 minutes.

(d) Wait 5 minutes and observe that fans ramp to full speed and an alarm is received by the facility operators. Restore calibration/replacement period.

Step 4: Temporarily place the system in unoccupied mode and override the programmed unoccupied sensor alarm differential from 30% for 4 hours to 1% for 5 minutes. Wait 5 minutes and observe that fans ramp to full speed and an alarm is received by the facility operators. Restore programming.

Step 5: Temporarily override the programmed occupied sensor proximity zone alarm differential from 30% for 4 hours to 1% for 5 minutes. Wait 5 minutes and observe that fans ramp to full speed and an alarm is received by the facility operators. Restore programming.

NA7.13 Compressed Air System Acceptance Tests

NA7.13.1 Compressed Air Control System

Acceptance tests for compressed air controls in accordance with Section 120.6(e)2.

NA7.13.1.1 Construction Inspection

Verify and document the following prior to functional testing:

(a) Size (hp), rated capacity (acfm), and control type of each air compressor.

(b) Total system capacity (the sum of the individual capacities).

(c) System operating pressure.

(d) Compressor(s) designated as trim compressors.

(e) Method for observing and recording the states of each compressor in the system, which shall include at least the following states:

Off

Unloaded

Partially loaded

Fully loaded

Short cycling (loading and unloading more often than once per minute)

Blow off (venting compressed air at the compressor itself)

NA7.13.1.2 Functional Testing

Step 1: As specified by the test methods outlined in the Construction Inspection, verify that these methods have been employed, so that the states of the compressors and the current air demand (as measured by a flow sensor or otherwise inferred by system measurements) can be observed and recorded during testing.

Step 2: Run the compressed air supply system steadily at as close to the expected operational load range as can be practically implemented, for a duration of at least 10 minutes.

Step 3: Observe and record the states of each compressor and the current air demand during the test.

Step 4: Confirm that the combinations of compressors states meet the following criteria:

(a) No compressor exhibits short-cycling (loading and unloading more often than once per minute).

(b) No compressor exhibits blowoff (venting compressed air at the compressor itself).

(c) For new systems, the trim compressors shall be the only compressors partially loaded, while the base compressors will either be fully loaded or off by the end of the test.

NA7.13.2 Compressed Air Monitoring

Acceptance tests for compressed air monitoring installed in accordance with Section 120.6(e)3.

NA7.13.2.1 Construction Inspection

Verify and document the following monitoring system capabilities prior to functional testing:

(a) Measurement of header or compressor discharge pressure.

(b) Measurement of amps or power of each compressor.

(c) Measurement or determination of airflow in cfm.

(d) Data logging of pressure, power, airflow, and calculated compressed air system specific efficiency in kW/100 cfm at intervals of 5 minutes or less.

(e) Maintained data storage.

(f) Visual trending display of each recorded point, load, and specific efficiency.

NA7.13.2.2 Functional Testing

Verify and document the following monitoring system capabilities:

(a) Data observed during test is being recorded to a log file that can be opened and viewed to see trend of airflow, power, and specific efficiency in at least 5 minute intervals.

(d) Airflow and compressor power data vary with loading and unloading of the compressor within typical performance expectations. Measurements should be observed across various loading, whether manually varied in response to actual operational loads.

NA7.14 Elevator Lighting and Ventilation Controls

NA7.14.1 Construction Inspection

Verify and document the following prior to functional testing:

a) The occupancy sensor has been located to minimize false signals, and the elevator cab does not have any obstructions that could adversely affect the sensor's performance.

b) For PIR sensors, the sensor pattern does not enter into the elevator lobby.

c) For ultrasonic sensors, the sensor does not emit audible sound.

Note that some elevators are able to use weight sensors to provide occupancy sensing. In this case, document that the elevator uses weight sensing to provide occupant sensing and proceed to the functional test.

NA7.14.2 Functional Testing

For each elevator cab being tested, confirm the following:

a) Verify that the lighting and ventilation controlled inside the elevator cab turn off after 15 minutes from the start of an unoccupied condition.

b) Verify that the signal sensitivity is adequate to achieve desired control. The sensor should not detect motion in the elevator lobby.

c) Verify that lighting and ventilation immediately turn "on" when an unoccupied condition becomes occupied.

d) Verify that the lighting and ventilation will not shut off when occupied. Stand in the elevator with the door closed and wait 15 minutes to confirm that the lighting and ventilation remain on.

NA7.15 Escalator and Moving Walkway Speed Control

NA7.15.1 Construction Inspection

Verify and document the following prior to functional testing:

a) Variable speed drive is installed on the escalator.

b) Occupancy sensor has been located to minimize false signals.

c) Occupancy sensors do not trigger from pedestrians on adjacent escalators.

d) Occupancy sensors do not encounter any obstructions that could adversely affect desired performance.

e) Ultrasonic occupancy sensors do not emit audible sound

NA7.15.2 Functional Testing

For each escalator or moving walkway being tested, confirm the following:

a) Verify the amount of time necessary to ride the entire length of the escalator while standing still.

b) Stand away from the escalator. After being in an unoccupied condition for more than three times the length of time for a full ride, the escalator should slow down.

c) Approach the escalator entrance while in an unoccupied condition from multiple angles to ensure passenger detection cannot be bypassed.

d) Verify the slow speed setting is 10 ft/min.

e) Verify the full speed setting is below 100 ft/min.

f) Verify the acceleration and deceleration of speed changes. The acceleration shall not exceed 1 ft/sec sq.

g) Approach the escalator in an unoccupied condition at an average walking pace. The escalator should reach full speed before boarding.

h) Approach the escalator in an unoccupied condition at an average walking pace. The escalator should reach full speed before boarding. An alarm should signal to alert that the pedestrian is approaching in the wrong direction.

NA7.16 Lab Exhaust Ventilation System Acceptance Test

NA7.16.1 Construction Inspection for Wind Speed/Direction Control

Verify and document the following prior to functional testing:

(a) Wind speed and direction sensor is factory-calibrated (with calibration certificate) or field calibrated, as specified by Section 140.9(c)3C.

(b) The sensor is located in a location and at a height that is outside the wake region of nearby structures and experiences similar wind conditions to the free stream environment above the exhaust stacks as specified by Section 140.9(c)3C.

(c) The sensor is installed in close proximity to the fan that it will control so that it captures a representative wind speed/direction reading.

(d) The sensor is wired correctly to the controls to ensure proper control of volume flow rate.

(e) Wind speed/direction look-up table has been established and matches dispersion analysis results.

(f) Verify the methodology to measure volume flow rate:

1. Airflow sensor.
2. Static pressure as proxy.
3. Fan speed to volume flow rate curve.
4. Other.

NA7.16.2 Functional Testing for Wind Speed/Direction Control

Step 1: Simulate the minimum look-up table wind speed by either covering the sensor or overriding the curve points so the current wind speed is below the speed correlating to minimum volume flow rate at the stack.

(a) With all sensors active and all sensors reading below the minimum wind speed, observe minimum volume flow rate at the stack.

(b) Restore all curve points.

Step 2: Simulate a mid-range wind speed from the look-up table by either inducing a wind current, with an air speed accuracy of +/- 2%, or overriding the curve points so the current wind speed correlates to a mid-range volume flow rate at the stack.

(a) With all sensors active and all sensors reading a mid-range wind speed, observe corresponding mid-range volume flow rate at the stack.

(b) Restore all curve points.

Step 3: Simulate the maximum look-up table wind speed by either inducing a wind current, with an air speed accuracy of +/- 2%, or overriding the curve points so the current wind speed correlates to the maximum volume flow rate at the stack.

(a) With all sensors active and all sensors reading above the maximum wind speed, observe maximum volume flow rate at the stack.

(b) Restore all curve points.

Step 4: Temporarily override the programmed sensor calibration/replacement period to 5 minutes. Wait 5 minutes and observe that minimum volume flow rate at the stack is that at worst-case wind conditions and an alarm is received by the facility operators. Restore calibration/replacement period.

Step 5: Simulate sensor failure by disconnecting the sensor. Observe that minimum volume flow rate at the stack is that at worst-case wind conditions and an alarm is received by the facility operators. Reconnect sensor.

NA7.16.3 Construction Inspection for Contaminant Control

Verify and document the following tests prior to functional testing:

(a) Contaminant sensor is factory-calibrated (with calibration certificate) or field calibrated, as specified by Section 140.9(c)3D.

(b) The sensor is located within each exhaust plenum as specified by Section 140.9(c)3D.

(c) The sensor is wired correctly to the controls to ensure proper control of volume flow rate.

(d) Contaminant concentration threshold has been established and matches dispersion analysis results.

(e) Verify the methodology to measure volume flow rate:

1. Airflow sensor

2. Static pressure as proxy
3. Fan speed to volume flow rate curve
4. Other

(f) If multiple sensors are present, ensure fan is controlled based on the highest concentration reading.

NA7.16.4 Functional Testing For Contaminant Control

Step 1: Ensure no contaminant event is present. Simulate minimum exhaust air demand in all lab spaces.

Verify that the volume flow rate at the stack is at or above the minimum non-event value.

Step 2: Increase exhaust air demand at the lab spaces.

Verify that the volume flow rate at the stack is at or above the minimum non-event value.

Step 3: Simulate minimum exhaust air demand in all lab spaces. Simulate a contaminant event.

Verify that the volume flow rate at the stack is at or above the minimum event value.

Step 4: Increase exhaust air demand at the lab spaces.

Verify that the volume flow rate at the stack is at or above the minimum event value.

Step 5: Temporarily override the programmed sensor calibration/replacement period to 5 minutes. Wait 5 minutes and observe that minimum volume flow rate at the stack is that of a contaminant event and an alarm is received by the facility operators. Restore calibration/replacement period.

Step 6: Simulate sensor failure by disconnecting the sensor. Observe that minimum volume flow rate at the stack is that of a contaminant event and an alarm is received by the facility operators. Reconnect sensor.

NA7.17 Fume Hood Automatic Sash Closure System Acceptance Test

NA7.17.1 Construction Inspection

Verify and document the following prior to functional testing:

a) The fume hood sash zone presence sensor has a valid factory calibration certificate.

b) Each fume hood sash obstruction sensor has a valid factory calibration certificate.

c) Presence sensor has been located and adjusted to minimize false signals.

d) Presence sensor pattern does not enter adjacent zones.

e) Sash obstruction sensor has been installed per manufacturer instructions.

f) Presence sensor has been installed per manufacturer instructions.

NA7.17.2 Functional Testing

For each sash closure control system to be tested, perform the following:

a) Test auto close operation. Verify and document the following:

   1. Open the sash to maximum position or sash stop, whichever is lower.
   2. Vacate zone presence sensor range to simulate unoccupied state and confirm that sash closes automatically to minimum, closed position within 5 minutes.
   3. Verify that the presence sensor does not trigger a false signal from movement in an area adjacent to the space containing the controlled sash.

b) Confirm that the manual controls are operational. Verify and document the following:

   Open Test

   1. If equipped, disable any auto open control mode.
   2. Close sash to its minimum, closed position and confirm that it does not open automatically with triggering of the zone presence sensor.
   3. If equipped, open the sash using a push button, foot pedal, or similar mechanism, confirming that the sash raises to the maximum position or sash stop. Otherwise, manually open the sash by hand.

   Closed Test

   1. If equipped, press the button that closes the sash and ensure that the sash closes to the minimum, closed height. Otherwise close by hand.
   2. If equipped, while the sash is closing, trigger the stop button, verify the sash stops immediately when the stop button is activated.

c) Confirm that the sash object detection controls are operational. Verify and document the following:

   1. Open the sash to its maximum position or sash stop, whichever is lower.

2. Place a transparent object in the pathway of the sash and simulate an unoccupied state by vacating the zone presence sensor range. Verify that the sash does not close automatically on the object within the closing time delay setting (maximum of 5 minutes).
3. Open the sash to its maximum position or sash stop, whichever is lower, without any obstructions in the path of the sash.
4. Simulate an unoccupied state by vacating the zone presence sensor range. When the sash begins to automatically close, insert a transparent object into the path of the sash and verify that the sash stops before contacting the object.

d) Confirm that net downward force is not more than 10 pounds when closing. Verify and document the following:

1. Disable object detection controls.
2. Place scale in sash opening of fume hood.
3. Close sash manually.
4. Sash closing force shall not exceed 10 pounds as measured by scale.
5. Repeat test with sash closing initiated by vacancy being detected by presence sensor.

NA7.18 Multifamily Building Acceptance Tests

NA7.18.1 Dwelling Unit Ventilation System Acceptance

NA7.18.1.1 Dwelling Unit Ventilation Acceptance

NA7.18.1.1.1 Construction Inspection

Prior to functional testing, verify and document the following:

a) System is designed to provide the required outside air when the unit is operating.

b) Specify the ventilation system type, such as balanced, supply or exhaust.

c) Specify the method of control.

d) Confirm the kitchen range hood is ventilated to outside.

e) Record the kitchen range hood manufacturer name and equipment model number

f) Confirm the kitchen range hood is HVI certified to perform in compliance.

g) Confirm HRV or ERV equipment is HVI certified to perform in compliance

NA7.18.1.1.2 Functional Testing

Step 1: Perform the required dwelling unit mechanical ventilation system verification procedure as specified by Reference Nonresidential Appendix NA2.2 to verify the dwelling unit ventilation systems conform~~s~~ to the requirements of Section 160.2(b)2.

Step 2: Obtain HERS Rater field verification as specified in Reference Nonresidential Appendix NA1.

NA7.18.2 Dwelling Unit Enclosure Leakage Acceptance

NA7.18.2.1 Construction Inspection

Prior to functional testing, verify and document the following:

a) Confirm the pressure boundary wall, ceiling, and floor penetrations are sealed.

b) Confirm all gaps around windows and doors are sealed.

c) Confirm all chases are sealed at floor level using a hard cover and the hard cover is sealed.

NA7.18.2.2 Functional Testing

Step 1: Perform the dwelling unit envelope air leakage procedure as specified by Reference Nonresidential Appendix NA2.3 to verify the dwelling unit ventilation airflow conforms to the requirements of Section 160.2(b)2.

Step 2: Obtain HERS Rater field verification as specified in Reference Nonresidential Appendix NA1.

NA7.18.3 Central Ventilation System Duct Leakage Acceptance

The objective of this procedure is to verify the leakage of a new central ventilation duct system that serves multiple dwelling units and provides continuous airflows or is part of a balanced ventilation system. The duct leakage shall be determined by pressurizing the entire duct system ducts to 50 Pa (0.2 inches water) with respect to outside for ducts serving more than six dwelling units, and to 25 Pa (0.1 inches water) with respect to outside for ducts serving two to six dwelling units. The following procedure shall be used for the fan pressurization tests:

Test procedure, based on ATSM 1554 Method D – Total duct leakage test.

NA7.18.3.1 Construction Inspection

Prior to functional testing, verify and document the following:

a) Confirm windows and other openings are open to connect the building to the outside.

b) Confirm HVAC dampers are in their normal operating positions (NOP).

NA7.18.3.2 Functional Testing

Step 1: Measure and record environmental data at the beginning and conclusion of each test including ambient temperature, indoor temperature and barometric pressure.

Step 2: Install static pressure probe in main plenum pointing into airstream induced by the test. If the test fan is on the roof, the static pressure probe will need to be connected to the measurement device at the test site with a tube long enough to make the connection.

Step 3: If the test fan is mounted inside, with the building open to the outside, use the building as reference pressure. If the test fan is located on the roof, use the outside as the reference pressure.

Step 4: Attach the test fan to the duct system

a) For roof top and wall mounted exhaust systems, remove the fan from the curb or opening and seal the test fan to the curb following test equipment manufacturer's instructions, making sure the dampers are open (NOP).

b) Alternatively, the test fan may be applied to a grille opening on the inside of the building following test equipment manufacturer's instructions.

Step 5: Temporarily seal the system including:

a) All of the grilles on the system using masking tape and air impermeable sheeting or duck mask made for this application.

b) Air handler access door or panel (do not use permanent sealing material, metal tape is acceptable).

c) For systems with an air handler with supply and return plenums, the entire duct system including the air- handler shall be included in the test.

Step 6: Adjust the test fan speed to maintain 25 Pa or 50 Pa at the static pressure probe location.

Step 7: Record the air flow (CFM) and temperature.

Step 8: Determine the nominal fan airflow using the product specifications of the installed equipment for the design static pressure.

Step 9: Divide the duct leakage flow by the nominal fan flow and convert to a percentage. If the duct leakage flow percentage is equal to or less than the target compliance criterion of 6% leakage the system passes.

The leakage test can be conducted at rough-in or after the grilles or registers are installed. If the leakage test is conduct at rough-in, the spaces between the grille or register boots and the wallboard shall be sealed, and at least one grille or register must be removed to verify proper sealing.

For compliance with the leakage requirements in Section 160.2(b)2Ci, an ATT shall identify a group of up to three central ventilation duct systems in the building from which a sample will be selected for testing.

NA7.18.4 Rated Central Ventilation System Heat Recovery or Energy Recovery Acceptance

The objective of this procedure is to verify the heat recovery ventilation (HRV) or energy recovery ventilation (ERV) requirement in multifamily buildings for compliance with Section 170.2(c)3Bvb, a central ERV/HRV serving multiple dwelling units.

NA7.18.4.1 Construction Inspection

Prior to functional testing, verify and document the following:

a) Confirm the total design ventilation airflow rate for the dwelling units served by the central ventilation system as required by Section 160.2(b)2Av.

b) Visually confirm that an ERV/HRV is installed and record the make and model.

NA7.18.4.2 Functional Testing

Step 1: Verify that the ERV/HRV can provide the airflow rate that meets the design ventilation airflow rate by checking its product specifications.

Step 2: Verify that the ERV/HRV's nominal sensible recovery efficiency is 67 percent or greater, by checking its product specifications or databases such as HVI, AHRI, etc.

Step 3: Verify that the ERV/HRV can meet the fan power requirements of Section 170.2(c), by checking its product specifications or databases such as HVI, AHRI, etc.

Step 4: Verify that the ERV/HRV has a recovery bypass or free cooling function by visual inspection and checking its product specifications. Verify that its recovery bypass or free cooling control capabilities meet the requirements in Section 170.2, Table 170.2-G.

Step 5: Conduct functional testing of the bypass function according to NA7.5.4.

NA7.19 Steam Trap Fault Detection Acceptance Tests

NA7.19.1 Steam Trap Fault Detection

Acceptance tests for steam trap fault detection in accordance with Section 120.6(i).

NA7.19.1.1 Construction Inspection

Verify and document the following steam trap system capabilities prior to functional testing:

a) Distribution system steam trap arrangement and connected steam line operating pressure subject to 120.6(i) were installed as designed including the presence of monitoring equipment, strainer, and blow-off valve.

b) Visual confirmation of the central steam trap monitoring system installation, operation and programmed as designed.

c) Confirm the central steam trap monitoring system displays status of all installed steam trap sensors with a descriptive label or cross-references to a look-up table with location of sensor.

NA7.19.1.2 Functional Testing

For steam systems with up to seven (7) steam traps required to have fault detection in accordance with Section 120.6(i), all steam traps would be tested. For steam systems with more

than seven (7) steam traps; sampling would include a minimum of 1 steam trap for each group of up to 7 additional steam traps. If the first steam trap in the sample group passes the acceptance test, the remaining steam traps in the sample group also pass. If the first steam trap in a sample group fails, the rest of the steam traps in that group must be tested. If any tested steam trap fault detection sensor fails it must be repaired, replaced, or adjusted until it passes the test.

For each fault detection sensor, test the following:

Step 1: Identify the status of the steam trap and note if the steam line is operational or non-operational at the time of the functional test.

Step 2: Confirm that central steam trap monitoring system is receiving a signal that reflects the status of the steam trap.

Step 3: Generate a fault at the steam trap sensor for each tested steam trap.

Step 4: Verify that the central steam trap monitoring system detects the fault and reports the fault detection to the operator.

Step 5: Reconnect steam trap sensor and verify the fault detection sensor is communicating with the central steam trap monitoring system.

Step 6: Verify that central steam trap monitoring system does not report a fault.

NA7.20 Transcritical CO_2 Systems Acceptance Tests

NA7.20.1 Transcritical CO_2 Gas Cooler and Gas Cooler Fan Motor Variable Speed Control for Refrigerated Warehouses and Commercial Refrigeration

The purpose of these tests is to confirm proper operation of gas cooler control, including variable speed fan operation and variable setpoint control logic, which are both important elements of floating head pressure control, with the intent to operate with the lowest total system energy (considering both compressors and gas cooler fan power) through the course of the year.

Note: Transcritical CO_2 refrigeration systems are unique in that they can operate in one of two modes: subcritical operation and supercritical operation. Subcritical operation generally occurs during periods where ambient conditions are below 75F to 80F, where high pressure CO_2 vapor will condense in the gas cooler and the refrigeration system will operate analogous to other mechanical refrigeration systems (rejecting heat at a constant pressure and temperature). Supercritical operation generally occurs during periods where ambient conditions are above 75F to 80F, where the high pressure CO_2 vapor will not condense (or partially condense) in the gas cooler, and pressure and temperature can vary semi-independently during the heat rejection process. Because these two modes of operation are based on ambient conditions, it may not be possible for the field technician to observe both subcritical and supercritical control strategies during a single acceptance test.

The field technician shall perform either the functional test outlined in NA7.20.1.1.2 or NA7.20.1.1.3 depending on the ambient conditions and resulting system operating mode at the time of the test. The construction inspection must be completed regardless of ambient conditions.

The following test methods are general in nature, with the understanding that refrigeration systems are commonly custom designed, with many design choices, as well as varying load profiles. For all of these reasons, a thorough understanding of both refrigeration system design and refrigeration control system operation is necessary to effectively conduct these tests.

The measurement devices used to verify the refrigeration system controls shall be calibrated to a NIST traceable reference, with a calibration reference dated within the past two years. The calibrated measurement devices to be used in these acceptance tests are called the "standard" and shall have the following measurement tolerances: The temperature measurement devices shall be calibrated to +/- 0.7°F between -30°F and 200°F. The pressure measurement devices shall be calibrated to +/- 7.5 psi between 0 and 1500 psig.

NA7.20.1.1 Air-Cooled and Adiabatic Gas Coolers and Gas Cooler Fan Motor Variable Speed Control

Conduct and document the following functional tests on all air-cooled and adiabatic gas coolers.

NA7.20.1.1.1 Construction Inspection

Prior to functional testing, verify and document the following:

(a) Verify the control system minimum saturated condensing temperature (SCT) setpoint is at or below 60°F. If the design saturated suction temperature (SST) of the intermediate suction group is greater than or equal to 30°F, verify the control system SCT setpoint is at or below 70°F.

(b) Verify accuracy of refrigerant pressure-temperature conversions and consistent use of either temperature or pressure for the controlled variable setpoint in the control system.

1. The condensing temperature has an equivalent pressure during subcritical operation.
2. Either pressure or temperature may be used in the control system as the controlled variable to maintain gas cooler pressure (condensing temperature) during subcritical operation, as long as the setpoint value is similarly expressed in pressure or temperature.
3. Documentation may be achieved through pictures of control system screens or control system documentation, supported by sample calculations of observed

pressures or temperatures and associated conversion values, as available in the control system interface.

(c) Verify the gas cooler outlet temperature sensor reads accurately, using a NIST traceable instrument, including verification of at least two different gas cooler outlet readings. Calibrate if needed. Replace if outside manufacturer's recommended calibration range. If multiple gas coolers are installed in parallel, ensure sensor is installed on the common header.

(d) Verify the discharge pressure sensor (or gas cooler pressure if used) reads accurately, using a NIST traceable reference pressure gauge or meter, and with pressure checked for at least two pressures within the typical operating range. Calibrate if needed. Replace if outside manufacturers recommended calibration range.

(e) Verify the ambient dry bulb temperature using a NIST traceable instrument, including verification of at least two different ambient readings. Calibrate if needed. Replace if outside manufacturer's recommended calibration range. If the ambient dry bulb temperature sensor is installed between the adiabatic pad and the gas cooler coil for adiabatic gas coolers, verification must be performed when operating in "dry" mode.

(f) Verify the ambient dry bulb temperature is not mounted in direct sunlight or is provided with a suitable solar shield. The ambient dry bulb temperature sensor may be installed between the adiabatic pad and the gas cooler coil for adiabatic gas coolers and is referred to as the precool air temperature sensor.

(g) Verify that all sensor readings used by the gas cooler controller display correct values at the controller, as well as derived values (e.g., observed pressure is correctly converted saturation temperature for CO_2)

(h) Verify that all fan motors are operational and rotating in the correct direction.

(i) Verify that gas cooler fan speed controls are operational and controlling all gas cooler fan motors in unison.

(j) Verify that all speed controls operate automatically in response to changes in pressure, gas cooler outlet temperature, and ambient dry bulb or precool air temperature.

(k) Verify the installation of the gas cooler holdback valve, which may be located near the inlet of the intermediate pressure vessel or near the outlet of the gas cooler.

NA7.20.1.1.2 Functional Testing (Option A: Subcritical Operation)

Planning: The system cooling load must be sufficiently high, and ambient conditions sufficiently below the critical point, to operate subcritically with all gas cooler fans in operation and observe controls in average conditions. Account for weather conditions in scheduling testing by, if

necessary, artificially increasing or decreasing evaporator loads in order to perform the Functional Testing at typical system conditions.

Step 1: Verify mechanical controls and other strategies will not affect tests

(a) Turn off any heat reclaim controls and any intermittent defrost pressure offset strategies that would affect gas cooler setpoint control.

(b) If testing an adiabatic gas cooler, adjust setpoints to ensure that the gas cooler stays in "dry" mode or "precool" mode consistently throughout the test.

Step 2: Operate in control range and verify stable control

(a) Verify the gas cooler control value is operating in the variable setpoint control range, i.e. above the minimum SCT setpoint and below the maximum SCT setpoint.

- If necessary, increase or decrease the system load.
- If necessary, during low load or low ambient conditions with system observed at the minimum SCT, temporarily adjust the minimum SCT to a lower value, if the refrigeration system design will allow, or increase the control TD to result in a higher control value.

(b) Observe control operation for at least 30 minutes to confirm stable control operation, as shown by gas cooler fan speed varying as compressor capacity changes, and not ranging from maximum to minimum fan speed or constant "hunting". If required, adjust control response setpoints to achieve stable operation.
Note: Since gas cooler control settings require fine-tuning over time, this is often accomplished using control system history or visual trends, showing one hourly and daily operation.

Step 3: Identify control TD

(a) Record the current outdoor ambient air dry bulb or precool air temperature and refrigeration system condensing temperature/condensing pressure readings from the control system. Note whether discharge pressure or a dedicated gas cooler pressure sensor is used for gas cooler pressure control.

(b) Document current head pressure control setpoints, including the TD setpoint.

(c) Calculate and record the actual observed temperature difference (TD), defined as the difference between the ambient dry bulb temperature or precool air temperature and the refrigeration system saturated condensing temperature (SCT).

(d) Confirm agreement between the current control system TD setpoint and the observed TD. If values are different, address and correct control system methods.

Step 4: Test adjusted control TD

(a) Enter a smaller TD value into the control system, sufficient to cause an observable response, such as 1-2 degrees smaller, but not small enough to cause system to operate continuously at 100% fan speed. Record this value as TD Test Setpoint 1.

(b) Observe change in control system operation which should include an increase in fan speed and a decrease in condensing temperature.

(c) Allow time for the control system to achieve stable operation.

(d) Document current head pressure control setpoints, including the TD setpoint.

(e) Calculate and record the actual observed temperature difference (TD), defined as the difference between the ambient dry bulb or precool air temperature and the refrigeration system saturated condensing temperature (SCT).

(f) Confirm agreement between the current control system TD setpoint and the observed TD. If values are different, address and correct control system methods.

(g) Perform the above test sequence with a second TD value, recorded as TD Test Setpoint 2, and record the same values above to confirm agreement between the current control system TD setpoint and the observed TD. If needed perform corrective actions and repeat testing until variable setpoint control can be confirmed and documented.

Step 5: Verify and document all fans operate in unison down to minimum SCT

(a) Document that all fans are in operation, fan speed, actual SCT and control system minimum SCT setpoint, by recording control system screens or trends along with observations.

1. In cool weather and/or light loads, this may be the observed operation during testing without need to manipulate system setpoints.
2. In warmer weather and/or higher loads, the control system minimum SCT value can be increased slowly to a value equal to, and then above, the current operating condition, in order to observe the fans operating in unison and fan speeds dropping as the minimum SCT setpoint is achieved.

Step 6: Restore setpoints

(a) Restore any heat reclaim or defrost functionality that was turned off to allow testing.

(b) Reset the minimum condensing temperature setpoint if it was adjusted during Step 5.

(c) Reset adiabatic mode controls to original values.

NA7.20.1.1.3 Functional Testing (Option B: Supercritical Operation)

Planning: Ambient conditions must be sufficiently above the critical point to operate supercritically. Account for weather conditions in scheduling testing by, if necessary,

artificially increasing or decreasing evaporator loads in order to perform the Functional Testing at typical system conditions.

Step 1: Verify mechanical controls and other strategies will not affect tests

(a) Turn off any heat reclaim controls and any intermittent defrost pressure offset strategies that would affect gas cooler setpoint control.

(b) If testing an adiabatic gas cooler, adjust setpoints to ensure that the gas cooler stays in "dry" mode or "precool" mode consistently throughout the test.

Step 2: Operate in supercritical mode and verify pressure control

(a) Observe operation for at least 30 minutes or reference control system history or visual trends to verify the gas cooler holdback valve modulates its opening in response to changes in ambient dry bulb or precool air temperature resulting in a change in gas cooler pressure. Fan speeds are allowed to operate fixed at 100% to maximize the temperature reduction of the outlet gas or modulate to maintain a temperature difference between the ambient dry bulb or precool air temperature and the gas cooler outlet temperature. Reference the original equipment manufacturer operating manual or sequence of operation descriptions to confirm the observed variation in the pressure setpoint is consistent with the design control strategy.

Step 3: Restore setpoints

(a) Restore any heat reclaim or defrost functionality that was turned off to allow testing.

(b) Reset adiabatic mode controls to original values.

(This page intentionally left blank.)

Nonresidential Appendix NA8

Appendix NA8 – Luminaire Power

NA8.1 Luminaire Power

The following tables contain a limited list of lamp and ballast combinations. These tables provide an alternate voluntary option to the provision in Section 130(c) for determining luminaire power for any lamp and ballast combination specifically listed in Appendix NA8. This appendix is not intended to list all possible lamp and ballast combinations, and shall not to be used to determine luminaire power for any lighting system not specifically listed in this appendix.

Table NA8-1 – Fluorescent U-Tubes

Type	Lamps - Number	Lamps - Designation	Ballasts - Number	Ballasts - Designation	Ballasts - Description	System Watts
2 ft. Fluorescent U-Tube T8	1	FB31T8/F32T8U	1	ELECT NO	Electronic Normal Output	39
2 ft. Fluorescent U-Tube T8	2	FB31T8/F32T8U	1	ELECT NO	Electronic Normal Output	62
2 ft. Fluorescent U-Tube T8	3	FB31T8/F32T8U	1	ELECT NO	Electronic Normal Output	92
2 ft. Fluorescent U-Tube T8	1	FB31T8/F32T8U	1	ELECT DIM	Electronic Dimming	33
2 ft. Fluorescent U-Tube T8	2	FB31T8/F32T8U	1	ELECT DIM	Electronic Dimming	64
2 ft. Fluorescent U-Tube T8	3	FB31T8/F32T8U	1	ELECT DIM	Electronic Dimming	93
2 ft. Fluorescent U-Tube T8	4	FB31T8/F32T8U	1	ELECT DIM	Electronic Dimming	116

NO = ballast factor 85 to 100%

Table NA8-2 – Fluorescent Linear Lamps T5

Type	Lamps - Number	Lamps Designation	Ballasts - Number	Ballasts - Designation	Ballasts - Description	System Watts
~23" Fluorescent Program Start T5 (14W)	1	F14T5	1	ELECT	Elect. Program Start BF=1	18
~23" Fluorescent Program Start T5 (14W)	2	F14T5	1	ELECT	Elect. Program Start BF=1	34
~34.5" Fluorescent Program Start T5 (21W)	1	F21T5	1	ELECT	Elect. Program Start BF=1	27
~34.5" Fluorescent Program Start T5 (21W)	2	F21T5	1	ELECT	Elect. Program Start BF=1	50
~46" Fluorescent Program Start T5 (28W)	1	F28T5	1	ELECT	Elect. Program Start BF=1	30
~46" Fluorescent Program Start T5 (28W)	2	F28T5	1	ELECT	Elect. Program Start BF=1	60
~58.5" Fluorescent Program Start T5 (35W)	1	F35T5	1	ELECT	Elect. Program Start BF=1	40
~58.5" Fluorescent Program Start T5 (35W)	2	F35T5	1	ELECT	Elect. Program Start BF=1	78
~23" Fluorescent Program Start T5 High Output (24W)	1	F24T5HO	1	ELECT	Elect. Program Start BF=1	29
~23" Fluorescent Program Start T5 High Output (24W)	2	F24T5HO	1	ELECT	Elect. Program Start BF=1	55
~34.5" Fluorescent Program Start T5 High Output(39W)	1	F39T5	1	ELECT	Elect. Program Start BF=1	43
~34.5" Fluorescent Program Start T5 High Output(39W)	2	F39T5	1	ELECT	Elect. Program Start BF=1	85
~46" Fluorescent Program Start T5 High Output (54W)	1	F54T5	1	ELECT	Elect. Program Start BF=1	62
~46" Fluorescent Program Start T5 High Output (54W)	2	F54T5	1	ELECT	Elect. Program Start BF=1	121
~46" Fluorescent Program Start T5 High Output (54W)	1	F54T5	1	ELECT DIM	Elect. Dimming	63
~46" Fluorescent Program Start T5 High Output (54W)	2	F54T5	1	ELECT DIM	Elect. Dimming	125
~57.5" Fluorescent Program Start T5 High Output (80W)	1	ºF80T5	1	ELECT	Elect. Program Start BF=1	90

Table NA8-3 – Fluorescent Rapid Start T-8

Type	Lamps - Number	Lamps - Designation	Ballasts Number	Ballasts - Designation	Ballasts - Description	System Watts
2 foot Fluorescent Rapid Start T8 (17W) Electronic Ballasts	1	F17T8	1	ELECT NO	Electronic Normal Output	22
2 foot Fluorescent Rapid Start T8 (17W) Electronic Ballasts	2	F17T8	1	ELECT NO	Electronic Normal Output	33
2 foot Fluorescent Rapid Start T8 (17W) Electronic Ballasts	3	F17T8	1	ELECT NO	Electronic Normal Output	53
2 foot Fluorescent Rapid Start T8 (17W) Electronic Ballasts	3	F17T8	2	ELECT NO	Electronic Normal Output	55
2 foot Fluorescent Rapid Start T8 (17W) Electronic Ballasts	4	F17T8	1	ELECT NO	Electronic Normal Output	63
2 foot Fluorescent Rapid Start T8 (17W)	1	F17T8	1	ELECT DIM	Electronic Dimming	20
2 foot Fluorescent Rapid Start T8 (17W)	2	F17T8	1	ELECT DIM	Electronic Dimming	37
2 foot Fluorescent Rapid Start T8 (17W)	3	F17T8	1	ELECT DIM	Electronic Dimming	56
2 foot Fluorescent Rapid Start T8 (17W)	4	F17T8	1	ELECT DIM	Electronic Dimming	69
3 foot Fluorescent Rapid Start T8 (25W) Electronic Ballasts	1	F25T8	1	ELECT NO	Electronic Normal Output	27
3 foot Fluorescent Rapid Start T8 (25W) Electronic Ballasts	2	F25T8	1	ELECT NO	Electronic Normal Output	48
3 foot Fluorescent Rapid Start T8 (25W) Electronic Ballasts	3	F25T8	1	ELECT NO	Electronic Normal Output	68
3 foot Fluorescent Rapid Start T8 (25W) Electronic Ballasts	4	F25T8	1	ELECT NO	Electronic Normal Output	89
3 foot Fluorescent Rapid Start T8 (25W) Electronic Ballasts	1	F25T8	1	ELECT RO	Electronic Reduced Output	24
3 foot Fluorescent Rapid Start T8 (25W) Electronic Ballasts	2	F25T8	1	ELECT RO	Electronic Reduced Output	41
3 foot Fluorescent Rapid Start T8 (25W) Electronic Ballasts	3	F25T8	1	ELECT RO	Electronic Reduced Output	59
3 foot Fluorescent Rapid Start T8 (25W) Electronic Ballasts	4	F25T8	1	ELECT RO	Electronic Reduced Output	76
3 foot Fluorescent Rapid Start T8 (25W) Electronic Ballasts	1	F25T8	1	ELECT HO	Electronic High Output	29

3 foot Fluorescent Rapid Start T8 (25W) Electronic Ballasts	2	F25T8	1	ELECT HO	Electronic High Output	51
3 foot Fluorescent Rapid Start T8 (25W) Electronic Ballasts	3	F25T8	1	ELECT HO	Electronic High Output	74
3 foot Fluorescent Rapid Start T8 (25W) Electronic Ballasts	1	F25T8	1	ELECT DIM	Electronic Dimming	25
3 foot Fluorescent Rapid Start T8 (25W) Electronic Ballasts	2	F25T8	1	ELECT DIM	Electronic Dimming	49
3 foot Fluorescent Rapid Start T8 (25W) Electronic Ballasts	3	F25T8	1	ELECT DIM	Electronic Dimming	76
3 foot Fluorescent Rapid Start T8 (25W) Electronic Ballasts	4	F25T8	1	ELECT DIM	Electronic Dimming	96

Table NA8-3 (continued) – Fluorescent Rapid Start T-8

4 foot Fluorescent Instant Start T8 (“Energy Saving” 30W)	1	F32T8/30ES	1	ELECT NO	Electronic Normal Output	29
4 foot Fluorescent Instant Start T8 (“Energy Saving” 30W)	2	F32T8/30ES	1	ELECT NO	Electronic Normal Output	54
4 foot Fluorescent Instant Start T8 (“Energy Saving” 30W)	3	F32T8/30ES	1	ELECT NO	Electronic Normal Output	79
4 foot Fluorescent Instant Start T8 (“Energy Saving” 30W)	4	F32T8/30ES	1	ELECT NO	Electronic Normal Output	104
4 foot Fluorescent Instant Start T8 (“Energy Saving” 30W)	1	F32T8/30ES	1	ELECT RO	Electronic Reduced Output	27
4 foot Fluorescent Instant Start T8 (“Energy Saving” 30W)	2	F32T8/30ES	1	ELECT RO	Electronic Reduced Output	48
4 foot Fluorescent Instant Start T8 (“Energy Saving” 30W)	3	F32T8/30ES	1	ELECT RO	Electronic Reduced Output	70
4 foot Fluorescent Instant Start T8 (“Energy Saving” 30W)	4	F32T8/30ES	1	ELECT RO	Electronic Reduced Output	91
4 foot Fluorescent Instant Start T8 (“Energy Saving” 30W)	1	F32T8/30ES	1	ELECT NO EE	EE Normal Output	33
4 foot Fluorescent Instant Start T8 (“Energy Saving” 30W)	2	F32T8/30ES	1	ELECT NO EE	Energy efficiency Normal Output	52
4 foot Fluorescent Instant Start T8 (“Energy Saving” 30W)	3	F32T8/30ES	1	ELECT NO EE	Energy efficiency Normal Output	77
4 foot Fluorescent Instant Start T8 (“Energy Saving” 30W)	4	F32T8/30ES	1	ELECT NO EE	Energy efficiency Normal Output	101
4 foot Fluorescent Instant Start T8 (“Energy Saving” 30W)	1	F32T8/30ES	1	ELECT RO EE	EE Reduced Output	28
4 foot Fluorescent Instant Start T8 (“Energy Saving” 30W)	2	F32T8/30ES	1	ELECT RO EE	EE Reduced Output	45
4 foot Fluorescent Instant Start T8 (“Energy Saving” 30W)	3	F32T8/30ES	1	ELECT RO EE	EE Reduced Output	66
4 foot Fluorescent Instant Start T8 (“Energy Saving” 30W)	4	F32T8/30ES	1	ELECT RO EE	EE Reduced Output	88

Table NA8-3 (continued) – Fluorescent Rapid Start T-8

4 foot Fluorescent Rapid Start T8 (32W)	1	F32T8	1	ELECT NO	Electronic Normal Output	32
4 foot Fluorescent Rapid Start T8 (32W)	2	F32T8	1	ELECT NO	Electronic Normal Output	62
4 foot Fluorescent Rapid Start T8 (32W)	3	F32T8	1	ELECT NO	Electronic Normal Output	93
4 foot Fluorescent Rapid Start T8 (32W)	4	F32T8	1	ELECT NO	Electronic Normal Output	114
4 foot Fluorescent Rapid Start T8 (32W)	1	F32T8	1	EE NO	EE Normal Output	35
4 foot Fluorescent Rapid Start T8 (32W)	2	F32T8	1	EE NO	EE Normal Output	55
4 foot Fluorescent Rapid Start T8 (32W)	3	F32T8	1	EE NO	EE Normal Output	82
4 foot Fluorescent Rapid Start T8 (32W)	4	F32T8	1	EE NO	EE Normal Output	107
4 foot Fluorescent Rapid Start T8 (32W)	1	F32T8	1	ELECT RO	Electronic Reduced Output	29
4 foot Fluorescent Rapid Start T8 (32W)	2	F32T8	1	ELECT RO	Electronic Reduced Output	51
4 foot Fluorescent Rapid Start T8 (32W)	3	F32T8	1	ELECT RO	Electronic Reduced Output	76
4 foot Fluorescent Rapid Start T8 (32W)	4	F32T8	1	ELECT RO	Electronic Reduced Output	98
4 foot Fluorescent Rapid Start T8 (32W)	2	F32T8	1	ELECT HO	Electronic High Output	77
4 foot Fluorescent Rapid Start T8 (32W)	3	F32T8	1	ELECT HO	Electronic High Output	112
4 foot Fluorescent Rapid Start T8 (32W)	1	F32T8	1	EE RO	EE Reduced Output	30
4 foot Fluorescent Rapid Start T8 (32W)	2	F32T8	1	EE RO	EE Reduced Output	48
4 foot Fluorescent Rapid Start T8 (32W)	3	F32T8	1	EE RO	EE Reduced Output	73
4 foot Fluorescent Rapid Start T8 (32W)	4	F32T8	1	EE RO	EE Reduced Output	96
4 foot Fluorescent Rapid Start T8 (32W)	2	F32T8	1	ELECT TL	Electronic Two Level (50 & 100%)	65
4 foot Fluorescent Rapid Start T8 (32W)	1	F32T8	1	ELECT DIM1	Electronic Dimming	35
4 foot Fluorescent Rapid Start T8 (32W)	2	F32T8	1	ELECT DIM1	Electronic Dimming	68
4 foot Fluorescent Rapid Start T8 (32W)	3	F32T8	1	ELECT DIM1	Electronic Dimming	102
4 foot Fluorescent Rapid Start T8 (32W)	1	F32T8	1	ELECT DIM2	Electronic Dimming	33
4 foot Fluorescent Rapid Start T8 (32W)	2	F32T8	1	ELECT DIM2	Electronic Dimming	64
4 foot Fluorescent Rapid Start T8 (32W)	3	F32T8	1	ELECT DIM2	Electronic Dimming	93
4 foot Fluorescent Rapid Start T8 (32W)	4	F32T8	1	ELECT DIM2	Electronic Dimming	116
5 foot Fluorescent Rapid Start T8 (40W)	1	F40T8	1	ELECT	Electronic	46

5 foot Fluorescent Rapid Start T8 (40W)	2	F40T8	1	ELECT	Electronic	79
5 foot Fluorescent Rapid Start T8 (40W)	3	F40T8	1	ELECT	Electronic	112

RO = ballast factor 70 to 85% NO = ballast factor 85 to 100% HO = ballast factor >100%

Table NA8-4 – Fluorescent Rapid Start High Output (HO) T8, 8 ft

Type	Lamps - Number	Lamps - Designation	Ballasts - Number	Ballasts - Designation	Ballasts - Description	System Watts
8 foot Fluorescent Rapid Start T8 High Output (86W)	1	F96T8/HO	1	ELECT	Electronic	88
8 foot Fluorescent Rapid Start T8 High Output (86W)	2	F96T8/HO	1	ELECT	Electronic	160

HO = ballast factor >100%

Table NA8-5 – High Intensity Discharge

Type	Lamps - Number	Lamps - Designation	Ballasts Number	Ballasts - Designation	Ballasts - Description	System Watts	Comment
Metal Halide	1	M35/39	1	MAG STD	Mag. Stand.	58	
Metal Halide	1	M35/39	1	ELECT	Electronic	44	
Metal Halide	1	M50	1	MAG STD	Mag. Stand.	67	
Metal Halide	1	M50	1	ELECT	Electronic	58	
Metal Halide	1	M70	1	MAG STD	Mag. Stand.	95	
Metal Halide	1	M70	1	ELECT	Electronic	86	
Metal Halide	1	M100	1	MAG STD	Mag. Stand.	130	
Metal Halide	1	M100	1	ELECT	Electronic	110	
Metal Halide	1	M150	1	MAG STD	Mag. Stand.	185	
Metal Halide	1	M150	1	ELECT	Electronic	168	
Metal Halide	1	M175	1	MAG STD	Mag. Stand.	208	
Metal Halide	1	M175	1	ELECT	Electronic	194	
Metal Halide	1	M200	1	MAG STD	Mag. Stand.	232	
Metal Halide	1	M250	1	MAG STD	Mag. Stand.	295	
Metal Halide	1	M250	1	ELECT	Electronic	269	
Metal Halide	1	M320	1	MAG STD	Mag. Stand.	368	
Metal Halide	1	M320	1	ELECT	Electronic	343	
Metal Halide	1	M360	1	MAG STD	Mag. Stand.	422	
Metal Halide	1	M400	1	MAG STD	Mag. Stand.	452	
Metal Halide	1	M400	1	ELECT	Electronic	430	
Metal Halide	1	M450	1	MAG STD	Mag. Stand.	508	
Metal Halide	1	M750	1	MAG STD	Mag. Stand.	818	
Metal Halide	1	M1000	1	MAG STD	Mag. Stand.	1080	
Metal Halide	1	M1500	1	MAG STD	Mag. Stand.	1605	
High Pressure Sodium	1	S35	1	MAG STD	Mag. Stand.	47	
High Pressure Sodium	1	S50	1	MAG STD	Mag. Stand.	66	
High Pressure Sodium	1	S70	1	MAG STD	Mag. Stand.	91	
High Pressure Sodium	1	S100	1	MAG STD	Mag. Stand.	128	
High Pressure Sodium	1	S150	1	MAG STD	Mag. Stand.	188	
High Pressure Sodium	1	S200	1	MAG STD	Mag. Stand.	230	
High Pressure Sodium	1	S250	1	MAG STD	Mag. Stand.	295	
High Pressure Sodium	1	S400	1	MAG STD	Mag. Stand.	464	
High Pressure Sodium	1	S1000	1	MAG STD	Mag. Stand.	1100	

Table NA8-6 –12 Volt Tungsten Halogen Lamps Including MR16, Bi-pin, AR70, AR111, PAR36

(Shall NOT apply to track lighting systems)

Type	Lamps - Number	Lamps - Designation	Ballasts - Number	Ballasts - Designation	Ballasts - Description	System Watts	Comment
High Pressure Sodium	1	20 watt lamp	1	ELECT	Electronic Power Supply	23	
High Pressure Sodium	1	25 watt lamp	1	ELECT	Electronic Power Supply	28	
High Pressure Sodium	1	35 watt lamp	1	ELECT	Electronic Power Supply	38	
High Pressure Sodium	1	37 watt lamp	1	ELECT	Electronic Power Supply	41	
High Pressure Sodium	1	42 watt lamp	1	ELECT	Electronic Power Supply	45	
High Pressure Sodium	1	50 watt lamp	1	ELECT	Electronic Power Supply	54	
High Pressure Sodium	1	65 watt lamp	1	ELECT	Electronic Power Supply	69	
High Pressure Sodium	1	71 watt lamp	1	ELECT	Electronic Power Supply	75	
High Pressure Sodium	1	75 watt lamp	1	ELECT	Electronic Power Supply	80	
High Pressure Sodium	1	20 watt lamp	1	MAG	Mag. Transformer	24	
High Pressure Sodium	1	25 watt lamp	1	MAG	Mag. Transformer	29	
High Pressure Sodium	1	35 watt lamp	1	MAG	Mag. Transformer	39	
High Pressure Sodium	1	37 watt lamp	1	MAG	Mag. Transformer	42	
High Pressure Sodium	1	42 watt lamp	1	MAG	Mag. Transformer	46	
High Pressure Sodium	1	50 watt lamp	1	MAG	Mag. Transformer	55	
High Pressure Sodium	1	65 watt lamp	1	MAG	Mag. Transformer	70	
High Pressure Sodium	1	71 watt lamp	1	MAG	Mag. Transformer	76	
High Pressure Sodium	1	75 watt lamp	1	MAG	Mag. Transformer	81	

(This page intentionally left blank.)